TECH NICAL BOOK

2020 COLLECTION

Bianchi

INDEX

TECHNICAL BOOK - 2020 COLLECTION

04 | ROAD
RACING
ENDURANCE
VIA NIRONE 7
TT & TRIATHLON
CYCLO-CROSS
VINTAGE
GRAVEL

108 | MTB
XC CROSS COUNTRY

148 | E-BIKE
E-ROAD / GRAVEL
E-MTB
E-CITY

208 | CITY FITNESS
C-SPORT
SPILLO
JUNIOR

229 | PARTS & ACCESSORIES

PRINTED IN ITALY | AUGUST 2019

COLOR YOUR RIDE

Bianchi

T A V O L O Z Z A

Bianchi Tavolozza is the exclusive web color configurator available for Bianchi CV models.
All frames personalized with Tavolozza color configurator, including graphics and logos, are hand-painted and decaled in Italy by expert craftsmen, combining Bianchi's timeless skills of tailoring together with advanced technologies.

TAVOLOZZA IS FOR:

SPECIALISSIMA

OLTRE XR4

AQUILA CV

METHANOL CV RS

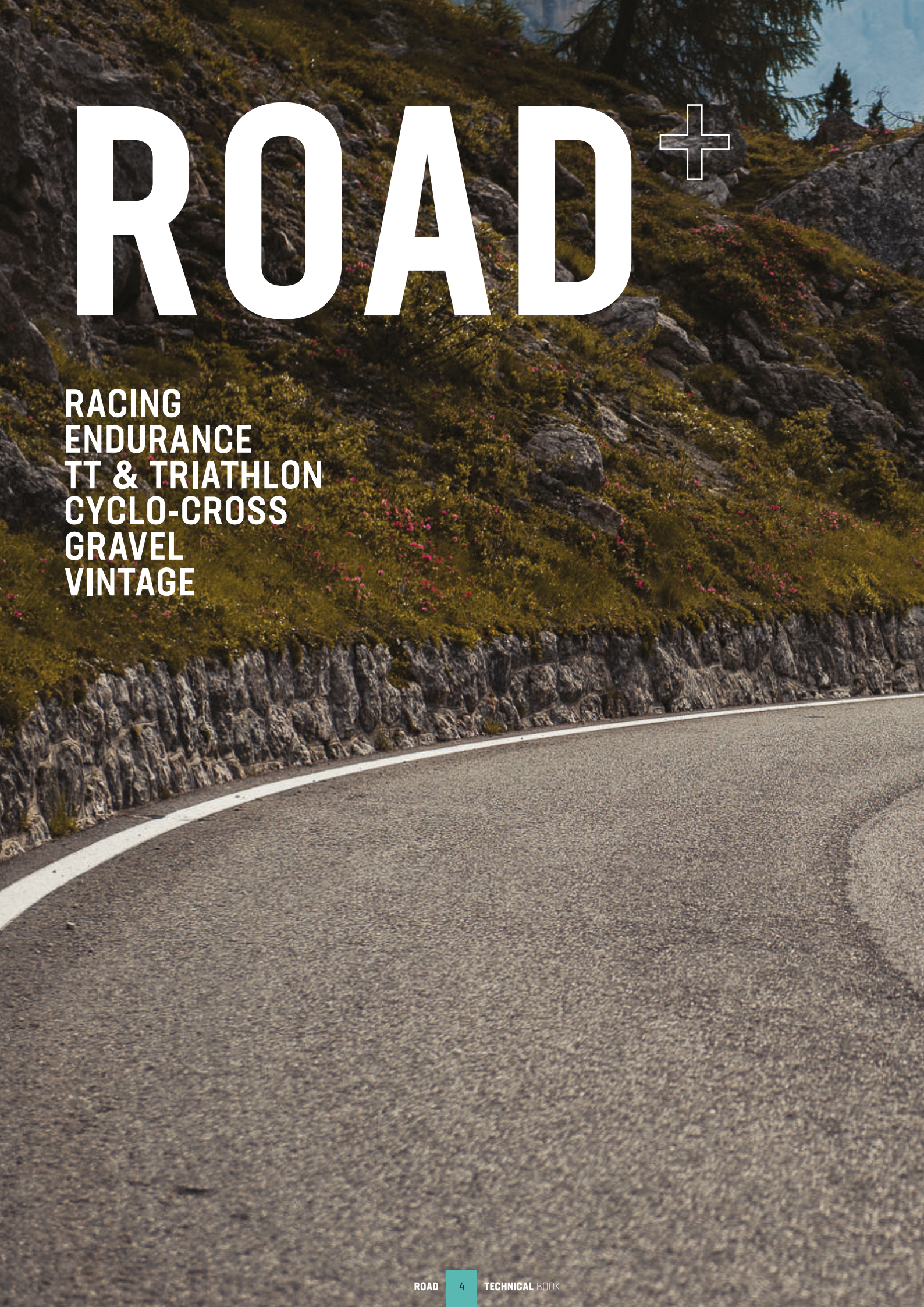

ROAD +

RACING
ENDURANCE
TT & TRIATHLON
CYCLO-CROSS
GRAVEL
VINTAGE

ROAD RANGE OVERVIEW

	PROFESSIONAL	PERFORMANCE	SPORT
RACING	Specialissima Oltre XR4	Oltre XR3 Aria Sprint	
ENDURANCE	Infinito CV	Infinito XE	Via Nirone 7
TT & TRIATHLON	Aquila CV		
CICLO-CROSS	Zolder Pro		
GRAVEL		Impulso All Road Via Nirone 7 All Road	
VINTAGE			L'Eroica

BIKE FIT **CHART**

HANDLEBAR / STEM / CRANKSET

RACING																		ENDURANCE			DAMA BIANCA						
Specialissima			OltreXR4			OltreXR3			Aria			Sprint			Infinito CV Infinito XE Via Nirone 7			Via Nirone 7			Road Crankset		Road Lady Crankset	
Frame Size	Stem Size	Handle-bar Size (c-c)	Frame Size	Stem Size	Handle-bar Size (c-c)	Frame Size	Stem Size	Handle-bar Size (c-c)	Frame Size	Stem Size	Handle-bar Size (c-c)	Frame Size	Stem Size	Handle-bar Size (c-c)	Frame Size	Stem Size	Handle-bar Size (c-c)	Frame Size	Stem Size	Handle-bar Size (c-c)	Frame Size	Lenght	Frame Size	Lenght
			44	70/100	40				44	70	40	44	70	40				44	70	38	44	165	44	165
															46	70	40	46	70	38	46	170	46	165
47	80	40	47	70/100	40	47	90	40	47	90	40	47	90	40	47	70	40				47	170		
50	90	40	50	90/100	40	50	90	40	50	90	40	50	90	40	50	90	40	50	90	40	50	170	50	170
53	100	42	53	100/110	42	53	100	40	53	100	40	53	100	40	53	90/100	40/42	53	90	40	53	170	53	170
55	110	42	55	110	42	55	110	42	55	110	42	55	110	42	55	100/110	42	55	90	40	55	172,5	55	170
57	120	42	57	120	42	57	110	42	57	110	42	57	110	42	57	110/120	42				57	172,5		
59	120	44	59	120	42/44	59	120	42	59	120	42	59	120	42	59	110/120	42/44				59	172,5		
61	130	44	61	130	44	61	130	44	61	130	44	61	130	44	61	120/130	44				61	175		

RACING

OLTRE XR4
OLTRE XR3
SPECIALISSIMA
ARIA
SPRINT

OLTRE XR4 DISC

POSITIONING
Bianchi's leading aero design meets upgraded disc braking performance to deliver superior road experience.

COURSE/TERRAIN
Road, flat and downhill segments, hilly and fast courses.

END USE DESTINATION
Made for everyone who love the thrill of the speed. Ideal for all-round pro riders and for those who're always on the attack and want to keep the best aero position for longer time while achieving maximum braking efficiency.

KEY FEATURES
- CFD designed aero disc full carbon HM monocoque frame and fork
- Countervail technology to reduce muscle fatigue and support the best aero position
- Vision Metron 5D ACR handlebar and dedicated headset
- Full internal disc brake cable housing
- Tavolozza on-line color configurator

LIGHTWEIGHT ●●●●●●●●○○
DESIGN ●●●●●●●●●●
COMFORT ●●●●●●●○○○
PERFORMANCE ●●●●●●●●●●

GEOMETRY - RACING

MIS-SLP													
A1	A	B1	C	D	E	F	G	G1	H	I	X	Y	WB
470	420	513	410	58	105	579	74.5°	70.5°	43	368	377	490	982
500	450	523	410	58	110	581	74.5°	71.5°	43	368	385	498	983
530	480	535	410	68	125	582	74°	72°	43	368	385	524	984
550	501	550	410	68	140	588	73.5°	72.5°	43	368	390	545	988
570	520	560	412	68	155	593	73.5°	73°	43	368	395	556	995
590	540	575	412	68	175	603	73°	73°	43	368	398	575	1005
610	560	585	414	68	195	607	72.5°	73°	43	368	398	594	1011

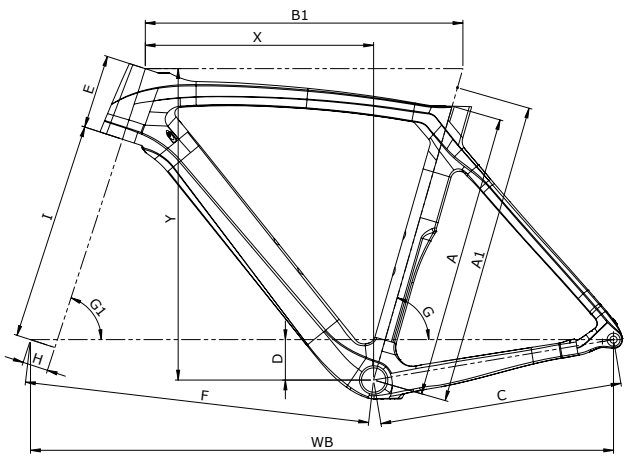

PRECISION AND POWER CONTROL

Disc brakes allow to maintain a clean aero form, while achieving maximum braking efficiency. The key benefit is the modulation of braking power with precision and complete control, in any condition.

ALL WEATHER CONDITIONS

Oltre XR4 hydraulic disc brakes are impervious to adverse weather conditions. By developing the new disc brake equipped Oltre XR4, Bianchi allows you to ride perfect lines at the optimum speed – for every single corner, rain or shine.

AERO HANDLEBAR

Aero efficiency is key to the Oltre XR4 Disc, and this extends to the new Metron 5D ACR aero handlebar featuring fully-enclosed cable routing through the handlebar itself and stem - for the hydraulic brake hoses and the gear cables. The Metron 5D ACR bar and stem gives the Oltre XR4 the cleaner, more aero front end for added speed and efficiency.

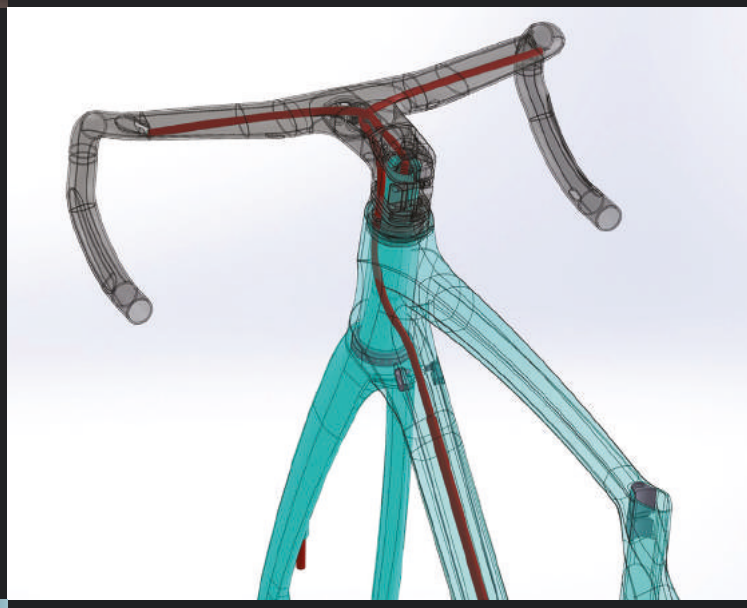

CLEARANCE

Oltre XR4 Disc frame and fork are designed to accommodate wider tires. The extra clearance enhances comfort and grip.

OLTRE XR4 DISC - SUPER RECORD EPS 12SP 52/36

CODE	YPB01
COLOR	5K-CK16/Black Full Glossy, 2R-Black/Graphite Full Glossy, Tavolozza
FRAME	Oltre XR4 Disc carbon w/Countervail, mechanical/ electronic shifting compatible, headset 1.5", PressFit BB 86,5x41mm, Disc brake internal cable routing, flat mount, thru axle 12x142mm, sizes 47-50-53-55-57-59-61cm
BOLTS / HARDWARE	AL7075-T6 large button head bolts, Torx M5*14mm x 4pcs, celeste color with Bianchi logo
SEATPOST CLAMP	included in the frame
HEADSET	Fsa Orbit w/UD carbon custom Metron 5D ACR compatible top cap, 45°- 45° ACB bearings lower 1.5"- top 1 .5"
FORK	Bianchi Full Carbon w/Countervail, Disc, thru axle 12x100mm
SHIFTER	Campagnolo Super Record EPS 2x12sp
REAR DERAILLEUR	Campagnolo Super Record EPS 12sp
FRONT DERAILLEUR	Campagnolo Super Record EPS 12sp braze-on w/FD stiffness increaser
ELECTRIC CABLE	Campagnolo EPS V4 Internal interface-handlebar mount 12sp
BATTERY / MOUNT	Campagnolo EPS V4 12sp Power Unit
CHARGER / PWR CABLE	Campagnolo EPS battery charger kit for EPS V3/V4 12sp Power Unit. EEC, AUS, UK, USA compatible
CRANKSET	Campagnolo Super Record 52/36T Ultra-Torque CT TI Carbon 12sp, crank length: 170mm-47/53cm, 172.5mm-55759cm, 175mm-61cm
BOTTOM BRACKET	Campagnolo Ultra Torque OS-Fit integrated cups 86,5x41mm

CHAIN	Campagnolo Super Record 12sp
CASSETTE / FREEWHEEL	Campagnolo Super Record 12sp, 11-29T
BRAKE	Campagnolo Hydraulic Disc Brakes, Flat Mount calipers
BRAKE LEVER	included w/shifters
DISC ROTOR	Campagnolo 03 AFS, diam. 160mm
RIM/WHEELSET	Fulcrum Wind 550 DB, 2WayFit C19 full carbon rims, 700X19c, profile 55mm, clincher and tubeless system, thru axle front 12x100mm, rear 12x142mm
TIRE	Vittoria Corsa G2.0 graphene 700x25, 320TPI, Folding, black
STEM	Included with handlebar
HANDLEBAR	Vision Metron 5D Integrated Aero bar, Bar/stem Integrated, material UD Weave Carbon, drop 125mm, reach 80mm, Di2 compatible, Ext: 100x400mm-47/50cm, 110x420mm-53/55cm, 120x420mm-57/59cm, 130x440mm-61cm
GRIP / TAPE	Black soft Microfiber tapes w/shockproof Eva-139
SEATPOST	Oltre Full Carbon Aero; clamp with alloy head adjustable and reversible +/- 35mm, length: 250mm-47cm, 300mm-50/53cm, 350mm-55/59cm, 380mm-61cm, Setback: 25mm/-10mm
SADDLE	Fi'zi:k Arione R1, thermowelded MicroTex cover, Composite carbon co-injected Nylon shell w/WingFlex , carbon braided 7x9 rails, Integrated Clip System
BOTTLE CAGE	Reparto Corse Carbon fiber, UD matt finish
WATER BOTTLE	Bianchi Loli 600ml

OLTRE XR4 DISC - SUPER RECORD 12SP 52/36

CODE	YPB03
COLOR	5K-CK16/Black Full Glossy, 2R-Black/Graphite Full Glossy, Tavolozza
FRAME	Oltre XR4 Disc carbon w/Countervail, mechanical/ electronic shifting compatible, headset 1.5", PressFit BB 86,5x41mm, Disc brake internal cable routing, flat mount, thru axle 12x142mm, sizes 47-50-53-55-57-59-61cm
BOLTS / HARDWARE	AL7075-T6 large button head bolts, Torx M5*14mm x 4pcs, celeste color with Bianchi logo
SEATPOST CLAMP	included in the frame
HEADSET	Fsa Orbit w/UD carbon custom Metron 5D ACR compatible top cap, 45°- 45° ACB bearings lower 1.5"- top 1 .5"
FORK	Bianchi Full Carbon w/Countervail, Disc, thru axle 12x100mm
SHIFTER	Campagnolo Super Record 2x12sp
REAR DERAILLEUR	Campagnolo Super Record 12sp, RD for standard hanger
FRONT DERAILLEUR	Campagnolo Super Record 12sp braze-on FD w/CSD chain guard System
CRANKSET	Campagnolo Super Record 52x36T Ultra-Torque CT TI Carbon 12sp, Crank Length: 170mm-47/53cm, 172.5mm-55/59cm, 175mm-61cm
BOTTOM BRACKET	Campagnolo Ultra Torque OS-Fit integrated cups 86,5x41mm
CHAIN	Campagnolo Super Record 12sp
CASSETTE / FREEWHEEL	Campagnolo Super Record 12sp, 11-29T
BRAKE	Campagnolo Hydraulic Disc brakes, flat mount calipers
BRAKE LEVER	included w/shifters

DISC ROTOR	Campagnolo 03 AFS, diam. 160mm
RIM/WHEELSET	Fulcrum Wind 550 DB, 2WayFit C19 full carbon rims, 700x19c, profile 55mm, clincher and tubeless system, thru axle front 12x100mm, rear 12x142mm
TIRE	Vittoria Corsa G2.0 graphene, 700x25, 320TPI, Folding, black
STEM	Included with handlebar
HANDLEBAR	Vision Metron 5D ACR Disc Integrated Aero bar, Bar/ stem Integrated, material UD Weave Carbon, drop 125mm, reach 80mm, Di2 compatible, Ext: 100x400mm-47/50cm, 110x420mm-53/55cm, 120x420mm-57/59cm, 130x440mm-61cm
GRIP / TAPE	Black soft Microfiber tapes w/shockproof Eva-139
SEATPOST	Oltre Full Carbon Aero; clamp with alloy head adjustable and reversible +/- 35mm, length: 250mm-47cm, 300mm-50/53cm, 350mm-55/59cm, 380mm-61cm, Setback: 25mm/-10mm
SADDLE	Fi'zi:k Arione R1, thermowelded MicroTex cover, Composite carbon co-injected Nylon shell w/WingFlex , carbon braided 7x9 rails, Integrated Clip System
BOTTLE CAGE	Reparto Corse Carbon fiber, UD matt finish
WATER BOTTLE	Bianchi Loli 600ml

OLTRE XR4 DISC - DURA ACE DI2 11SP 52/36

CODE	YPB15
COLOR	5K-CK16/Black Full Glossy, 2R-Black/Graphite Full Glossy, Tavolozza
FRAME	Oltre XR4 Disc carbon w/Countervail, mechanical/ electronic shifting compatible, headset 1.5", PressFit BB 86,5x41mm, Disc brake internal cable routing, flat mount, thru axle 12x142mm, sizes 47-50-53-55-57-59-61cm
BOLTS / HARDWARE	AL7075-T6 large button head bolts, Torx M5*14mm x 4pcs, celeste color with Bianchi logo
SEATPOST CLAMP	included in the frame
HEADSET	Fsa Orbit w/UD carbon custom Metron 5D ACR compatible top cap, 45°- 45° ACB bearings lower 1.5"- top 1 .5"
FORK	Bianchi Full Carbon w/Countervail, Disc, thru axle 12x100mm
SHIFTER	Shimano Dura Ace Di2 ST-R9170 2x11sp
REAR DERAILLEUR	Shimano Dura Ace Di2 RD-R9150 SS 11sp, shadow design, direct attachment, Max 30T
FRONT DERAILLEUR	Shimano Dura Ace Di2 FD-R9150-F, braze-on type
ELECTRIC CABLE	Shimano Junction A EW-RS910, handlebar built-in type, e-tube port X2, charging port X1
BATTERY / MOUNT	Shimano Battery BT-DN110-1
CHARGER / PWR CABLE	Shimano Battery charger SM-BCR2, including charging cord for usb
CRANKSET	Shimano Dura Ace FC-R9100, Hollowtech II, 52x36T, Crank Length: 165mm-44cm, 170mm-47/53cm, 172.5mm-55/59cm, 175mm-61cm
BOTTOM BRACKET	Shimano SM-BB92-41B, PressFit
CHAIN	Shimano Dura Ace CN-HG901-11
CASSETTE / FREEWHEEL	Shimano Dura Ace CS-R9100, 11-12-13-14-15-17-19-21-23-25-28T

BRAKE	Shimano BR-R9170 Hydraulic disc brake, flat mount caliper
BRAKE LEVER	included w/shifters
DISC ROTOR	Shimano SM-RT900, diam. 160mm, Center Lock
RIM/WHEELSET	Vision Metron 55 SC, full carbon disc brake rims, 700X19c, clincher and TLR system, thru axle front 12x100mm, rear 12x142mm
TIRE	Vittoria Corsa G2.0 graphene, 700x25, 320TPI, Folding, black
STEM	Included with handlebar
HANDLEBAR	Vision Metron 5D ACR Disc Integrated Aero bar, Bar/stem Integrated, material UD Weave Carbon, drop 125mm, reach 80mm, Di2 compatible, Ext: 100x400mm-47/50cm, 110x420mm-53/55cm, 120x420mm-57/59cm, 130x440mm-61cm
GRIP / TAPE	Black soft Microfiber tapes w/shockproof Eva-139
SEATPOST	Oltre Full Carbon Aero; clamp with alloy head adjustable and reversible +/- 35mm, length: 250mm-47cm, 300mm-50/53cm, 350mm-55/59cm, 380mm-61cm, Setback: 25mm/-10mm
SADDLE	Fi'zi:k Arione R1, thermowelded MicroTex cover, Composite carbon co-injected Nylon shell w/WingFlex , carbon braided 7x9 rails, Integrated Clip System
BOTTLE CAGE	Reparto Corse Carbon fiber, UD matt finish
WATER BOTTLE	Bianchi Loli 600ml

OLTRE XR4 DISC - DURA ACE 11SP 52/36

THE IMAGE SHOWN IS INDICATIVE ONLY. Components and graphic details may differ from the actual model.

CODE	YPB16
COLOR	5K-CK16/Black Full Glossy, 2R-Black/Graphite Full Glossy, Tavolozza
FRAME	Oltre XR4 Disc carbon w/Countervail, mechanical/ electronic shifting compatible, headset 1.5", PressFit BB 86,5x41mm, Disc brake internal cable routing, flat mount, thru axle 12x142mm, sizes 47-50-53-55-57-59-61cm
BOLTS / HARDWARE	AL7075-T6 large button head bolts, Torx M5*14mm x 4pcs, celeste color with Bianchi logo
SEATPOST CLAMP	included in the frame
HEADSET	Fsa Orbit w/UD carbon custom Metron 5D ACR compatible top cap, 45°- 45° ACB bearings lower 1.5"- top 1 .5"
FORK	Bianchi Full Carbon w/Countervail, Disc, thru axle 12x100mm
SHIFTER	Shimano Dura Ace ST-R9100 2x11sp
REAR DERAILLEUR	Shimano Dura Ace RD-R9100 SS 11sp, shadow design, direct attachment
FRONT DERAILLEUR	Shimano Dura Ace FD-R9100 11sp, brazed-on type
CRANKSET	Shimano Dura Ace FC-R9100, Hollowtech II, 52x36T, Crank Length: 165mm-44cm, 170mm-47/53cm, 172.5mm-55/59cm, 175mm-61cm
BOTTOM BRACKET	Shimano SM-BB92-41B, PressFit Road
CHAIN	Shimano Dura Ace CN-HG901-11
CASSETTE / FREEWHEEL	Shimano Dura Ace CS-R9100, 11-12-13-14-15-17-19-21-23-25-28T
BRAKE	Shimano BR-R9170 Hydraulic disc brake, flat mount caliper
BRAKE LEVER	included w/shifters

DISC ROTOR	Shimano SM-RT900, diam. 160mm, Center Lock
RIM/WHEELSET	Vision Metron 55 SC, full carbon disc brake rims 700x19, clincher and TLR system, thru axle front 12x100mm, rear 12x142mm
TIRE	Vittoria Corsa G2.0 graphene, 700x25, 320TPI, Folding, black
STEM	Included with handlebar
HANDLEBAR	Vision Metron 5D ACR Disc Integrated Aero bar, Bar/ stem Integrated, material UD Weave Carbon, drop 125mm, reach 80mm, Di2 compatible, Ext: 100x400mm-47/50cm, 110x420mm-53/55cm, 120x420mm-57/59cm, 130x440mm-61cm
GRIP / TAPE	Black soft Microfiber tapes w/shockproof Eva-139
SEATPOST	Oltre Full Carbon Aero; clamp with alloy head adjustable and reversible +/- 35mm, length: 250mm-47cm, 300mm-50/53cm, 350mm-55/59cm, 380mm-61cm, Setback: 25mm/-10mm
SADDLE	Fi'zi:k Arione R1, thermowelded MicroTex cover, Composite carbon co-injected Nylon shell w/WingFlex , carbon braided 7x9 rails, Integrated Clip System
BOTTLE CAGE	Reparto Corse Carbon fiber, UD matt finish
WATER BOTTLE	Bianchi Loli 600ml

OLTRE XR4 DISC - ULTEGRA DI2 11SP 52/36

CODE	YPB17
COLOR	5K-CK16/Black Full Glossy, 2R-Black/Graphite Full Glossy, Tavolozza
FRAME	Oltre XR4 Disc carbon w/Countervail, mechanical/ electronic shifting compatible, headset 1.5", PressFit BB 86,5x41mm, Disc brake internal cable routing, flat mount, thru axle 12x142mm, sizes 47-50-53-55-57-59-61cm
BOLTS / HARDWARE	AL7075-T6 large button head bolts, Torx M5*14mm x 4pcs, celeste color with Bianchi logo
SEATPOST CLAMP	included in the frame
HEADSET	Fsa Orbit w/UD carbon custom Metron 5D ACR compatible top cap, 45°- 45° ACB bearings lower 1.5"- top 1 .5"
FORK	Bianchi Full Carbon w/Countervail, Disc, thru axle 12x100mm
SHIFTER	Shimano Ultegra Di2 ST-R8070 2x11sp
REAR DERAILLEUR	Shimano Ultegra Di2 RD-R8050 SS 11sp, top normal shadow design, direct attachment, Max 30T
FRONT DERAILLEUR	Shimano Ultegra Di2 FD-R8050, brazed-on type
ELECTRIC CABLE	Shimano Junction A EW-RS910, handlebar built-in type, e-tube port X2, charging port X1
BATTERY / MOUNT	Shimano Battery BT-DN110-1
CHARGER / PWR CABLE	Shimano Battery charger SM-BCR2, including charging cord for usb
CRANKSET	Shimano Ultegra FC-R8000 52x36T, Hollowtech II, Crank Length: 170mm-47/53cm, 172.5mm-55/59cm, 175mm-61cm
BOTTOM BRACKET	Shimano SM-BB72-41B, PressFit
CHAIN	Shimano Ultegra CN-HG701-11, 11sp
CASSETTE / FREEWHEEL	Shimano Ultegra CS-R8000, 11-12-13-14-15-17-19-21-23-25-28T
BRAKE	Shimano BR-R8070 Hydraulic disc brake, flat mount calipers

BRAKE LEVER	included w/shifters
DISC ROTOR	Shimano SM-RT800 Center Lock, diam. 160mm
RIM/WHEELSET	Fulcrum Racing 418 disc brake, R400 aluminium asymetric rims 622x17c, tubeless ready, profile 34mm, thru axle front 12x100mm, rear 12x142mm
TIRE	Vittoria Rubino Pro G2.0 graphene, 700x25, 150TPI, Folding, black
STEM	Included with handlebar
HANDLEBAR	Vision Metron 5D ACR Disc Integrated Aero bar, Bar/stem Integrated, material UD Weave Carbon, drop 125mm, reach 80mm, Di2 compatible, Ext: 100x400mm-47/50cm, 110x420mm-53/55cm, 120x420mm-57/59cm, 130x440mm-61cm
GRIP / TAPE	Black soft Microfiber tapes w/shockproof Eva-139
SEATPOST	Oltre Full Carbon Aero; clamp with alloy head adjustable and reversible +/- 35mm, length: 250mm-47cm, 300mm-50/53cm, 350mm-55/59cm, 380mm-61cm, Setback: 25mm/-10mm
SADDLE	Fi'zi:k Arione R3 k:ium; MicroTex Gummy cover, Fiberglass Thermoplastic shell w/Wing Flex, k:ium rails, Integrated Clip System
BOTTLE CAGE	Reparto Corse Carbon fiber, UD matt finish
WATER BOTTLE	Bianchi Loli 600ml

OLTRE XR4 DISC - RED ETAP AXS 12SP

CODE	YPB09
COLOR	5K-CK16/Black Full Glossy, 2R-Black/Graphite Full Glossy, Tavolozza
FRAME	Oltre XR4 Disc carbon w/Countervail, mechanical/ electronic shifting compatible, headset 1.5", PressFit BB 86,5x41mm, Disc brake internal cable routing, flat mount, thru axle 12x142mm, sizes 47-50-53-55-57-59-61cm
BOLTS / HARDWARE	AL7075-T6 large button head bolts, Torx M5*14mm x 4pcs, celeste color with Bianchi logo
SEATPOST CLAMP	included in the frame
HEADSET	Fsa Orbit w/UD carbon custom Metron 5D ACR compatible top cap, 45°- 45° ACB bearings lower 1.5"- top 1 .5"
FORK	Bianchi Full Carbon w/Countervail, Disc, thru axle 12x100mm
SHIFTER	Sram Red eTap AXS D1 2x12sp
REAR DERAILLEUR	Sram Red eTap AXS D1 12sp
FRONT DERAILLEUR	Sram Red eTap AXS D1, brazed on FD
BATTERY / MOUNT	Sram eTap EP Powerpack, 2 batteries
CHARGER / PWR CABLE	Sram Red eTap battery charger
CRANKSET	Sram Red D1 48/35T 12sp, Crank Length: 170mm-47/53cm, 172.5mm-55/59cm, 175mm-61cm
BOTTOM BRACKET	Sram PressFit Road 86,5x41mm
CHAIN	Sram Red D1 12sp
CASSETTE / FREEWHEEL	Sram Red XG-1290 D1 12sp, 10-11-12-13-14-15-16-17-19-21-24-28T
BRAKE	Sram Red eTap AXS HRD HydroC

DISC ROTOR	Sram Centerline XR Road, diam. 160mm
RIM/WHEELSET	Vision Metron 55 SC, full carbon disc brake rims, 700X19c, clincher and TLR system, thru axle front 12x100mm, rear 12x142mm, XDR body
TIRE	Vittoria Corsa G2.0 graphene, 700x25, 320TPI, Folding, black
STEM	Included with handlebar
HANDLEBAR	Vision Metron 5D ACR Disc Integrated Aero bar, Bar/ stem Integrated, material UD Weave Carbon, drop 125mm, reach 80mm, Di2 compatible, Ext: 100x400mm-47/50cm, 110x420mm-53/55cm, 120x420mm-57/59cm, 130x440mm-61cm
GRIP / TAPE	Black soft Microfiber tapes w/shockproof Eva-139
SEATPOST	Oltre Full Carbon Aero; clamp with alloy head adjustable and reversible +/- 35mm, length: 250mm-47cm, 300mm-50/53cm, 350mm-55/59cm, 380mm-61cm, Setback: 25mm/-10mm
SADDLE	Fi'zi:k Arione R1, MicroTex cover, Composite carbon co-injected Nylon shell w/WingFlex, carbon braided 7x9 rail, Integrated Clip System
BOTTLE CAGE	Elite Cannibal Carbon matt
WATER BOTTLE	Bianchi Loli 600ml

OLTRE XR4 DISC - FRAME KIT

CODE	XPB02I
COLOR	5K-CK16/Black Full Glossy, 2R-Black/Graphite Full Glossy, Tavolozza
FRAME	Oltre XR4 carbon w/Countervail, mechanical/electronic shifting compatible, headset 1.5", PressFit BB 86,5x41mm, disc brake internal cable routing, Flat Mount calipers, thru axle 12x142mm, sizes 47-50-53-55-57-59-61cm
BOLTS / HARDWARE	AL7075-T6 large button head bolts, Torx M5*14mm x 4pcs, celeste color with Bianchi logo
SEATPOST CLAMP	included in the frame
HEADSET	Fsa Orbit w/UD carbon custom Metron 5D ACR compatible top cap, 45°- 45° ACB bearings lower 1.5"- top 1 .5"
FORK	Bianchi Full Carbon w/Countervail, Disc, thru axle 12x100mm
STEM	Included with handlebar OPTION STEM: FSA NS ACR, 3D Forged/CNC AL6061, -6°, Di2 compatible, Ext: 90mm-47/50cm, 100mm-53cm, 110mm-55/57cm, 120mm-59cm, 130mm-61cm

HANDLEBAR	Vision Metron 5D Integrated Aero bar, Bar/stem Integrated, material UD Weave Carbon, drop 125mm, reach 80mm, Di2 compatible, Ext: 100x400mm-47/50cm, 110x420mm-53/55cm, 120x420mm-57/59cm, 130x440mm-61cm **OPTION HANDLEBAR:** FSA Energy SCR Compact, AL7050DB, diam. 31.8mm, drop 125mm, reach 80mm, 4∫ Outward Bend, Size:400mm-47/50cm, 420mm-53/57cm, 440mm-59/61cm
SEATPOST	Oltre Full Carbon Aero; clamp with alloy head adjustable and reversible +/- 35mm, length: 250mm-44/47cm, 300mm-50/53cm, 350mm-55/59cm, 380mm-61cm, Setback: 25mm/-10mm

OLTRE XR4

POSITIONING
Super aerodynamic bike, with rigid frame engineered with Bianchi CV system to maximize your aero advantage. The most complete extreme racing bike ever created.

COURSE/TERRAIN
Road, flat and downhill segments, hilly and fast courses.

END USE DESTINATION
Made for everyone who love the thrill of the speed. Ideal for all-round pro riders and for those who're always on the attack and want to keep the best aero position for longer time.

KEY FEATURES
- Monocoque carbon hi-modulus frame with Countervail® material
- Aero shape designed with CFD software to reduce the drag
- Aero handlebar and dedicated headset
- EPS mandrel to control the dimension of pre- shape with smooth internal surface for higher strength after molding process
- Tapered headtube 1.1/8" to 1.4"
- BBset Press fit 86.5 x 41
- Double compatibility mechanic and electronic groupset
- Dedicated seatpost system with integrated look and adjustable offset 25mm or -10mm
- Fully internal cable routing
- 7 sizes: 47, 50, 53, 55, 57, 59 and 61cm
- Weight in 55 size: 980g (+/- 5%) color BZ black
- Tavolozza on-line color configurator

LIGHTWEIGHT ●●●●●●●●●○
DESIGN ●●●●●●●●●●
COMFORT ●●●●●●●○○○
PERFORMANCE ●●●●●●●●●●

GEOMETRY - RACING

MIS-SLP												
A1	AS	B1	BS	C	D	E	F	G	G1	Y	X	WB
440	400	505	480	400	58	95	575	74.5°	70°	479	372	968
470	420	515	500	400	58	105	579	74.5°	70.5°	490	377	972
500	450	525	515	406	58	110	581	74.5°	71.5°	499	384	973.5
530	480	535	525	406	68	125	582	74°	72°	525	385	978.5
550	500	550	540	407	68	140	588	73.5°	72.5°	541	390	985.5
570	520	560	550	407	68	155	593	73.5°	73°	557	395	991
590	540	575	565	409	68	175	603	73°	73°	576	398	1002.5
610	560	585	575	411	68	195	607	72.5°	73°	495	399	1009

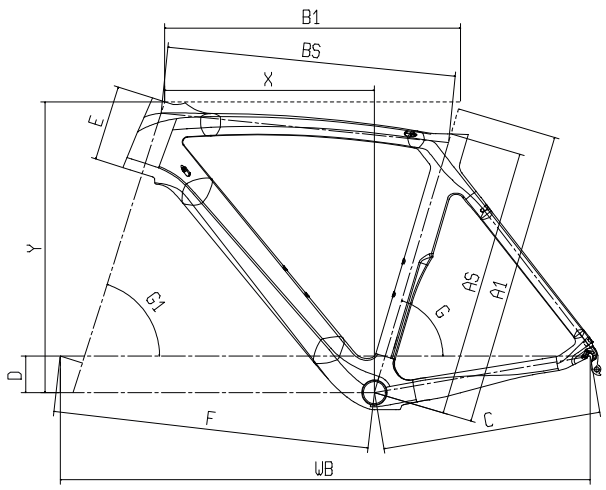

OLTRE XR4 - SUPER RECORD EPS 12SP 52/36

THE IMAGE SHOWN IS INDICATIVE ONLY. Components and graphic details may differ from the actual model.

CODE	YPBL8
COLOR	5K-CK16/Black Full Glossy, 2R-Black/Graphite Full Glossy, Tavolozza
FRAME	Oltre XR4 carbon w/Countervail, mechanical/electronic shifting compatible, head tube 1.4" - 1.1/8", direct mount brakes, PressFit 86,5x41mm BB,sizes 44-47-50-53-55-57-59-61cm
BOLTS / HARDWARE	AL7075-T6 large button head bolts, Torx M5*14mm x 4pcs, celeste color with Bianchi logo
SEATPOST CLAMP	included in the frame
HEADSET	Fsa Orbit C-33 Matt UD Carbon 1.1/8"›1.1/4", 45°- 45° ACB bearings, w/Carbon custom cap specific for Metron 5D integrated handlebar, for 47mm/52mm OD head tube, NO.44/CF-R/5D
FORK	Bianchi Full Carbon Aero w/Countervail, 1.1/8›1.4" integrated head
SHIFTER	Campagnolo Super Record EPS 2x12sp Ergopower shifiting levers
REAR DERAILLEUR	Campagnolo Super Record EPS 12sp
FRONT DERAILLEUR	Campagnolo Super Record EPS 12sp, brazed-on type w/FD stiffness increaser
ELECTRIC CABLE	Campagnolo EPS V4 Interface
BATTERY / MOUNT	Campagnolo EPS V4 12sp Power Unit
CHARGER / PWR CABLE	Campagnolo EPS battery charger kit for EPS V3/V4 12sp Power Unit. EEC, AUS, UK, USA compatible
CRANKSET	Campagnolo Super Record 52x36T Ultra-Torque CT TI Carbon, Crank Length: 165mm-44cm, 170mm-47/54cm, 172.5mm-55/59cm, 175mm-61cm
BOTTOM BRACKET	Campagnolo Ultra Torque OS-Fit integrated cups 86,5x41mm

CHAIN	Campagnolo Super Record 12sp
CASSETTE / FREEWHEEL	Campagnolo Super Record 12sp, 11-29T
BRAKE	Campagnolo Record Skeleton, direct mount
BRAKE LEVER	included w/shifters
RIM/WHEELSET	Fulcrum Racing Zero C17, black/dark
TIRE	Vittoria Corsa G2.0 graphene 700x25, 320TPI, Folding, black
STEM	Included w/handlebar
HANDLEBAR	Vision Metron 5D Integrated Aero bar, Bar/stem Integrated, material UD Weave Carbon, drop 125mm, reach 80mm, Di2 compatible, Ext: 100x400mm-44/50cm, 110x420mm-53/55cm, 120x420mm-57/59cm, 130x440mm-61cm
GRIP / TAPE	Black soft Microfiber tapes w/shockproof Eva-139
SEATPOST	Oltre Full Carbon Aero; clamp with alloy head adjustable and reversible +/- 35mm, length: 250mm-44/47cm, 300mm-50/53cm, 350mm-55/59cm, 380mm-61cm, Setback: 25mm/-10mm
SADDLE	Fi'zi:k Arione R1, thermowelded MicroTex cover, Composite carbon co-injected Nylon shell w/WingFlex , carbon braided 7x9 rails, Integrated Clip System
BOTTLE CAGE	Reparto Corse Carbon fiber, UD matt finish
WATER BOTTLE	Bianchi Loli 600ml

OLTRE XR4 - SUPER RECORD 12SP COMPACT

THE IMAGE SHOWN IS INDICATIVE ONLY. Components and graphic details may differ from the actual model.

CODE	YPB02
COLOR	5K-CK16/Black Full Glossy, 2R-Black/Graphite Full Glossy, Tavolozza
FRAME	Oltre XR4 carbon w/Countervail, mechanical/electronic shifting compatible, head tube 1.4" - 1.1/8", direct mount brakes, PressFit 86,5x41mm BB,sizes 44-47-50-53-55-57-59-61cm
BOLTS / HARDWARE	AL7075-T6 large button head bolts, Torx M5*14mm x 4pcs, celeste color with Bianchi logo
SEATPOST CLAMP	included in the frame
HEADSET	Fsa Orbit C-33 Matt UD Carbon 1.1/8"›1.1/4", 45°- 45° ACB bearings, w/Carbon custom cap specific for Metron 5D integrated handlebar, for 47mm/52mm OD head tube, NO.44/CF-R/5D
FORK	Bianchi Full Carbon Aero w/Countervail, 1.1/8›1.4" integrated head
SHIFTER	Campagnolo Super Record Ultra Shift 2x12sp Ergopower
REAR DERAILLEUR	Campagnolo Super Record 12sp, RD for standard hanger
FRONT DERAILLEUR	Campagnolo Super Record 12sp braze-on FD w/CSD chain guard System
CRANKSET	Campagnolo Super Record 50x34T, Ultra-Torque CT TI Carbon, Crank Length: 165mm-44cm, 170mm-47/53cm, 172.5mm-55/59cm, 175mm-61cm
BOTTOM BRACKET	Campagnolo Ultra Torque OS-Fit integrated cups 86,5x41mm
CHAIN	Campagnolo Super Record 12sp
CASSETTE / FREEWHEEL	Campagnolo Super Record 12sp, 11-29T
BRAKE	Campagnolo Record Skeleton, direct mount

BRAKE LEVER	included w/shifters
RIM/WHEELSET	Fulcrum Racing Zero C17, black/dark
TIRE	Vittoria Corsa G2.0 graphene, 700x25, 320TPI, Folding, black
STEM	Integrated w/handlebar
HANDLEBAR	Vision Metron 5D Integrated Aero bar, Bar/stem Integrated, material UD Weave Carbon, drop 125mm, reach 80mm, Di2 compatible, Ext: 100x400mm-44/50cm, 110x420mm-53/55cm, 120x420mm-57/59cm, 130x440mm-61cm
GRIP / TAPE	Black soft Microfiber tapes w/shockproof Eva-139
SEATPOST	Oltre Full Carbon Aero; clamp with alloy head adjustable and reversible +/- 35mm, length: 250mm-44/47cm, 300mm-50/53cm, 350mm-55/59cm, 380mm-61cm, Setback: 25mm/-10mm
SADDLE	Fi'zi:k Arione R1, thermowelded MicroTex cover, Composite carbon co-injected Nylon shell w/WingFlex , carbon braided 7x9 rails, Integrated Clip System
BOTTLE CAGE	Reparto Corse Carbon fiber, UD matt finish
WATER BOTTLE	Bianchi Loli 600ml

OLTRE XR4 - DURA ACE DI2 11SP 52/36

THE IMAGE SHOWN IS INDICATIVE ONLY. Components and graphic details may differ from the actual model.

CODE	YPBL1
COLOR	5K-CK16/Black Full Glossy, 2R-Black/Graphite Full Glossy, Tavolozza
FRAME	Oltre XR4 carbon w/Countervail, mechanical/electronic shifting compatible, head tube 1.4" - 1.1/8", direct mount brakes, PressFit 86,5x41mm BB,sizes 44-47-50-53-55-57-59-61cm
BOLTS / HARDWARE	AL7075-T6 large button head bolts, Torx M5*14mm x 4pcs, celeste color with Bianchi logo
SEATPOST CLAMP	included in the frame
HEADSET	Fsa Orbit C-33 Matt UD Carbon 1.1/8">1.1/4", 45°- 45° ACB bearings, w/Carbon custom cap specific for Metron 5D integrated handlebar, for 47mm/52mm OD head tube, NO.44/CF-R/5D
FORK	Bianchi Full Carbon Aero w/Countervail, 1.1/8>1.4" integrated head
SHIFTER	Shimano Dura Ace Di2 ST-R9150 2x11sp
REAR DERAILLEUR	Shimano Dura Ace Di2 RD-R9150 SS 11sp, shadow design, direct attachment, Max 30T
FRONT DERAILLEUR	Shimano Dura Ace Di2 FD-R9150-F, braze-on type
ELECTRIC CABLE	Shimano Junction A EW-RS910, handlebar built-in type, e-tube port X2, charging port X1
BATTERY / MOUNT	Shimano Battery BT-DN110-1
CHARGER / PWR CABLE	Shimano Battery charger SM-BCR2, including charging cord for usb
CRANKSET	Shimano Dura Ace FC-R9100 52x36T, Hollowtech II, Crank Length: 165mm-44cm, 170mm-47/53cm, 172.5mm-55/59cm, 175mm-61cm
BOTTOM BRACKET	Shimano SM-BB92-41B, PressFit Road
CHAIN	Shimano Dura Ace CN-HG901-11

CASSETTE / FREEWHEEL	Shimano Dura Ace CS-R9100, 11-12-13-14-15-17-19-21-23-25-28T
BRAKE	Shimano Dura Ace BR-R9110 direct mount type, pad R55C4
BRAKE LEVER	included w/shifters
RIM/WHEELSET	Fulcrum Racing Zero C17
TIRE	Vittoria Corsa G2.0 graphene 700x25, 320TPI, Folding, black
STEM	Integrated w/handlebar
HANDLEBAR	Vision Metron 5D Integrated Aero bar, Bar/stem Integrated, material UD Weave Carbon, drop 125mm, reach 80mm, Di2 compatible, Ext: 100x400mm-44/50cm, 110x420mm-53/55cm, 120x420mm-57/59cm, 130x440mm-61cm
GRIP / TAPE	Black soft Microfiber tapes w/shockproof Eva-139
SEATPOST	Oltre Full Carbon Aero; clamp with alloy head adjustable and reversible +/- 35mm, length: 250mm-44/47cm, 300mm-50/53cm, 350mm-55/59cm, 380mm-61cm, Setback: 25mm/-10mm
SADDLE	Fi'zi:k Arione R1, thermowelded MicroTex cover, Composite carbon co-injected Nylon shell w/WingFlex , carbon braided 7x9 rails, Integrated Clip System
BOTTLE CAGE	Reparto Corse Carbon fiber, UD matt finish
WATER BOTTLE	Bianchi Loli 600ml

OLTRE XR4 - DURA ACE 11SP COMPACT

CODE	YPB04
COLOR	5K-CK16/Black Full Glossy, 2R-Black/Graphite Full Glossy, Tavolozza
FRAME	Oltre XR4 carbon w/Countervail, mechanical/electronic shifting compatible, head tube 1.4" - 1.1/8", direct mount brakes, PressFit 86,5x41mm BB,sizes 44-47-50-53-55-57-59-61cm
BOLTS / HARDWARE	AL7075-T6 large button head bolts, Torx M5*14mm x 4pcs, celeste color with Bianchi logo
SEATPOST CLAMP	included in the frame
HEADSET	Fsa Orbit C-33 Matt UD Carbon 1.1/8"›1.1/4", 45°- 45° ACB bearings, w/Carbon custom cap specific for Metron 5D integrated handlebar, for 47mm/52mm OD head tube, NO.44/CF-R/5D
FORK	Bianchi Full Carbon Aero w/Countervail, 1.1/8›1.4" integrated head
SHIFTER	Shimano Dura Ace ST-R9100 2x11sp
REAR DERAILLEUR	Shimano Dura Ace RD-R9100 SS 11sp, shadow design, direct attachment
FRONT DERAILLEUR	Shimano Dura Ace FD-R9100 11sp, brazed-on type
CRANKSET	Shimano Dura FC-R9100 50x34T, Hollowtech II, Crank Length: 165mm-44cm, 170mm-47/53cm, 172.5mm-55/59cm, 175mm-61cm
BOTTOM BRACKET	Shimano SM-BB92-41B, PressFit Road
CHAIN	Shimano Dura Ace CN-HG901-11
CASSETTE / FREEWHEEL	Shimano Dura Ace CS-R9100, 11-12-13-14-15-17-19-21-23-25-28T
BRAKE	Shimano Dura Ace BR-R9110 direct mount type, pad R55C4

BRAKE LEVER	included w/shifters
RIM/WHEELSET	Fulcrum Racing Zero C17
TIRE	Vittoria Corsa G2.0 graphene 700x25, 320TPI, Folding, black
STEM	Integrated w/handlebar
HANDLEBAR	Vision Metron 5D Integrated Aero bar, Bar/stem Integrated, material UD Weave Carbon, drop 125mm, reach 80mm, Di2 compatible, Ext: 100x400mm-44/50cm, 110x420mm-53/55cm, 120x420mm-57/59cm, 130x440mm-61cm
GRIP / TAPE	Black soft Microfiber tapes w/shockproof Eva-139
SEATPOST	Oltre Full Carbon Aero; clamp with alloy head adjustable and reversible +/- 35mm, length: 250mm-44/47cm, 300mm-50/53cm, 350mm-55/59cm, 380mm-61cm, Setback: 25mm/-10mm
SADDLE	Fi'zi:k Arione R1, thermowelded MicroTex cover, Composite carbon co-injected Nylon shell w/WingFlex , carbon braided 7x9 rails, Integrated Clip System
BOTTLE CAGE	Reparto Corse Carbon fiber, UD matt finish
WATER BOTTLE	Bianchi Loli 600ml

OLTRE XR4 - DURA ACE 11SP COMPACT

CODE	YPBZ6
COLOR	5K-CK16/Black Full Glossy, 2R-Black/Graphite Full Glossy, Tavolozza
FRAME	Oltre XR4 carbon w/Countervail, mechanical/electronic shifting compatible, head tube 1.4" - 1.1/8", direct mount brakes, PressFit 86,5x41mm BB,sizes 44-47-50-53-55-57-59-61cm
BOLTS / HARDWARE	AL7075-T6 large button head bolts, Torx M5*14mm x 4pcs, celeste color with Bianchi logo
SEATPOST CLAMP	included in the frame
HEADSET	Fsa Orbit C-33, 1.1/8"-1.4", 45°- 45 ACB bearings, w/Carbon custom top cap for normal stem
FORK	Bianchi Full Carbon Aero w/Countervail, 1.1/8>1.4" integrated head
SHIFTER	Shimano Dura Ace ST-R9100 2x11sp
REAR DERAILLEUR	Shimano Dura Ace RD-R9100 SS 11sp, shadow design, direct attachment
FRONT DERAILLEUR	Shimano Dura Ace FD-R9100 11sp, brazed-on type
CRANKSET	Fsa SL-K Light Compact ABS BB386 EVO 50x34T, Hollow Carbon Monocoque crank Q-Factor 147mm, Crank Length: 165mm-44cm, 170mm-47/54cm , 172.5mm-55/59cm , 175mm-61cm
BOTTOM BRACKET	Fsa Adapter BB386 EVO cranksets on PressFit 86.5x41mm
CHAIN	Shimano Ultegra CN-HG701-11, 11sp
CASSETTE / FREEWHEEL	Shimano Ultegra CS-R8000, 11-12-13-14-15-17-19-21-23-25-28T
BRAKE	Shimano Dura Ace BR-R9110 direct mount type, pad R55C4
BRAKE LEVER	included w/shifters

RIM/WHEELSET	Fulcrum Racing 418, C17 R400 Aluminum rims , 35mm profile
TIRE	Vittoria Rubino Pro G2.0 graphene 700x25, 150TPI, Folding, black
STEM	Reparto Corse 3D Forged Alloy 2014, rise -8°, 1.1/8", Ext: 70mm-44/47cm, 90mm-50cm, 100mm-53cm, 110mm-55cm, 120mm-57/59cm, 130mm-61cm
HANDLEBAR	Reparto Corse Aero Compact, Alloy 2014 diam. 31,8mm, reach 80mm, drop 130mm, Size: 400mm-44/50cm, 420mm-53/57cm, 440mm-59/61cm
GRIP / TAPE	Black soft Microfiber tapes w/shockproof Eva-139
SEATPOST	Oltre Full Carbon Aero; clamp with alloy head adjustable and reversible +/- 35mm, length: 250mm-44/47cm, 300mm-50/53cm, 350mm-55/59cm, 380mm-61cm, Setback: 25mm/-10mm
SADDLE	Fi'zi:k Arione R3 k:ium; MicroTex Gummy cover, Fiberglass Thermoplastic shell w/Wing Flex, k:ium rails, Integrated Clip System
BOTTLE CAGE	Reparto Corse Carbon fiber, UD matt finish
WATER BOTTLE	Bianchi Loli 600ml

OLTRE XR4 - ULTEGRA DI2 11SP COMPACT

CODE	YPBL9
COLOR	5K-CK16/Black Full Glossy, 2R-Black/Graphite Full Glossy, Tavolozza
FRAME	Oltre XR4 carbon w/Countervail, mechanical/electronic shifting compatible, head tube 1.4" - 1.1/8", direct mount brakes, PressFit 86,5x41mm BB,sizes 44-47-50-53-55-57-59-61cm
BOLTS / HARDWARE	AL7075-T6 large button head bolts, Torx M5*14mm x 4pcs, celeste color with Bianchi logo
SEATPOST CLAMP	included in the frame
HEADSET	Fsa Orbit C-33, 1.1/8"-1.4", 45°- 45 ACB bearings, w/Carbon custom top cap for normal stem
FORK	Bianchi Full Carbon Aero w/Countervail, 1.1/8>1.4" integrated head
SHIFTER	Shimano Ultegra Di2 ST-R8050 2x11sp
REAR DERAILLEUR	Shimano Ultegra Di2 RD-R8050 SS 11sp, top normal, Shadow Design, direct attachment, Max 30T
FRONT DERAILLEUR	Shimano Ultegra Di2 FD-R8050, brazed-on type
ELECTRIC CABLE	Shimano Junction-A SM-EW90-A, Dura-Ace Di2, E-Tube port X3, charging port X1
BATTERY / MOUNT	Shimano Battery BT-DN110-1
CHARGER / PWR CABLE	Shimano Battery charger SM-BCR2, including charging cord for usb
CRANKSET	Shimano Ultegra FC-R8000 50x34T, Hollowtech II, Crank Length: 165mm-44cm, 170mm-47/53cm, 172.5mm-55/59cm, 175mm-61cm
BOTTOM BRACKET	Shimano SM-BB72-41B, PressFit
CHAIN	Shimano Ultegra CN-HG701-11, 11sp
CASSETTE / FREEWHEEL	Shimano Ultegra CS-R8000, 11-12-13-14-15-17-19-21-23-25-28T

BRAKE	Shimano Ultegra BR-R8010, Direct Mount, w/shoe: R55C4
BRAKE LEVER	included w/shifters
RIM/WHEELSET	Fulcrum Racing 418, C17 R400 Aluminum rims, profile 35mm
TIRE	Vittoria Corsa G2.0 graphene 700x25, 320TPI, Folding, black
STEM	Integrated w/handlebar
HANDLEBAR	Vision Metron 5D, drop 125mm, reach 80mm, Ext: 100x400mm-44/50cm, 110x420mm-53/55cm, 120x420mm-57/59cm, 130x440mm-61cm
GRIP / TAPE	Black soft Microfiber tapes w/shockproof Eva-139
SEATPOST	Oltre Full Carbon Aero; clamp with alloy head adjustable and reversible +/- 35mm, length: 250mm-44/47cm, 300mm-50/53cm, 350mm-55/59cm, 380mm-61cm, Setback: 25mm/-10mm
SADDLE	Fi'zi:k Arione R3 k:ium; MicroTex Gummy cover, Fiberglass Thermoplastic shell w/Wing Flex, k:ium rails, Integrated Clip System
BOTTLE CAGE	Reparto Corse Carbon fiber, UD matt finish
WATER BOTTLE	Bianchi Loli 600ml

OLTRE XR4 - SRAM RED ETAP AXS 12SP

CODE	YPBL3
COLOR	5K-CK16/Black Full Glossy, 2R-Black/Graphite Full Glossy, Tavolozza
FRAME	Oltre XR4 carbon w/Countervail, mechanical/electronic shifting compatible, head tube 1.4" - 1.1/8", direct mount brakes, PressFit 86,5x41mm BB,sizes 44-47-50-53-55-57-59-61cm
BOLTS / HARDWARE	AL7075-T6 large button head bolts, Torx M5*14mm x 4pcs, celeste color with Bianchi logo
SEATPOST CLAMP	included in the frame
HEADSET	Fsa Orbit C-33 Matt UD Carbon 1.1/8"›1.1/4", 45°- 45° ACB bearings, w/Carbon custom cap specific for Metron 5D integrated handlebar, for 47mm/52mm OD head tube, NO.44/CF-R/5D
FORK	Bianchi Full Carbon Aero w/Countervail, 1.1/8›1.4" integrated head
SHIFTER	Sram Red eTap AXS D1 2x12sp
REAR DERAILLEUR	Sram Red eTap AXS D1 12sp
FRONT DERAILLEUR	Sram Red eTap AXS D1, brazed on type
BATTERY / MOUNT	Sram eTap EP Powerpack, 2 batteries
CHARGER / PWR CABLE	Sram battery charger
CRANKSET	Sram Red D1 48x35T, Crank Length: 165mm-44cm, 170mm-47/53cm, 172.5mm-55/59cm, 175mm-61cm
BOTTOM BRACKET	Sram PressFit Road 86,5x41mm
CHAIN	Sram Red D1 12sp
CASSETTE / FREEWHEEL	Sram Red XG-1290 D1 12sp, 10-11-12-13-14-15-16-17-19-21-24-28T
BRAKE	Sram S900, Direct mount

RIM/WHEELSET	Fulcrum Racing Zero C17, w/XDR body
TIRE	Vittoria Corsa G2.0 graphene 700x25, 320TPI, Folding, black
STEM	Integrated w/handlebar
HANDLEBAR	Vision Metron 5D Integrated Aero bar, Bar/stem Integrated, material UD Weave Carbon, drop 125mm, reach 80mm, Di2 compatible, Ext: 100x400mm-44/50cm, 110x420mm-53/55cm, 120x420mm-57/59cm, 130x440mm-61cm
GRIP / TAPE	Black soft Microfiber tapes w/shockproof Eva-139
SEATPOST	Oltre Full Carbon Aero; clamp with alloy head adjustable and reversible +/- 35mm, length: 250mm-44/47cm, 300mm-50/53cm, 350mm-55/59cm, 380mm-61cm, Setback: 25mm/-10mm
SADDLE	Fi'zi:k Arione R1, thermowelded MicroTex cover, Composite carbon co-injected Nylon shell w/WingFlex , carbon braided 7x9 rails, Integrated Clip System
BOTTLE CAGE	Reparto Corse Carbon fiber, UD matt finish
WATER BOTTLE	Bianchi Loli 600ml

OLTRE XR4 - KIT TELAIO

CODE	XPB03
COLOR	5K-CK16/Black Full Glossy, 2R-Black/Graphite Full Glossy, Tavolozza
FRAME	Oltre XR.4 Carbon w/Countervail, mechanical/electronic shifting compatible, headset 1.1/8"›1.1/4", direct mount brakes, BB PressFit 86,5x41mm, sizes 44-47-50-53-55-57-59-61cm
BOLTS / HARDWARE	AL7075-T6 large button head bolts, Torx M5*14mm x 4pcs, celeste color with Bianchi logo
SEATPOST CLAMP	included in the frame
HEADSET	Fsa Orbit C-33, 1.1/8"-1.4", 45°- 45 ACB bearings, w/Carbon custom top cap for normal stem
FORK	Bianchi Full Carbon Aero w/Countervail, 1.1/8›1.4" integrated head
SEATPOST	Oltre Full Carbon Aero; clamp with alloy head adjustable and reversible +/- 35mm, length: 250mm-44/47cm, 300mm-50/53cm, 350mm-55/59cm, 380mm-61cm, Setback: 25mm/-10mm

UAE
JUMBO
VISMA
Bianchi
AGU
letsgo

OLTRE XR3 DISC

POSITIONING
Racing disc frame and fork engineered with Bianchi CV system. A well-balanced fast road bike with aero profiles, with rigidity and handling you would expect from the ultimate Oltre frame platform but more affordable.

COURSE/TERRAIN
Road, flat and downhill segments, hilly and fast courses. Oltre XR3 hydraulic disc brakes are impervious to adverse weather conditions.

END USE DESTINATION
All-round riders with a true racing soul.
Ideal for race warriors.

KEY FEATURES
- Aero shape disc brake carbon frame with Counterval material
- Integrated fork
- Thru axle 12mm x 100/142mm
- Flat mount calipers system
- Full carbon seatpost, easy to adjust
- Best performance-to-price ratio

LIGHTWEIGHT ●●●●●●○○○○
DESIGN ●●●●●●●●●○
COMFORT ●●●●●●●○○○
PERFORMANCE ●●●●●●●●○○

GEOMETRY - RACING

MIS-SLP											
A1	AS	B1	BS	C	D	E	F	G	G1	Y	X
470	426	512	496	410	59	110	578	74.5°	70.5°	495	375
500	454	523	509	410	59	115	580	74.5°	71.5°	503	382
530	480	534	519	410	68	130	582	74°	72°	529	383
550	501	549	534	410	68	145	587	73.5°	72.5°	546	388
570	519	560	544	410	68	160	593	73.5°	73°	561	393
590	539	575	559	412	68	180	603	73°	73°	580	396
610	559	586	568	414	68	200	603	72.5°	73.5°	601	397

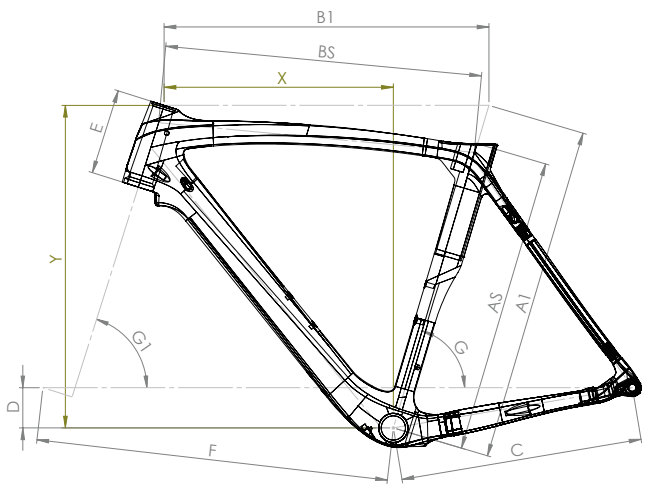

DISC BRAKE SYSTEM

- Wider fork blade and rear dropout with flat mount system (Shimano standard)
- Thru axle 12mm x 100/142mm QR50 model with alloy lever
- Compatible with 140mm and 160mm rotor

FORK

- Full carbon 1.1/8" to 1.5" with Countervail® material
- Head crown tube 1.5" with integrated design for perfect head tube connection
- Flat mount system (Shimano standard)
- Developed specifically for disc brakes
- Internal hydraulic cable guide housing
- Reactive geometry
- Super rigid
- Weight: 450g

AERO SEATPOST

- Aero seatpost with integrated look and adjustable head clamp offset (25mm or -10mm)
- Hidden seatpost clamp for perfect aerodynamic design and nice looking

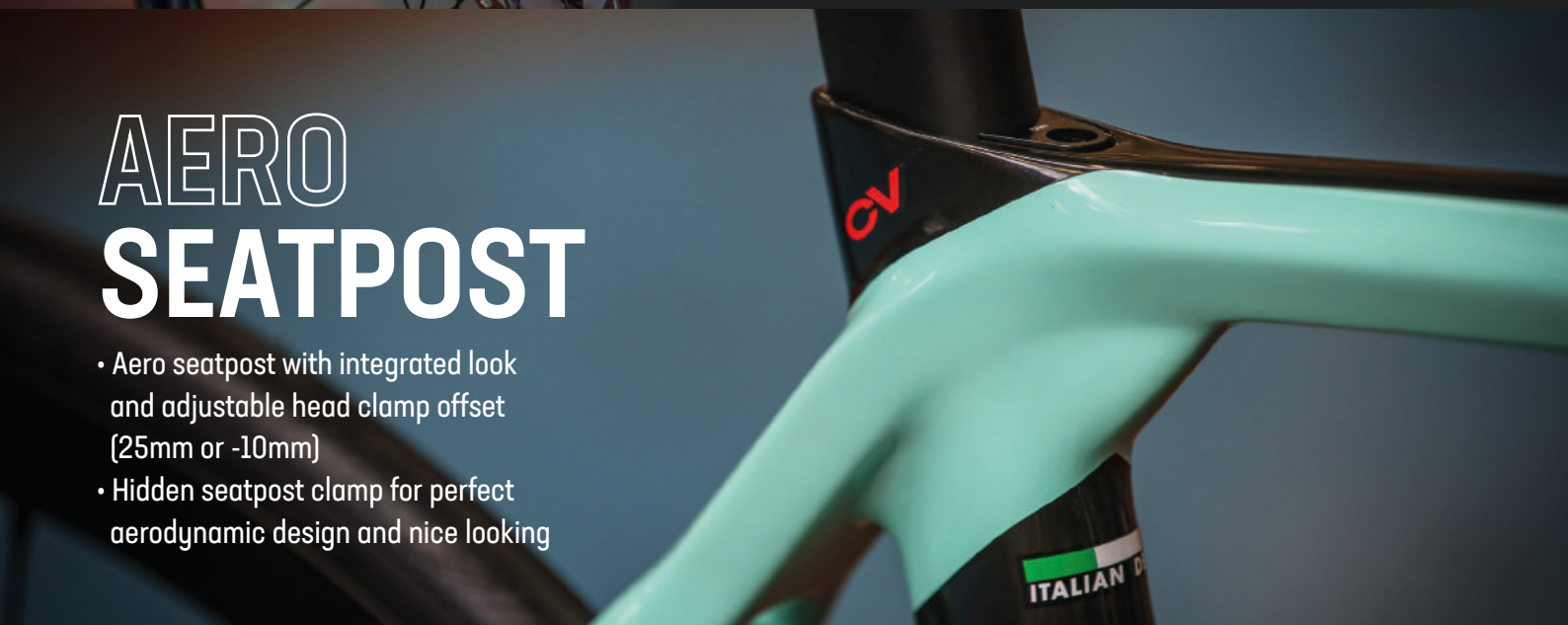

OLTRE XR3 DISC - ULTEGRA DI2 11SP COMPACT

CODE	YPB18
COLOR	5K - CK16/Black Full Glossy
FRAME	Oltre XR3 carbon w/Countervail, mechanical/electronic shifting compatible, UTSS SS, carbon dropout, PressFit 86,5x41mm BB, flat mount caliper, thru axle 12x142mm, sizes 47-50-53-55-57-59-61cm
SEATPOST CLAMP	included in the frame
HEADSET	Fsa Orbit C-40-ACB ; NO.42/ACB, Sealed ACB Bearings 1.1/8" ACB Top, 1.5" ACB Btm (for 46/56mm Head Tubes), w/15mm alloy cap
FORK	Bianchi Full Carbon Aero Disc, 1.5">1.1/8", flat Mount calipers, thru axle 12x100mm
SHIFTER	Shimano Ultegra Di2 ST-R8070 2x11sp
REAR DERAILLEUR	Shimano Ultegra Di2 RD-R8050 SS 11sp, top normal, Shadow Design, direct attachment, Max 30T
FRONT DERAILLEUR	Shimano Ultegra Di2 FD-R8050, brazed-on type , w/ 34.9mm clamp band adapter
ELECTRIC CABLE	Shimano Junction-A SM-EW90-A, Dura-Ace Di2, E-Tube port X3, charging port X1
BATTERY / MOUNT	Shimano Battery BT-DN110-1
CHARGER / PWR CABLE	Shimano Battery charger SM-BCR2, including charging cord for usb
CRANKSET	Shimano Ultegra FC-R8000 52x36T, Hollowtech II, Crank Length: 170mm-47/53cm, 172.5mm-55/59cm, 175mm-61cm
BOTTOM BRACKET	Shimano SM-BB72-41B, PressFit
CHAIN	Shimano Ultegra CN-HG701-11, 11sp
CASSETTE / FREEWHEEL	Shimano Ultegra CS-R8000, 11-12-13-14-15-17-19-21-23-25-28T
BRAKE	Shimano BR-R8070 Hydraulic disc brake, flat mount calipers

BRAKE LEVER	included w/shifters
DISC ROTOR	Shimano SM-RT800 Center Lock, diam. 160mm
RIM/WHEELSET	Fulcrum Racing 418 disc brake, R400 aluminium asymetric rims 622x17c, tubeless ready, profile 34mm, thru axle front 12x100mm, rear 12x142mm, Center Lock AFS
TIRE	Vittoria Rubino Pro G2.0 graphene 700x28, 150TPI, Folding, Black
STEM	Reparto Corse 3D Forged alloy 6061, rise +/-6°, , 1.1/8", Ext: 90mm-47/50cm, 100mm-53cm, 110mm-55/57cm, 120mm-59cm, 130mm-61cm
HANDLEBAR	Reparto Corse Aero Compact, alloy 6061 diam. 31,8mm, reach 74mm, drop 116mm, Size: 400mm-44/53cm, 420mm-55/59cm, 440mm-61cm
GRIP / TAPE	La Spirale Ribbon cork w/carbon look plugs w/Bianchi logo
SEATPOST	Oltre Full Carbon Aero; clamp with alloy head adjustable and reversible +/- 35mm, length: 250mm-44/47cm, 300mm-50/53cm, 350mm-55/59cm, 380mm-61cm, Setback: 25mm/-10mm
SADDLE	Fi'zi:k Antares R7, MicroTex cover, nylon carbon reinforced shell w/WingFlex, rail S alloy rails, 274x142mm
BOTTLE CAGE	Elite Paron Race composit
WATER BOTTLE	Bianchi Loli 600ml

OLTRE XR3 DISC - ULTEGRA 11SP COMPACT

CODE	YPBK7
COLOR	5K - CK16/Black Full Glossy, 2R - Black/Graphite Full Glossy
FRAME	Oltre XR3 carbon w/Countervail, mechanical/electronic shifting compatible, UTSS SS, carbon dropout, PressFit 86,5x41mm BB, flat mount caliper, thru axle 12x142mm, sizes 47-50-53-55-57-59-61cm
SEATPOST CLAMP	included in the frame
HEADSET	Fsa Orbit C-40-ACB ; NO.42/ACB, Sealed ACB Bearings 1.1/8" ACB Top, 1.5" ACB Btm (for 46/56mm Head Tubes), w/15mm alloy cap
FORK	Bianchi Full Carbon Aero Disc, 1.5"›1.1/8", flat Mount calipers, thru axle 12x100mm
SHIFTER	Shimano Ultegra ST-R8020 2x11sp, hydraulic discbrake, Shimano Ultegra ST-R8025 2x11sp, smallerlever size for sizes 47/53cm
REAR DERAILLEUR	Shimano Ultegra RD-R8000 SS 11sp, top normal shadow design, direct attachment, Max 25-30T for double
FRONT DERAILLEUR	Shimano Ultegra FD-R8000, down swing, band type (34.9mm), 61-66° for 46/53T cl: 43,5mm
CRANKSET	Shimano Ultegra FC-R8000 52x36T, Hollowtech II, Crank Length: 170mm-47/53cm, 172.5mm-55/59cm, 175mm-61cm
BOTTOM BRACKET	Shimano SM-BB72-41B, PressFit
CHAIN	Shimano Ultegra CN-HG701-11, 11sp
CASSETTE / FREEWHEEL	Shimano Ultegra CS-R8000, 11-12-13-14-15-17-19-21-23-25-28T
BRAKE	Shimano BR-R8070 Hydraulic disc brake, flat mount calipers
BRAKE LEVER	included w/shifters

DISC ROTOR	Shimano SM-RT800 Center Lock, diam. 160mm
RIM/WHEELSET	Fulcrum Racing 418 disc brake, R400 aluminium asymetric 622x17c, tubeless ready, profile 34mm, thru axle front 12x100mm, rear 12x142mm, Center Lock AFS
TIRE	Vittoria Rubino Pro G2.0 graphene 700x28, 150TPI, Folding, black
STEM	Reparto Corse 3D Forged alloy 6061, rise +/-6°, , 1.1/8", Ext: 90mm-47/50cm, 100mm-53cm, 110mm-55/57cm, 120mm-59cm, 130mm-61cm
HANDLEBAR	Reparto Corse Aero Compact, alloy 6061 diam. 31,8mm, reach 74mm, drop 116mm, Size: 400mm-44/53cm, 420mm-55/59cm, 440mm-61cm
GRIP / TAPE	La Spirale Ribbon cork w/carbon look plugs w/Bianchi logo
SEATPOST	Oltre Full Carbon Aero; clamp with alloy head adjustable and reversible +/- 35mm, length: 250mm-44/47cm, 300mm-50/53cm, 350mm-55/59cm, 380mm-61cm, Setback: 25mm/-10mm
SADDLE	Fi'zi:k Antares R7, MicroTex cover, nylon carbon reinforced shell w/WingFlex, S alloy rail, 274x142mm
BOTTLE CAGE	Elite Paron Race composit
WATER BOTTLE	Bianchi Loli 600ml

OLTRE XR3

POSITIONING
Racing frame and fork engineered with Bianchi CV system. A well-balanced fast road bike with aero profiles, with rigidity and handling you would expect from the ultimate Oltre frame platform but more affordable.

COURSE/TERRAIN
Road, flat and downhill segments, hilly and fast courses

END USE DESTINATION
All-round riders with a true racing soul.
Ideal for race warriors.

KEY FEATURES
- High strength + medium modulus carbon fibers with Countervail® material
- Aero shape and design
- Tapered aero headtube 1.1/8" to 1.4", inspired by Oltre XR4 profiles
- Aero seatpost with integrated look and adjustable head clamp offset 25mm or 10mm
- Hidden seatpost clamp for perfect aerodynamic design
- BB set Press fit 86.5 x 41
- Internal cable routing
- Full carbon dropout with metal insert
- 7 sizes: 47, 50, 53, 55, 57, 59 and 61cm
- Weight in 55 size: 1110g (+/- 5%)
- Best performance-to-price ratio

LIGHTWEIGHT ●●●●●●○○○○
DESIGN ●●●●●●●●●○
COMFORT ●●●●●●●○○○
PERFORMANCE ●●●●●●●●○○

GEOMETRY - RACING

MIS-SLP											
A1	AS	B1	BS	C	D	E	F	G	G1	Y	X
470	420	515	500	400	58	110	578	74.5°	70.5°	495	375
500	450	525	514	400	58	115	580	74.5°	71.5°	503	383
530	475	535	523	406	68	130	581	74°	72°	529	383
550	495	550	538	407	68	145	587	73.5°	72.5°	545	388
570	515	560	549	407	68	160	593	73.5°	73°	561	393
590	535	575	563	409	68	180	603	73°	73°	580	397
610	555	585	572	411	68	200	607	72.5°	73.5°	601	397

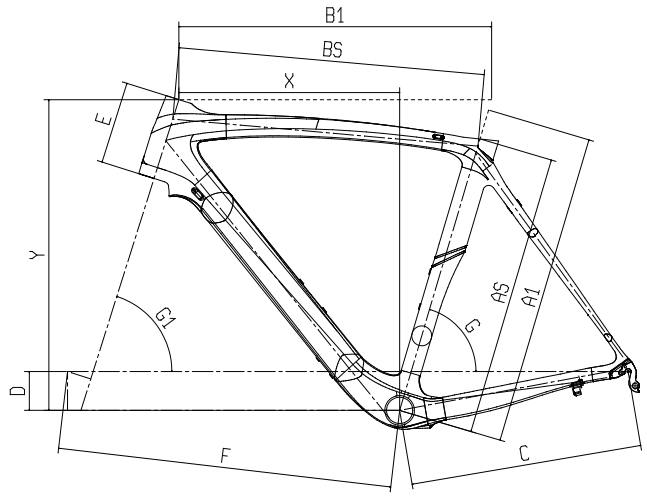

OLTRE XR3 - ULTEGRA DI2 11SP 52/36

THE IMAGE SHOWN IS INDICATIVE ONLY. Components and graphic details may differ from the actual model.

CODE	YPBL7
COLOR	5K - CK16/Black Full Glossy
FRAME	Oltre XR3 carbon w/Countervail, mechanical/electronic shifting compatible, UTSS seat stays, carbon dropout, PressFit 86,5x41mm, sizes 47-50-53-55-57-59-61cm
SEATPOST CLAMP	included in the frame
HEADSET	Fsa Orbit C-40-ACB ; NO.42/ACB, Sealed ACB Bearings 1.1/8" ACB Top, 1.5" ACB Btm (for 46/56mm Head Tubes), w/15mm alloy cap
FORK	Bianchi Full Carbon 1.5"›1.1/8" integrated head
SHIFTER	Shimano Ultegra Di2 11sp ST-R8050 2x11sp
REAR DERAILLEUR	Shimano Ultegra Di2 RD-R8050 SS 11sp, top normal Shadow Design, direct attachment, Max 30T
FRONT DERAILLEUR	Shimano Ultegra Di2 FD-R8050, brazed-on type w/34.9mm clamp band adapter
ELECTRIC CABLE	Shimano Junction-A SM-EW90-A, Dura-Ace Di2, E-Tube port X3, charging port X1
BATTERY / MOUNT	Shimano Battery BT-DN110-1
CHARGER / PWR CABLE	Shimano Battery charger SM-BCR2, including charging cord for usb
CRANKSET	Shimano Ultegra FC-R8000 52x36T, Hollowtech II, Crank Length: 170mm-47/53cm, 172.5mm-55/59cm, 175mm-61cm
BOTTOM BRACKET	Shimano SM-BB72-41B, PressFit
CHAIN	Shimano Ultegra CN-HG701-11, 11sp
CASSETTE / FREEWHEEL	Shimano Ultegra CS-R8000, 11-12-13-14-15-17-19-21-23-25-28T
BRAKE	Shimano Ultegra BR-R8000, w/shoe R55C4

BRAKE LEVER	included w/shifters
RIM/WHEELSET	Fulcrum Racing 418, C17 R400 Aluminum rims, profile 35mm
TIRE	Vittoria Rubino IV G2.0 graphene 700x25, 60TPI, Folding, black
STEM	Reparto Corse 3D Forged alloy 6061, rise +/-6°, , 1.1/8", Ext: 90mm-47/50cm, 100mm-53cm, 110mm-55/57cm, 120mm-59cm, 130mm-61cm
HANDLEBAR	Reparto Corse Aero Compact, alloy 6061 diam. 31,8mm, reach 74mm, drop 116mm, Size: 400mm-44/53cm, 420mm-55/59cm, 440mm-61cm
GRIP / TAPE	La Spirale Ribbon cork w/carbon look plug w/Bianchi logo
SEATPOST	Oltre Full Carbon Aero; clamp with alloy head adjustable and reversible +/- 35mm, length: 250mm-44/47cm, 300mm-50/53cm, 350mm-55/59cm, 380mm-61cm, Setback: 25mm/-10mm
SADDLE	Fi'zi:k Antares R7, MicroTex cover, nylon carbon reinforced shell w/WingFlex, S alloy rail, 274x142mm
BOTTLE CAGE	Alloy black
WATER BOTTLE	Celeste w/Bianchi logo

OLTRE XR3 - ULTEGRA 11SP 52/36

THE IMAGE SHOWN IS INDICATIVE ONLY. Components and graphic details may differ from the actual model.

CODE	YPBK6
COLOR	2R - Black/Graphite Full Glossy 5K - CK16/Black Full Glossy
FRAME	Oltre XR3 carbon w/Countervail, mechanical/electronic shifting compatible, UTSS seat stays, carbon dropout, PressFit 86,5x41mm, sizes 47-50-53-55-57-59-61cm
SEATPOST CLAMP	included in the frame
HEADSET	Fsa Orbit C-40-ACB ; NO.42/ACB, Sealed ACB Bearings 1.1/8" ACB Top, 1.5" ACB Btm (for 46/56mm Head Tubes), w/15mm alloy cap
FORK	Bianchi Full Carbon 1.5"›1.1/8" integrated head
SHIFTER	Shimano Ultegra ST-R8000 2x11sp
REAR DERAILLEUR	Shimano Ultegra RD-R8000 SS 11sp, top normal Shadow Design, direct attachment, Max 25-30T for double
FRONT DERAILLEUR	Shimano Ultegra FD-R8000, down swing, band type (34.9mm), 61-66° for 46/53T cl: 43,5mm
CRANKSET	Shimano Ultegra FC-R8000 52x36T, Hollowtech II, Crank Length: 170mm-47/53cm, 172.5mm-55/59cm, 175mm-61cm
BOTTOM BRACKET	Shimano SM-BB72-41B, PressFit
CHAIN	Shimano Ultegra CN-HG701-11, 11sp
CASSETTE / FREEWHEEL	Shimano Ultegra CS-R8000, 11-12-13-14-15-17-19-21-23-25-28T
BRAKE	Shimano Ultegra BR-R8000, w/shoe R55C4
BRAKE LEVER	included w/shifters
RIM/WHEELSET	Fulcrum Racing 618, C17 R500 aluminum rims, profile F 24.5mm, R. 27.5mm

TIRE	Vittoria Rubino IV G2.0 graphene 700x25, 60TPI, Folding, black
STEM	Reparto Corse 3D Forged alloy 6061, rise +/-6°, , 1.1/8", Ext: 90mm-47/50cm, 100mm-53cm, 110mm-55/57cm, 120mm-59cm, 130mm-61cm
HANDLEBAR	Reparto Corse Aero Compact, alloy 6061 diam. 31,8mm, reach 74mm, drop 116mm, Size: 400mm-44/53cm, 420mm-55/59cm, 440mm-61cm
GRIP / TAPE	La Spirale Ribbon cork w/carbon look plug w/Bianchi logo
SEATPOST	Oltre Full Carbon Aero; clamp with alloy head adjustable and reversible +/- 35mm, length: 250mm-44/47cm, 300mm-50/53cm, 350mm-55/59cm, 380mm-61cm, Setback: 25mm/-10mm
SADDLE	Fi'zi:k Antares R7, MicroTex cover, nylon carbon reinforced shell w/WingFlex, S alloy rails, 274x142mm
BOTTLE CAGE	Elite Paron Race composit
WATER BOTTLE	Bianchi Loli 600ml

SPECIALISSIMA

POSITIONING

Ultralight racing frame (780g*) engineered with the latest evolution of Countervail vibration cancelling technology. Reactive climbing machine with unparalleled control and precision in the descents.

COURSE/TERRAIN

Road, long climbs and descents.

END USE DESTINATION

Pros and expert riders.
Ideal for long marathon events.

KEY FEATURES

- Monocoque carbon hi-modulus frame with Countervail® material
- Tapered headtube 1.1/8" to 1.4" to improve rigidity of the front part, and reduce the weight
- Double compatibility mechanic and electronic groupset
- Internal cable routing
- BB set Press fit 86.5 x 41
- Seatube dimension: 27,2mm
- Full carbon dropout with metal insert
- 7 sizes: 47, 50, 53, 55, 57, 59, 61cm
- Weight: 780g (*55 size, black color frame, +/- 5%)
- Hand painted in Italy
- Tavolozza on-line color configurator

LIGHTWEIGHT ●●●●●●●●●●
DESIGN ●●●●●●●●●○
COMFORT ●●●●●○○○○○
PERFORMANCE ●●●●●●●●●●

GEOMETRY - RACING

MIS-SLP											
A1	AS	B1	BS	C	D	E	F	G	G1	Y	X
470	440	515	500	400	58	110	579	74.5°	70.5°	495	375
500	470	525	512	400	58	115	58	74.5	71.5°	503	383
530	500	535	523	406	68	130	582	74°	72°	529	383
550	520	550	537	407	68	145	588	73.5	72.5°	545	388
570	540	560	548	407	68	160	593	73.5°	73°	561	393
590	560	575	562	409	68	180	603	73°	73°	580	397
610	580	585	570	411	68	200	603	72.5°	73°	601	397

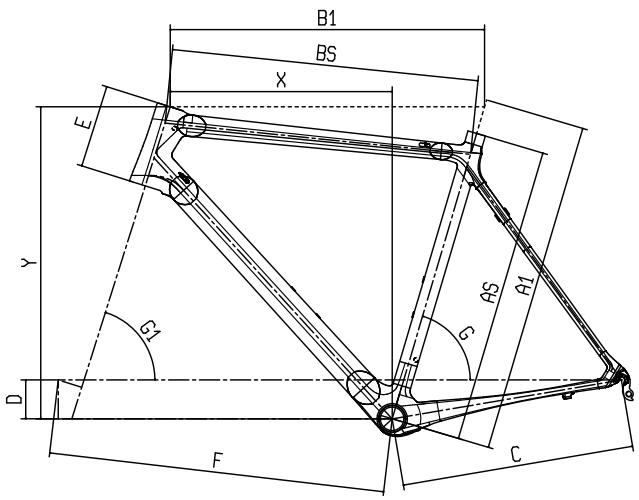

SPECIALISSIMA - SUPER RECORD EPS 12SP 52/36

THE IMAGE SHOWN IS INDICATIVE ONLY. Components and graphic details may differ from the actual model.

CODE	YPBE7
COLOR	5K-CK16/Black Full Glossy, 2J-Black Glossy/Black Matt, Tavolozza
FRAME	Specialissima super light carbon w/Countervail, 1.4"-1.1/8", PressFit 86,5x41mm BB, Seatpost diam. 27,2mm, sizes 47-50-53-55-57-59-61cm
BOLTS / HARDWARE	AL7075-T6 large button head bolts, Torx M5*14mm x 4pcs, celeste color with Bianchi logo
SEATPOST CLAMP	Carbon Ti X-Clamp 3, AL7075-T6 machined body and Titanium grade 5 M5 Screw, diam. 31.8mm
HEADSET	Fsa NO.44/CF-R, 1.1/8"›1.4" w/alloy bearings, w/carbon cap 8.7mm, for 47mm/52mm OD head tube
FORK	Bianchi Full Carbon w/Countervail, 1.1/8"›1.4"
SHIFTER	Campagnolo Super Record EPS 2x12sp Ergopower shifiting levers
REAR DERAILLEUR	Campagnolo Super Record EPS 12sp
FRONT DERAILLEUR	Campagnolo Super Record EPS 12sp brazed-on type w/FD stiffness increaser
ELECTRIC CABLE	Campagnolo EPS V4 Interface
BATTERY / MOUNT	Campagnolo EPS V4 12sp Power Unit
CHARGER / PWR CABLE	Campagnolo EPS battery charger kit for EPS V3/V4 12sp Power Unit. EEC, AUS, UK, USA compatible
CRANKSET	Campagnolo Super Record 52x36T Ultra-Torque CT TI Carbon, Crank Length: 170mm-47/53cm, 172.5mm-55/59cm, 175mm-61cm
BOTTOM BRACKET	Campagnolo Ultra Torque OS-Fit integrated cups 86,5x41mm

CHAIN	Campagnolo Super Record 12sp
CASSETTE / FREEWHEEL	Campagnolo Super Record 12sp, 11-29T
BRAKE	Campagnolo Super Record skeleton, dual pivot front & rear
BRAKE LEVER	included w/shifters
RIM/WHEELSET	DT Swiss PR 1400 DICUT Graphite 21 OXiC, 622X18, SBWT welded aluminum OXiC rims, tubeless ready w/tape and valve
TIRE	Vittoria Corsa G2.0 graphene 700x25, 320TPI, Folding, black
STEM	Fsa OS-99 CSI, AL7050 core with integrated carbon structure, AL2014/Carbon integrated, 4-bolt faceplate, bolts 6/4 Titanium, 31.8mm, angle +/-6∫, Ext: 80mm-47cm, 90mm-50cm, 100mm-53cm, 110mm-55cm, 120mm-57/59cm, 130mm-61cm
HANDLEBAR	Fsa K-Force Compact, UD Weave Carbon, diam. 31.8mm, drop 125mm, reach 80mm, 4∫ Outward Bend, Size: 400mm-47/50cm, 420mm-53/57cm, 440mm-59/61cm
GRIP / TAPE	Black soft Microfiber tapes w/shockproof Eva-139
SEATPOST	Fsa K-Force Light SB25, UD Carbon Monocoque, clamp type 2-Bolt Head "MTC", Setback 25 mm, Length 350mm, 27.2mm, Di2 Battery compatible
SADDLE	Fi'zi:k Antares R1, thermowelded MicroTex cover, Composite carbon co-injected Nylon shell w/WingFlex , carbon braided 7x9 rails, Integrated Clip System, 275x142mm
BOTTLE CAGE	Reparto Corse Carbon fiber, UD matt finish
WATER BOTTLE	Bianchi Loli 600ml

SPECIALISSIMA - DURA ACE DI2 11SP 52/36

CODE	YPBE6
COLOR	5K-CK16/Black Full Glossy, 2J-Black Glossy/Black Matt, Tavolozza
FRAME	Specialissima super light carbon w/Countervail, 1.4"-1.1/8", PressFit 86,5x41mm BB, Seatpost diam. 27,2mm, sizes 47-50-53-55-57-59-61cm
BOLTS / HARDWARE	AL7075-T6 large button head bolts, Torx M5*14mm x 4pcs, celeste color with Bianchi logo
SEATPOST CLAMP	Carbon Ti X-Clamp 3, AL7075-T6 machined body and Titanium grade 5 M5 Screw, diam. 31.8mm
HEADSET	Fsa NO.44/CF-R, 1.1/8"›1.4" w/alloy bearings, w/carbon cap 8.7mm, for 47mm/52mm OD head tube
FORK	Bianchi Full Carbon w/Countervail, 1.1/8"›1.4"
SHIFTER	Shimano Dura Ace Di2 ST-R9150 2x11sp
REAR DERAILLEUR	Shimano Dura Ace Di2 RD-R9150 SS 11sp, shadow design, direct attachment, Max 30T
FRONT DERAILLEUR	Shimano Dura Ace Di2 FD-R9150-F, braze-on type
ELECTRIC CABLE	Shimano Junction-A SM-EW90-A, Dura-Ace Di2, E-Tube port X3, charging port X1
BATTERY / MOUNT	Shimano Battery BT-DN110-1
CHARGER / PWR CABLE	Shimano Battery charger SM-BCR2, including charging cord for usb
CRANKSET	Shimano Dura Ace FC-R9100, Hollowtech II, 52x36T, Crank Length: 165mm-44cm, 170mm-47/53cm, 172.5mm-55/59cm, 175mm-61cm
BOTTOM BRACKET	Shimano SM-BB92-41B, PressFit
CHAIN	Shimano Dura Ace CN-HG901-11
CASSETTE / FREEWHEEL	Shimano Dura Ace CS-R9100, 11-12-13-14-15-17-19-21-23-25-28T

BRAKE	Shimano Dura Ace BR-R9100, shoe R55C4
RIM/WHEELSET	DT Swiss PR 1400 DICUT Graphite 21 OXiC, 622X18c, SBWT welded aluminum OXiC rims, tubeless ready w/tape and valve
TIRE	Vittoria Corsa G2.0 graphene 700x25, 320TPI, Folding, black
STEM	Fsa OS-99 CSI, AL7050 core with integrated carbon structure, AL2014/Carbon integrated, 4-bolt faceplate, bolts 6/4 Titanium, 31.8mm, angle +/-6∫, Ext: 80mm-47cm, 90mm-50cm, 100mm-53cm, 110mm-55cm, 120mm-57/59cm, 130mm-61cm
HANDLEBAR	Fsa K-Force Compact, UD Weave Carbon, diam. 31.8mm, drop 125mm, reach 80mm, 4∫ Outward Bend, Size: 400mm-47/50cm, 420mm-53/57cm, 440mm-59/61cm
GRIP / TAPE	Black soft Microfiber tapes w/shockproof Eva-139
SEATPOST	Fsa K-Force Light SB25, UD Carbon Monocoque, clamp type 2-Bolt Head "MTC", Setback 25 mm, Length 350mm, 27.2mm, Di2 Battery compatible
SADDLE	Fi'zi:k Antares R1, thermowelded MicroTex cover, Composite carbon co-injected Nylon shell w/WingFlex , carbon braided 7x9 rails, Integrated Clip System, 275x142mm
BOTTLE CAGE	Reparto Corse Carbon fiber, UD matt finish
WATER BOTTLE	Bianchi Loli 600ml

SPECIALISSIMA - DURA ACE 11SP COMPACT

THE IMAGE SHOWN IS INDICATIVE ONLY. Components and graphic details may differ from the actual model.

CODE	YPBG7
COLOR	5K-CK16/Black Full Glossy, 2J-Black Glossy/Black Matt, Tavolozza
FRAME	Specialissima super light carbon w/Countervail, 1.4"-1.1/8", PressFit 86,5x41mm BB, Seatpost diam. 27,2mm, sizes 47-50-53-55-57-59-61cm
BOLTS / HARDWARE	AL7075-T6 large button head bolts, Torx M5*14mm x 4pcs, celeste color with Bianchi logo
SEATPOST CLAMP	Carbon Ti X-Clamp 3, AL7075-T6 machined body and Titanium grade 5 M5 Screw, diam. 31.8mm
HEADSET	Fsa N0.44/CF-R, 1.1/8"›1.4" w/alloy bearings, w/carbon cap 8.7mm, for 47mm/52mm OD head tube
FORK	Bianchi Full Carbon w/Countervail, 1.1/8"›1.4"
SHIFTER	Shimano Dura Ace ST-R9100 2x11sp
REAR DERAILLEUR	Shimano Dura Ace RD-R9100 SS 11sp, shadow design, direct attachment
FRONT DERAILLEUR	Shimano Dura Ace FD-R9100 11sp, brazed-on type
CRANKSET	Shimano Dura Ace FC-R9100 Hollowtech II, 50-34T, w/o BB parts, crank length: 170mm-47/53cm, 172.5mm-55/59cm, 175mm-61cm
BOTTOM BRACKET	Shimano SM-BB92-41B, PressFit Road
CHAIN	Shimano Dura Ace CN-HG901-11
CASSETTE / FREEWHEEL	Shimano Dura Ace CS-R9100, 11-12-13-14-15-17-19-21-23-25-28T
BRAKE	Shimano Dura Ace BR-R9100, shoe R55C4
RIM/WHEELSET	DT Swiss PR 1400 DICUT Graphite 21 OXiC, 622X18c, SBWT welded aluminum OXiC rims, tubeless ready w/tape and valve

TIRE	Vittoria Corsa G2.0 graphene 700x25, 320TPI, Folding, black
STEM	Fsa OS-99 CSI, AL7050 core with integrated carbon structure, AL2014/Carbon integrated, 4-bolt faceplate, bolts 6/4 Titanium, 31.8mm, angle +/-6∫, Ext: 80mm-47cm, 90mm-50cm, 100mm-53cm, 110mm-55cm, 120mm-57/59cm, 130mm-61cm
HANDLEBAR	Fsa K-Force Compact, UD Weave Carbon, diam. 31.8mm, drop 125mm, reach 80mm, 4∫ Outward Bend, Size: 400mm-47/50cm, 420mm-53/57cm, 440mm-59/61cm
GRIP / TAPE	Black soft Microfiber tapes w/shockproof Eva-139
SEATPOST	Fsa K-Force Light SB25, UD Carbon Monocoque, clamp type 2-Bolt Head "MTC", Setback 25 mm, Length 350mm, 27.2mm, Di2 Battery compatible
SADDLE	Fi'zi:k Antares R1, thermowelded MicroTex cover, Composite carbon co-injected Nylon shell w/WingFlex , carbon braided 7x9 rails, Integrated Clip System, 275x142mm
BOTTLE CAGE	Reparto Corse Carbon fiber, UD matt finish
WATER BOTTLE	Bianchi Loli 600ml

SPECIALISSIMA - RED ETAP AXS 12SP

CODE	YPBG6
COLOR	5K-CK16/Black Full Glossy, 2J-Black Glossy/Black Matt, Tavolozza
FRAME	Specialissima super light carbon w/Countervail, 1.4"-1.1/8", PressFit 86,5x41mm BB, Seatpost diam. 27,2mm, sizes 47-50-53-55-57-59-61cm
BOLTS / HARDWARE	AL7075-T6 large button head bolts, Torx M5*14mm x 4pcs, celeste color with Bianchi logo
SEATPOST CLAMP	Carbon Ti X-Clamp 3, AL7075-T6 machined body and Titanium grade 5 M5 Screw, diam. 31.8mm
HEADSET	Fsa NO.44/CF-R, Alloy bearings 1.1/8" top 1.4" Btm, w/8.7mm Carbon top cap for 47mm/52mm OD head tube
FORK	Bianchi Full Carbon w/Countervail, 1.1/8"›1.4"
SHIFTER	Sram Red eTap AXS D1 2x12sp
REAR DERAILLEUR	Sram Red eTap AXS D1 12sp
FRONT DERAILLEUR	Sram Red eTap AXS D1 brazed on type
BATTERY / MOUNT	Sram eTap EP Powerpack, 2 batteries
CHARGER / PWR CABLE	Sram eTap battery charger
CRANKSET	Sram Red D1 46x33T, crank length: 170mm-47/53cm, 172.5mm-55/59cm, 175mm-61cm
BOTTOM BRACKET	Sram PressFit Road 86,5x41mm
CHAIN	Sram Red D1 12sp
CASSETTE / FREEWHEEL	Sram Red XG-1290 D1 12sp, 10-11-12-13-14-15-16-17-19-21-24-28T
BRAKE	Sram Red D1
RIM/WHEELSET	DT Swiss PR 1400 DICUT Graphite 21 OXiC, 622X18, SBWT welded aluminum OXiC rims, tubeless ready w/tape and valve

TIRE	Vittoria Corsa G2.0 graphene 700x25, 320TPI, Folding, black
STEM	Fsa OS-99 CSI, AL7050 core with integrated carbon structure, AL2014/Carbon integrated, 4-bolt faceplate, bolts 6/4 Titanium, 31.8mm, angle +/-6∫, Ext: 80mm-47cm, 90mm-50cm, 100mm-53cm, 110mm-55cm, 120mm-57/59cm, 130mm-61cm
HANDLEBAR	Fsa K-Force Compact, UD Weave Carbon, diam. 31.8mm, drop 125mm, reach 80mm, 4∫ Outward Bend, Size: 400mm-47/50cm, 420mm-53/57cm, 440mm-59/61cm
GRIP / TAPE	Black soft Microfiber tapes w/shockproof Eva-139
SEATPOST	Fsa K-Force Light SB25, UD Carbon Monocoque, clamp type 2-Bolt Head "MTC", Setback 25 mm, Length 350mm, 27.2mm, Di2 Battery compatible
SADDLE	Fi'zi:k Antares R1, thermowelded MicroTex cover, composite carbon co-injected Nylon shell w/WingFlex , carbon braided 7x9 rails, Integrated Clip System, 275x142mm
BOTTLE CAGE	Reparto Corse Carbon fiber, UD matt finish
WATER BOTTLE	Bianchi Loli 600ml

SPECIALISSIMA - ULTEGRA 11SP COMPACT

CODE	YPBE8
COLOR	5K-CK16/Black Full Glossy, 2J-Black Glossy/Black Matt, Tavolozza
FRAME	Specialissima super light carbon w/Countervail, 1.4"-1.1/8", PressFit 86,5x41mm BB, Seatpost diam. 27,2mm, sizes 47-50-53-55-57-59-61cm
BOLTS / HARDWARE	AL7075-T6 large button head bolts, Torx M5*14mm x 4pcs, celeste color with Bianchi logo
SEATPOST CLAMP	Carbon Ti X-Clamp 3, AL7075-T6 machined body and Titanium grade 5 M5 Screw, diam. 31.8mm
HEADSET	Fsa NO.44/CF-R, 1.1/8"›1.4" w/alloy bearings, w/carbon cap 8.7mm, for 47mm/52mm OD head tube
FORK	Bianchi Full Carbon w/Countervail, 1.1/8"›1.4"
SHIFTER	Shimano Ultegra ST-R8000 2x11sp
REAR DERAILLEUR	Shimano Ultegra RD-R8000 SS 11sp, top normal shadow design, direct attachment, Max 25-30T for double
FRONT DERAILLEUR	Shimano Ultegra FD-R8000, down swing, brazed-on type, 61-66°, max chainring 46/53T, CL: 43,5mm
CRANKSET	Shimano Ultegra FC-R8000 52x36T, Crank Length: 165mm-44cm, 170mm-47/53cm, 172.5mm-55/59cm, 175mm-61cm
BOTTOM BRACKET	Shimano SM-BB72-41B, PressFit
CHAIN	Shimano Ultegra CN-HG701-11, 11sp
CASSETTE / FREEWHEEL	Shimano Ultegra CS-R8000, 11-12-13-14-15-17-19-21-23-25-28T
BRAKE	Shimano Ultegra BR-R8000, w/shoe R55C4
RIM/WHEELSET	Fulcrum Racing 418, C17 R400 Aluminum rims, profile 35mm

TIRE	Vittoria Corsa G2.0 graphene 700x25, 320TPI, Folding, black
STEM	Reparto Corse 3D Forged alloy 2014, rise -8°, 1.1/8", Ext: 70mm-47cm, 90mm-50cm, 100mm-53cm, 110mm-55cm, 120mm-57/59cm, 130mm-61cm
HANDLEBAR	Reparto Corse Compact Flat Top, alloy 2014, diam. 31,8mm, reach 80mm, drop 130mm, Size: 400mm-47/50cm, 420mm-53/57cm, 440mm-59/61cm
GRIP / TAPE	Black soft Microfiber tapes w/shockproof Eva-139
SEATPOST	Reparto Corse UD carbon shaft, forged alloy head, diam 27.2mm, 15mm offset, length 350mm
SADDLE	Fi'zi:k Antares R7, MicroTex cover, nylon carbon reinforced shell w/WingFlex, S alloy rails, 274x142mm
BOTTLE CAGE	Reparto Corse Carbon fiber, UD matt finish
WATER BOTTLE	Bianchi Loli 600ml

SPECIALISSIMA - FRAME KIT

CODE	XPB27
COLOR	5K-CK16/Black Full Glossy, 2J-Black Glossy/Black Matt, Tavolozza
FRAME	Specialissima super light carbon w/Countervail, 1.1/8"›1.4" headset, seatpost 27,2mm, PressFit 86,5x41mm, sizes 47-50-53-55-57-59-61cm
BOLTS / HARDWARE	AL7075-T6 large button head bolts, Torx M5*14mm x 4pcs, celeste color with Bianchi logo
SEATPOST CLAMP	Carbon Ti X-Clamp 3, AL7075-T6 machined body and Titanium grade 5 M5 Screw, diam. 31.8mm
HEADSET	Fsa NO.44/CF-R, 1.1/8"›1.4" w/alloy bearings, w/carbon cap 8.7mm, for 47mm/52mm OD head tube
FORK	Bianchi Full Carbon w/Countervail, 1.1/8"›1.4"

Bianchi
Specialissima

ARIA DISC

POSITIONING
Aerodynamic bike with aero racing shape frame/fork/seatpost. Fast road bike with aero tubes profiles, rigidity and handling you would expect from a true racing bike with affordable price.

COURSE/TERRAIN
Road, flat and downhill segments, hilly and fast courses.

END USE DESTINATION
All-round riders with a true racing soul.
Ideal for race warriors, and triathlon events.

KEY FEATURES
- Specific carbon frame and fork Disc compatible
- Flat mount system (Shimano standard)
- Full carbon aero seatpost
- Thru axle 12mm front 100mm and rear OLD 142mm specific dimension model QR50 with alloy lever (M12 x P1.5)
- Compatible with 140mm and 160mm rotor
- Chain stay length 410mm
- Internal hydraulic cable guide housing in the frame and fork
- Sizes: 44, 47, 50, 53, 55, 57, 59, 61cm
- Weight in 55 size: 1150g target (+/- 5%)
- Best performance-to-price ratio

LIGHTWEIGHT ●●●●●●○○○○
DESIGN ●●●●●●●●●○
COMFORT ●●●●●●○○○○
PERFORMANCE ●●●●●●●●○○

GEOMETRY - RACING

MIS-SLP

A1	AS	B1	BS	C	D	E	F	G	G1	Y	X
440	420	505	495	410	58	95	575	75°	70.5°	481	376
470	440	515	505	410	58	105	581	74.5°	70.5°	490	379
500	470	525	519	410	58	110	582	74.5°	71.5°	499	387
530	500	535	528	410	68	125	583	74°	72°	525	385
550	520	550	541	410	68	140	588	73.5°	72.5°	541	390
570	540	560	553	410	68	155	593	73.5°	73°	557	395
590	560	575	567	412	68	175	603	73°	73°	576	397
610	580	585	576	414	68	195	607	72.5°	73°	595	398

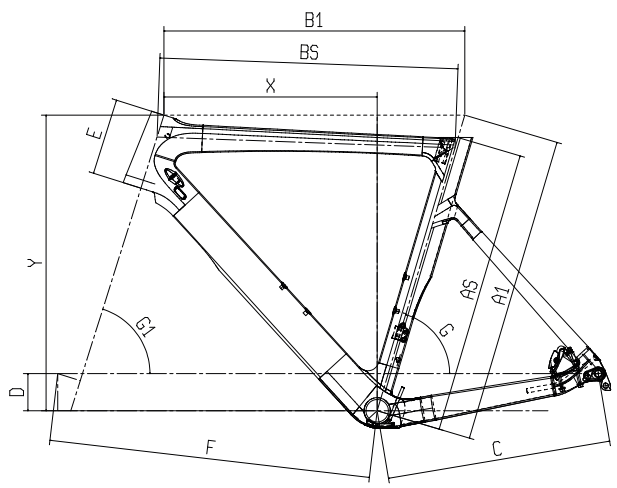

AERO SEATPOST

- Aero seatpost with integrated look and head clamp offset 20mm
- Hidden seatpost clamp for perfect aerodynamic design and nice looking
- Seatpost length:

1. **250mm=44cm**
2. **300mm=47>50cm**
3. **350mm=53>61cm**

DISC BRAKE SYSTEM

- Thru axle 12mm front 100mm and rear OLD 142mm specific dimension model QR50 with alloy lever (M12 x P1.5)
- Compatible with 140mm and 160mm rotor

ARIA DISC - ULTEGRA DI2 11SP COMPACT

CODE	YPB38
COLOR	1D - CK16/Black Full Glossy
FRAME	Aria Disc carbon, mechanical/electronic shifting compatible, PressFit 86,5x41mm BB, head tube 1.4"-1.1/8", integrated seat clamp, full carbon dropout, flat mount, thru axle 12x142mm, sizes 44-47-50-53-55-57-59-61cm
SEATPOST CLAMP	included in the frame
HEADSET	Fsa Orbit C-33, NO.44E, 1.1/8"›1.14", 45°/45° ACB steeel bearings, w/15mm top cap for 47mm/52mm OD head tube
FORK	Bianchi Full Carbon 1.4"›1.1/8" integrated head, Disc brake flat mount, thru axle 12x100mm
SHIFTER	Shimano Ultegra Di2 ST-R8070 2x11sp
REAR DERAILLEUR	Shimano Ultegra Di2 RD-R8050 SS 11sp, top normal Shadow Design, direct attachment, Max 30T
FRONT DERAILLEUR	Shimano Ultegra Di2 FD-R8050, brazed-on type
ELECTRIC CABLE	Shimano Junction-A SM-EW90-A, Dura-Ace Di2, E-Tube port X3, charging port X1
BATTERY / MOUNT	Shimano Battery BT-DN110-1
CHARGER / PWR CABLE	Shimano Battery charger SM-BCR2, including charging cord for usb
CRANKSET	Shimano Ultegra FC-R8000 52x36T, Crank Length: 165mm-44cm, 170mm-47/53cm, 172.5mm-55/59cm, 175mm-61cm
BOTTOM BRACKET	Shimano SM-BB72-41B, PressFit
CHAIN	Kmc X11-1 EPT finish, 11sp

CASSETTE / FREEWHEEL	Shimano Ultegra CS-R8000, 11-12-13-14-15-17-19-21-24-27-30T
BRAKE	Shimano BR-R8070 Hydraulic disc brake, flat mount calipers
BRAKE LEVER	included w/shifters
DISC ROTOR	Shimano SM-RT800 Center Lock, diam. 160mm
RIM/WHEELSET	Fulcrum Racing 618 disc brake, R600 aluminium asymetric 622x17c, profile 26mm, thru axle front 12x100mm, rear 12x142mm, Center Lock AFS
TIRE	Vittoria Rubino IV 700x28, 60TPI, Folding, G2.0Graphene, black
STEM	Reparto Corse 3D Forged alloy 6061, rise -8°, 1.1/8", Ext: 70mm-44cm, 90mm-47/50cm, 100mm-53cm, 110mm-55/57cm, 120mm-59cm, 130mm-61cm
HANDLEBAR	Reparto Corse Aero Compact, alloy 6061 diam. 31,8mm, reach 74mm, drop 116mm, Size: 400mm-44/53cm, 420mm-55/59cm, 440mm-61cm
GRIP / TAPE	La Spirale Ribbon cork w/carbon look plugs w/Bianchi logo
SEATPOST	Aria Full Carbon Aero, clamp with alloy head adjustable and reversible +/- 35mm; length: 250mm-44cm, 300mm-47/50cm, 350mm-53/61cm
SADDLE	Selle Royal Seta S1, steel rails, 278x144mm
BOTTLE CAGE	Elite Paron Race composit
WATER BOTTLE	Bianchi Loli 600ml

ARIA DISC - ULTEGRA 11SP COMPACT

CODE	YPB9D
COLOR	1D - CK16/Black Full Glossy, A3 - Black/CK16-Dark Grey full matt
FRAME	Aria Disc carbon, mechanical/electronic shifting compatible, PressFit 86,5x41mm BB, head tube 1.4"-1.1/8", integrated seat clamp, full carbon dropout, flat mount, thru axle 12x142mm, sizes 44-47-50-53-55-57-59-61cm
SEATPOST CLAMP	included in the frame
HEADSET	Fsa Orbit C-33, NO.44E, 1.1/8"›1.14", 45°/45° ACB steeel bearings, w/15mm top cap for 47mm/52mm OD head tube
FORK	Bianchi Full Carbon 1.4"›1.1/8" integrated head, Disc brake flat mount, thru axle 12x100mm
SHIFTER	Shimano Ultegra ST-R8020 2x11sp with Ultegra ST-R8025 smaller lever size for sizes 44/53cm
REAR DERAILLEUR	Shimano Ultegra RD-R8000 SS 11sp, top normal shadow design, direct attachment, Max 25-30T for double
FRONT DERAILLEUR	Shimano Ultegra FD-R8000, down swing, brazed-on type, 61-66°, max chainring 46/53T, CL: 43,5mm
CRANKSET	Shimano Ultegra FC-R8000 52x36T, Crank Length: 165mm-44cm, 170mm-47/53cm, 172.5mm-55/59cm, 175mm-61cm
BOTTOM BRACKET	Shimano SM-BB72-41B, PressFit
CHAIN	Kmc X11-1 EPT finish, 11sp
CASSETTE / FREEWHEEL	Shimano 105 CS-R7000 11sp, 11-12-13-14-15-17-19-21-24-27-30T
BRAKE	Shimano BR-R8070 Hydraulic disc brake, flat mount calipers
BRAKE LEVER	included w/shifters

DISC ROTOR	Shimano SM-RT800 Center Lock, diam. 160mm
RIM/WHEELSET	Fulcrum Racing 618 disc brake, R600 aluminium asymetric 622x17c, profile 26mm, thru axle front 12x100mm, rear 12x142mm, Center Lock AFS
TIRE	Vittoria Rubino IV 700x28, 60TPI, Folding, G2.0Graphene, black
STEM	Reparto Corse 3D Forged alloy 6061, rise -8°, 1.1/8", Ext: 70mm-44cm, 90mm-47/50cm, 100mm-53cm, 110mm-55/57cm, 120mm-59cm, 130mm-61cm
HANDLEBAR	Reparto Corse Aero Compact, alloy 6061 diam. 31,8mm, reach 74mm, drop 116mm, Size: 400mm-44/53cm, 420mm-55/59cm, 440mm-61cm
GRIP / TAPE	La Spirale Ribbon cork w/carbon look plugs w/Bianchi logo
SEATPOST	Aria Full Carbon Aero, clamp with alloy head adjustable and reversible +/- 35mm; length: 250mm-44cm, 300mm-47/50cm, 350mm-53/61cm
SADDLE	Selle Royal Seta S1, steel rails, 278x144mm
BOTTLE CAGE	Elite Paron Race composit
WATER BOTTLE	Bianchi Loli 600ml

ARIA DISC - 105 11SP 52/36

CODE	YPB8D
COLOR	1D - CK16/Black Full Glossy, A3 - Black/CK16/Dark Grey Full Matt
FRAME	Aria Disc carbon, mechanical/electronic shifting compatible, PressFit 86,5x41mm BB, head tube 1.4"-1.1/8", integrated seat clamp, full carbon dropout, flat mount, thru axle 12x142mm, sizes 44-47-50-53-55-57-59-61cm
SEATPOST CLAMP	included in the frame
HEADSET	Fsa Orbit C-33, NO.44E, 1.1/8"›1.14", 45°/45° ACB steeel bearings, w/15mm top cap for 47mm/52mm OD head tube
FORK	Bianchi Full Carbon 1.4"›1.1/8" integrated head, Disc brake flat mount, thru axle 12x100mm
SHIFTER	Shimano 105 ST-R7020 2x11sp, Hydraulic discbrake, Shimano 105 ST-R7025 2x11sp smaller leversize for sizes 44/53cm
REAR DERAILLEUR	Shimano 105 RD-R7000 SS 11sp, top normal Shadow Design, direct attachment
FRONT DERAILLEUR	Shimano 105 FD-R7000-L, down-swing, brazed ontype, 61-66°, for 46/53T CL 43.5mm
CRANKSET	Shimano 105 FC-R7000 52x36T, Hollowtech II, Crank Length: 165mm-44cm, 170mm-47/53cm, 172.5mm-55/59cm, 175mm-61cm
BOTTOM BRACKET	Shimano SM-BB72-41B, PressFit
CHAIN	Kmc X11-1 EPT finish, 11sp
CASSETTE / FREEWHEEL	Shimano 105 CS-R7000 11sp, 11-12-13-14-15-17-19-21-24-27-30T
BRAKE	Shimano BR-RS505, flat mount, hydraulic disc brake
BRAKE LEVER	included w/shifters

DISC ROTOR	Shimano SM-RT70, Center Lock, with Ice Technology, diam. 160mm
RIM/WHEELSET	Fulcrum Racing 618 disc brake, R600 aluminium asymetric 622x17c, profile 26mm, thru axle front 12x100mm, rear 12x142mm, Center Lock AFS
TIRE	Vittoria Zaffiro Pro Slick 700x28, 60TPI, Folding, black
STEM	Reparto Corse 3D Forged alloy 6061, rise -8°, 1.1/8", Ext: 70mm-44cm, 90mm-47/50cm, 100mm-53cm, 110mm-55/57cm, 120mm-59cm, 130mm-61cm
HANDLEBAR	Reparto Corse Aero Compact, alloy 6061 diam. 31,8mm, reach 74mm, drop 116mm, Size: 400mm-44/53cm, 420mm-55/59cm, 440mm-61cm
GRIP / TAPE	La Spirale Ribbon cork w/carbon look plug w/Bianchi logo
SEATPOST	Aria Full Carbon Aero, clamp with alloy head adjustable and reversible +/- 35mm; length: 250mm-44cm, 300mm-47/50cm, 350mm-53/61cm
SADDLE	Selle Royal Seta S1, steel rails, 278x144mm
BOTTLE CAGE	Elite Paron Race composit
WATER BOTTLE	Bianchi Loli 600ml

ARIA

POSITIONING
Aerodynamic bike with aero racing shape frame/fork/ seatpost. Fast road bike with aero tubes profiles, rigidity and handling you would expect from a true racing bike with affordable price.

COURSE/TERRAIN
Road, flat and downhill segments, hilly and fast courses.

END USE DESTINATION
All-round riders with a true racing soul.
Ideal for race warriors and triathlon events.

KEY FEATURES
- Aero shape frame with integrated fork
- Full carbon aero seatpost
- Tapered headtube 1.1/8" to 1 1/4"
- New seatpost aero with integrated look and adjustable head clamp offset 20mm
- BBset 86.5 x 41 - Internal cable routing
- Double compatibility mechanic and electronic groupset
- Carbon dropout with metal insert
- 8 sizes: 44, 47, 50, 53, 55, 57, 59, 61cm
- Weight in 55 size: 1.100g (+/- 5%)
- Best performance-to-price ratio

LIGHTWEIGHT ●●●●●●○○○○
DESIGN ●●●●●●●●●○
COMFORT ●●●●●●○○○○
PERFORMANCE ●●●●●●●●○○

GEOMETRY - RACING

MIS-SLP

A1	AS	B1	BS	C	D	E	F	G	G1	Y	X
440	420	505	495	410	58	95	575	75°	70.5°	481	376
470	440	515	505	410	58	105	581	74.5°	70.5°	490	379
500	470	525	519	410	58	110	582	74.5°	71.5°	499	387
530	500	535	528	410	68	125	583	74°	72°	525	385
550	520	550	541	410	68	140	588	73.5°	72.5°	541	390
570	540	560	553	410	68	155	593	73.5°	73°	557	395
590	560	575	567	412	68	175	603	73°	73°	576	397
610	580	585	576	414	68	195	607	72.5°	73°	595	398

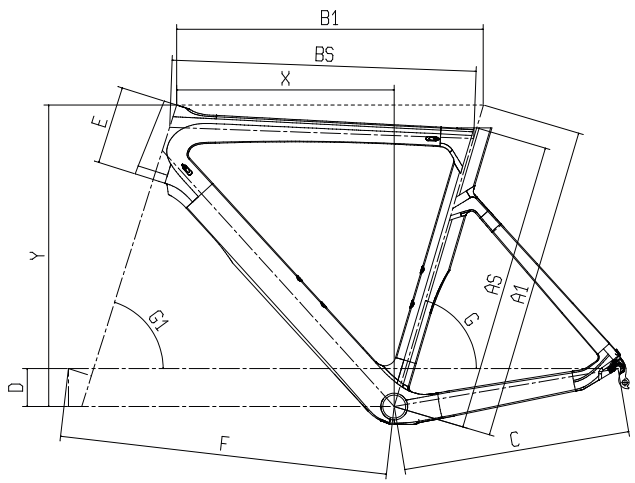

ARIA - ULTEGRA 11SP COMPACT

CODE	YPB47
COLOR	1D - CK16/Black Full Glossy, A1 - Black/Silver-Chrome Full Glossy
FRAME	Aria carbon, mechanical/electronic shifting compatible, PressFit 86,5x41mm BB, head tube 1.4"-1.1/8", integrated seat clamp, full carbon dropout, sizes 44-47-50-53-55-57-59-61cm
SEATPOST CLAMP	included in the frame
HEADSET	Fsa Orbit C-33, NO.44E, 1.1/8"›1.14", 45°/45° ACB steeel bearings, w/15mm top cap for 47mm/52mm OD head tube
FORK	Bianchi Full Carbon Aero 1.4"›1.1/8", integrated head
SHIFTER	Shimano Ultegra ST-R8000 2x11sp
REAR DERAILLEUR	Shimano Ultegra RD-R8000 SS 11sp, top normal Shadow Design, direct attachment, Max 25-30T for double
FRONT DERAILLEUR	Shimano Ultegra FD-R8000, down swing, brazed-on type, 61-66°, max chainring 46/53T, CL: 43,5mm
CRANKSET	Shimano Ultegra FC-R8000 52x36T, Crank Length: 165mm-44cm, 170mm-47/53cm, 172.5mm-55/59cm, 175mm-61cm
BOTTOM BRACKET	Shimano SM-BB72-41B, PressFit
CHAIN	Kmc X11-1 EPT finish, 11sp
CASSETTE / FREEWHEEL	Shimano 105 CS-R7000 11sp, 11-12-13-14-15-17-19-21-24-27-30T
BRAKE	Shimano Ultegra BR-R8000, w/shoe R55C4
BRAKE LEVER	included w/shifters
RIM/WHEELSET	Vision Team 35 Comp, Alloy 35 mm profile clincher rims

TIRE	Vittoria Zaffiro Pro Slick 700x25c, 60TPI, Folding, black
STEM	Reparto Corse 3D Forged alloy 6061, rise -8°, 1.1/8", Ext: 70mm-44cm, 90mm-47/50cm, 100mm-53cm, 110mm-55/57cm, 120mm-59cm, 130mm-61cm
HANDLEBAR	Reparto Corse Aero Compact, alloy 6061 diam. 31,8mm, reach 74mm, drop 116mm, Size: 400mm-44/53cm, 420mm-55/59cm, 440mm-61cm
GRIP / TAPE	La Spirale Ribbon cork w/carbon look plugs w/Bianchi logo
SEATPOST	Aria Full Carbon Aero, clamp with alloy head adjustable and reversible +/- 35mm; length: 250mm-44cm, 300mm-47/50cm, 350mm-53/61cm
SADDLE	Selle Royal Seta S1, steel rails, 278x144mm
BOTTLE CAGE	Elite Paron Race composit
WATER BOTTLE	Bianchi Loli 600ml

ARIA - 105 11SP 52/36

CODE	YPB46
COLOR	1D - CK16/Black Full Glossy, A3 - Black/CK16/Dark Grey Full Matt
FRAME	Aria carbon, mechanical/electronic shifting compatible, PressFit 86,5x41mm BB, head tube 1.4"-1.1/8", integrated seat clamp, full carbon dropout, sizes 44-47-50-53-55-57-59-61cm
SEATPOST CLAMP	included in the frame
HEADSET	Fsa Orbit C-33, NO.44E, 1.1/8"›1.14", 45°/45° ACB steeel bearings, w/15mm top cap for 47mm/52mm OD head tube
FORK	Bianchi Full Carbon Aero 1.4"›1.1/8", integrated head
SHIFTER	Shimano 105 ST-R7000 2x11sp
REAR DERAILLEUR	Shimano 105 RD-R7000 SS 11sp, top normal Shadow Design, direct attachment
FRONT DERAILLEUR	Shimano 105 FD-R7000-L, down-swing, brazed ontype, 61-66°, for 46/53T CL 43.5mm
CRANKSET	Shimano 105 FC-R7000 52x36T, Hollowtech II, Crank Length: 165mm-44cm, 170mm-47/53cm, 172.5mm-55/59cm, 175mm-61cm
BOTTOM BRACKET	Shimano SM-BB72-41B, PressFit
CHAIN	Kmc X11-1 EPT finish, 11sp
CASSETTE / FREEWHEEL	Shimano 105 CS-R7000 11sp, 11-12-13-14-15-17-19-21-24-27-30T
BRAKE	Shimano 105 BR-R7000, w/R55C4 pads
BRAKE LEVER	included w/shifters
RIM/WHEELSET	Vision Team 35 Comp, Alloy 35 mm profile clincher rims
TIRE	Vittoria Zaffiro Pro Slick 700x25c, 60TPI, Folding, black

STEM	Reparto Corse Alloy 6061, rise +/-7°, 1.1/8", Ext: 70mm-44cm, 90mm-47/50cm, 100mm-53cm, 110mm-55/57cm, 120mm-59cm, 130mm-61/63cm
HANDLEBAR	Reparto Corse Aero Compact, alloy 6061 diam. 31,8mm, reach 74mm, drop 116mm, Size: 400mm-44/53cm, 420mm-55/59cm, 440mm-61cm
GRIP / TAPE	La Spirale Ribbon cork w/carbon look plugs w/Bianchi logo
SEATPOST	Aria Full Carbon Aero, clamp with alloy head adjustable and reversible +/- 35mm; length: 250mm-44cm, 300mm-47/50cm, 350mm-53/61cm
SADDLE	Selle Royal Seta S1, steel rails, 278x144mm
BOTTLE CAGE	Elite Paron Race composit
WATER BOTTLE	Bianchi Loli 600ml

SPRINT DISC

POSITIONING
The Sprint is worthy of inclusion in Bianchi's Racing category, created for those star-ting out on their journey in competition. Launched in the 1970s, the original Sprint was loved by riders of the time, and is much ad-mired still as an iconic piece of cycling's history.

COURSE/TERRAIN
Road and hilly courses with climbs and long descents.

END USE DESTINATION
A racing carbon bike for those new to the world of competitive road cycling.

KEY FEATURES
- Full carbon monocoque frame and fork
- Racing geometry, UCI Approved
- Electronic and mechanical shifting compatible
- Head tube with aero profile
- Internal cable routing
- Tapered head Tube 1.1/8"-1.4"
- PressFit 86.4x41mm BB
- Full carbon dropouts with metal inserts
- Braze on FD
- Integrated Seatpost clamp
- 27.2mm round seatpost
- Flat mount calipers & thru axle 12x 100/142mm
- 7 Sizes: 47-50-53-55-57-59-61cm
- Weight: 1.100g
- Tire size: up to 700x32

LIGHTWEIGHT ●●●●●●○○○○
DESIGN ●●●●●●●○○○
COMFORT ●●●●●●●○○○
PERFORMANCE ●●●●●●●●○○

GEOMETRY - RACING

MIS-SLP

A1	A	B1	C	D	E	F	G	G1	H	I	X	Y	WB
470	420	515	410	60	105	580	74,5°	70.5°	43	373	377	497	982
500	450	525	410	60	110	582	74.5°	71.5°	43	373	383	505	983
530	480	535	410	68	125	583	74°	72°	43	373	384	529	984
550	500	550	413	68	140	588	73.5°	73°	43	373	388	545	991
570	520	560	413	68	155	593	73.5°	73°	43	373	393	561	996
590	540	575	413	68	175	603	73°	73°	43	373	396	580	1006
610	560	585	413	68	195	607	72.5°	73°	43	373	397	599	1012

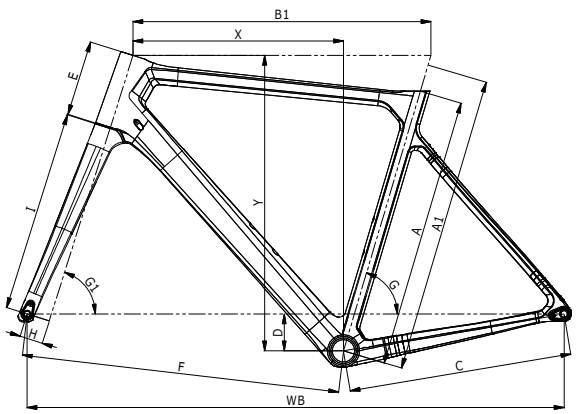

FULL CARBON FORK

The carbon fork delivers low weight for graceful climbing and agile handling in the turns.

PARED BACK AESTHETICS

The chain stays, fork blades, top tube and down tube feature a subtle recurring graphic of the Bianchi logo. It comes in two color versions: celeste and black.

CLEARANCE

Sprint frame is compatible with larger volume tires to enhances comfort and grip wi-thout affecting rolling efficiency or speed. Disc version can accommodate tires up to 700x32 while caliper model is compatible with 700x28 tires.

SPRINT DISC - FORCE ETAP AXS 12SP

CODE	YPBR8
COLOR	1D - CK16 full glossy
FRAME	Sprint Disc carbon monocoque, mechanical/electronic shifting compatible, PressFit 86,5x41mm,head tube 1.4"-1.1/8", integrated seat clamp,full carbon dropout, flat mount caliper, thru axle12x142mm, 32mm tires compatible, sizes 47-50-53-55-57-59-61cm
SEATPOST CLAMP	included in the frame
HEADSET	Fsa Orbit C-33, NO.44E, 1.1/8"›1.14", 45°/45° ACB steeel bearings, w/15mm top cap for 47mm/52mm OD head tube
FORK	Bianchi Full Carbon 1.4"›1.1/8" integrated head, Disc brake flat mount, thru axle 12x100mm
SHIFTER	Sram Force eTap AXS D1 2x12sp
REAR DERAILLEUR	Sram Force eTap AXS D1 12sp
FRONT DERAILLEUR	Sram Force eTap AXS D1, brazed on type
BATTERY / MOUNT	Sram eTap EP Powerpack, 2 batteries
CHARGER / PWR CABLE	Sram eTap battery charger
CRANKSET	Sram Force D1 48x35T, crank length: 170mm-47/53cm, 172.5mm-55/59cm, 175mm-61cm
BOTTOM BRACKET	Sram PressFit Road 86,5x41mm
CHAIN	Sram Force D1 12sp
CASSETTE / FREEWHEEL	Sram Force XG-1270 D1 12sp, 10-11-12-13-14-15-17-19-21-24-28-33T

BRAKE	Sram Force HydroHC
BRAKE LEVER	included w/shifters
DISC ROTOR	Sram Centerline Road, diam. 160mm
RIM/WHEELSET	Fulcrum Racing 618 disc brake, R600 aluminium asymetric rims 622x17c, profile 26mm, thru axle front 12x100mm, rear 12x142mm, Center Lock AFS, XDR freewheel body
TIRE	Vittoria Rubino IV 700x28, 60TPI, Folding, G2.0Graphene, black
STEM	Reparto Corse Alloy 6061, rise +/-7°, 1.1/8", Ext: 70mm-44cm, 90mm-47/50cm, 100mm-53cm, 110mm-55/57cm, 120mm-59cm, 130mm-61/63cm
HANDLEBAR	Reparto Corse Compact, Flat Top, alloy 6061 diam.31,8mm, reach 80mm, drop 130mm, Size: 400mm-47/53cm, 420mm-55/59cm, 440mm-61cm
GRIP / TAPE	Cork w/Bianchi logo
SADDLE	Selle Royal Seta S1, steel rails, 278x144mm
BOTTLE CAGE	Alloy black
WATER BOTTLE	Bianchi Loli 600ml

SPRINT DISC - ULTEGRA 11SP COMPACT

CODE	YPBR4
COLOR	1D - CK16 full glossy, 5F - Black/CK16 full glossy
FRAME	Sprint Disc carbon monocoque, mechanical/electronic shifting compatible, PressFit 86,5x41mm,head tube 1.4"-1.1/8", integrated seat clamp,full carbon dropout, flat mount caliper, thru axle12x142mm, 32mm tires compatible, sizes 47-50-53-55-57-59-61cm
SEATPOST CLAMP	included in the frame
HEADSET	Fsa Orbit C-33, NO.44E, 1.1/8"›1.14", 45°/45° ACB steeel bearings, w/15mm top cap for 47mm/52mm OD head tube
FORK	Bianchi Full Carbon 1.4"›1.1/8" integrated head, Disc brake flat mount, thru axle 12x100mm
SHIFTER	Shimano Ultegra ST-R8020 2x11sp, hydraulic discbrake, Shimano Ultegra ST-R8025 2x11sp, smallerlever size for sizes 47/53cm
REAR DERAILLEUR	Shimano Ultegra RD-R8000 GS 11sp, top normal shadow design, direct attachment, compatible with low gear 28-34T
FRONT DERAILLEUR	Shimano Ultegra FD-R8000, down swing, brazed-on type, 61-66°, max chainring 46/53T, CL: 43,5mm
CRANKSET	Shimano Ultegra FC-R8000 52x36T, Crank Length: 165mm-44cm, 170mm-47/53cm, 172.5mm-55/59cm, 175mm-61cm
BOTTOM BRACKET	Shimano SM-BB71-41B, PressFit
CHAIN	Kmc X11-1 EPT finish, 11sp
CASSETTE / FREEWHEEL	Shimano 105 CS-R7000, 11-12-13-14-16-18-20-22-25-28-32T
BRAKE	Shimano BR-R8070 Hydraulic disc brake, flat mount calipers

BRAKE LEVER	included w/shifters
DISC ROTOR	Shimano SM-RT70, Center Lock, with Ice Technology, diam. 160mm
RIM/WHEELSET	Shimano WH-RS171 w/E-THRU F: 12x110mm, R:12x142mm, clincher 622x19C, Center Lock
TIRE	Vittoria Rubino IV 700x28, 60TPI, Folding, G2.0Graphene, black
STEM	Reparto Corse Alloy 6061, rise +/-7°, 1.1/8", Ext: 70mm-44cm, 90mm-47/50cm, 100mm-53cm, 110mm-55/57cm, 120mm-59cm, 130mm-61/63cm
HANDLEBAR	Reparto Corse Compact, Flat Top, alloy 6061 diam.31,8mm, reach 80mm, drop 130mm, Size: 400mm-47/53cm, 420mm-55/59cm, 440mm-61cm
GRIP / TAPE	Cork w/Bianchi logo
SEATPOST	Reparto Corse Alloy 6061 shaft, alloy head, 15mmoffset, diam. 27.2mm, Length 350mm
SADDLE	Selle Royal SR 2302 HRN, w/hole, steel rail, PUsoft touch cover, 280x145mm
BOTTLE CAGE	Alloy black
WATER BOTTLE	Bianchi Loli 600ml

SPRINT DISC - 105 11SP COMPACT

CODE	YPBR5
COLOR	1D - CK16 full glossy
FRAME	Sprint Disc carbon monocoque, mechanical/electronic shifting compatible, PressFit 86,5x41mm,head tube 1.4"-1.1/8", integrated seat clamp,full carbon dropout, flat mount caliper, thru axle12x142mm, 32mm tires compatible, sizes 47-50-53-55-57-59-61cm
SEATPOST CLAMP	included in the frame
HEADSET	Fsa Orbit C-33, NO.44E, 1.1/8"›1.14", 45°/45° ACB steeel bearings, w/15mm top cap for 47mm/52mm OD head tube
FORK	Bianchi Full Carbon 1.4"›1.1/8" integrated head, Disc brake flat mount, thru axle 12x100mm
SHIFTER	Shimano 105 ST-R7020 2x11sp, Hydraulic discbrake, Shimano 105 ST-R7025 2x11sp smaller leversize for sizes 47-50-53cm
REAR DERAILLEUR	Shimano 105 RD-R7000 GS 11sp, top normalshadow design, direct attachment
FRONT DERAILLEUR	Shimano 105 FD-R7000-L, down-swing, brazed ontype, 61-66°, for 46/53T CL 43.5mm
CRANKSET	Shimano 105 FC-R7000 50x34T, HollowtechII, crank length: 170mm-47/53cm, 172.5mm-55/59cm, 175mm-61cm
BOTTOM BRACKET	Shimano SM-BB71-41B, PressFit
CHAIN	Kmc X11-1 EPT finish, 11sp
CASSETTE / FREEWHEEL	Shimano 105 CS-R7000, 11-12-13-14-16-18-20-22-25-28-32T
BRAKE	Shimano 105 BR-R7070, hydraulic disc brake, flatmount calipers

BRAKE LEVER	included w/shifters
DISC ROTOR	Shimano SM-RT70, Center Lock, with Ice Technology, diam. 160mm
RIM/WHEELSET	Shimano WH-RS171 w/E-THRU F: 12x110mm, R:12x142mm, clincher 622x19C, Center Lock
TIRE	Vittoria Rubino IV 700x28, 60TPI, Folding, G2.0Graphene, black
STEM	Reparto Corse Alloy 6061, rise +/-7°, 1.1/8", Ext: 70mm-44cm, 90mm-47/50cm, 100mm-53cm, 110mm-55/57cm, 120mm-59cm, 130mm-61/63cm
HANDLEBAR	Reparto Corse Compact, Flat Top, alloy 6061 diam.31,8mm, reach 80mm, drop 130mm, Size: 400mm-47/53cm, 420mm-55/59cm, 440mm-61cm
GRIP / TAPE	La Spirale Ribbon cork w/carbon look plugs w/Bianchi logo
SEATPOST	Reparto Corse Alloy 6061 shaft, alloy head, 15mmoffset, diam. 27.2mm, Length 350mm
SADDLE	Selle Royal SR 2302 HRN, w/hole, steel rail, PUsoft touch cover, 280x145mm
BOTTLE CAGE	Alloy black
WATER BOTTLE	Bianchi Loli 600ml

SPRINT

POSITIONING
The Sprint is worthy of inclusion in Bianchi's Racing category, created for those star-ting out on their journey in competition. Launched in the 1970s, the original Sprint was loved by riders of the time, and is much ad-mired still as an iconic piece of cycling's history.

COURSE/TERRAIN
Road and hilly courses.

END USE DESTINATION
A racing carbon bike for those new to the world of competitive road cycling.

KEY FEATURES
- Full carbon monocoque frame and fork
- Racing geometry, UCI Approved
- Electronic and mechanical shifting compatible
- Head tube with aero profile
- Internal cable routing
- Tapered head Tube 1.1/8"-1.4"
- PressFit 86.4x41mm BB
- Full carbon dropouts with metal inserts
- Braze on FD
- Integrated Seatpost clamp
- 27.2mm round seatpost
- 8 Sizes: 44-47-50-53-55-57-59-61cm
- Weight: 1.080g
- Tire size: up to 700x28

LIGHTWEIGHT ●●●●●●○○○○
DESIGN ●●●●●●●○○○
COMFORT ●●●●●●●○○○
PERFORMANCE ●●●●●●●●○○

GEOMETRY - RACING

MIS-SLP

A1	A	B1	C	D	E	F	G	G1	H	I	X	Y	WB
440	390	505	405	60	95	574	74.5°	70°	43	373	370	486	971
470	420	515	405	60	105	580	74.5°	70.5°	43	373	377	497	978
500	450	525	405	60	110	582	74.5°	71.5°	43	373	383	505	979
530	480	535	406	68	125	583	74°	72°	43	373	384	529	980
550	500	550	407	68	140	588	73.5°	73°	43	373	388	545	985
570	520	560	407	68	155	593	73.5°	73°	43	373	393	561	990
590	540	575	409	68	175	603	73°	73°	43	373	396	580	1002
610	560	585	411	68	195	607	72.5°	73°	43	373	397	599	1009

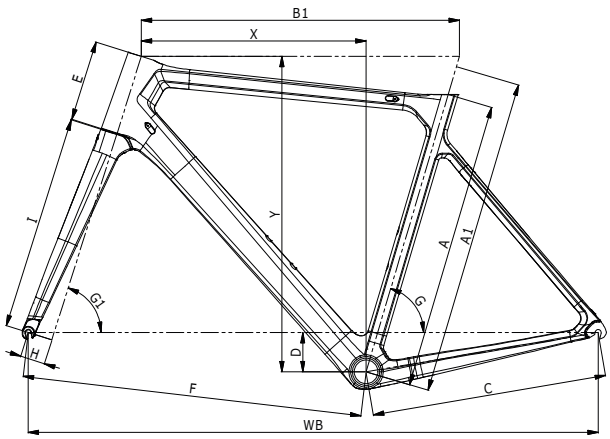

SPRINT - ULTEGRA 11SP COMPACT

CODE	YPBR2
COLOR	1D - CK16 full glossy, 5F - Black/CK16 full glossy
FRAME	Sprint carbon monocoque, PressFit 86.5x41mm,mechanical and electronic shifting compatible,28mm tires compatible, sizes 44-47-50-53-55-57-59-61cm
SEATPOST CLAMP	Included in the frame
HEADSET	Fsa Orbit C-33, NO.44E, 1.1/8"›1.14", 45°/45° ACB steeel bearings, w/15mm top cap for 47mm/52mm OD head tube
FORK	Bianchi Full Carbon 1.4"›1.1/8", 28mm tirescompatible
SHIFTER	Shimano Ultegra ST-R8000 2x11sp
REAR DERAILLEUR	Shimano Ultegra RD-R8000 GS 11sp, top normal shadow design, direct attachment, compatible with low gear 28-34T
FRONT DERAILLEUR	Shimano Ultegra FD-R8000, down swing, brazed-on type, 61-66°, max chainring 46/53T, CL: 43,5mm
CRANKSET	Shimano FC-RS510 50x34T, cranklength: 165mm-44cm, 170mm-47/53cm,172.5mm-55/59cm, 175mm-61cm
BOTTOM BRACKET	Shimano SM-BB71-41B, PressFit
CHAIN	Kmc X11-1 EPT finish, 11sp
CASSETTE / FREEWHEEL	Shimano 105 CS-R7000, 11-12-13-14-16-18-20-22-25-28-32T
BRAKE	Shimano BR-R561-L, shoes R55CT4, black
BRAKE LEVER	included w/shifters
RIM/WHEELSET	Shimano WH-RS100
TIRE	Vittoria Zaffiro Pro Slick 700x25c, 60TPI, Folding, black

STEM	Reparto Corse Alloy 6061, rise +/-7°, 1.1/8", Ext: 70mm-44cm, 90mm-47/50cm, 100mm-53cm, 110mm-55/57cm, 120mm-59cm, 130mm-61/63cm
HANDLEBAR	Reparto Corse Compact, Flat Top, Alloy 6061,diam. 31.8mm, reach 80mm, drop 130mm, Size:400mm-44/53cm, 420mm-55/59cm, 440mm-61cm
GRIP / TAPE	La Spirale Bike Ribbon Eolo soft w/carbon look plug w/ Bianchi logo
SEATPOST	Reparto Corse Alloy 6061 shaft, alloy head, 15mmoffset, diam 27.2mm, Length: 300mm-44cm,350mm-47/61cm
SADDLE	Selle Royal SR 2302 HRN, w/hole, steel rail, PUsoft touch cover, 280x145mm
BOTTLE CAGE	Alloy black
WATER BOTTLE	Bianchi Loli 600ml

SPRINT - 105 11SP COMPACT

CODE	YPBR3
COLOR	1D - CK16 full glossy
FRAME	Sprint carbon monocoque, PressFit 86.5x41mm,mechanical and electronic shifting compatible,28mm tires compatible, sizes 44-47-50-53-55-57-59-61cm
SEATPOST CLAMP	Included in the frame
HEADSET	Fsa Orbit C-33, NO.44E, 1.1/8"›1.14", 45°/45° ACB steeel bearings, w/15mm top cap for 47mm/52mm OD head tube
FORK	Bianchi Full Carbon 1.4"›1.1/8", 28mm tirescompatible
SHIFTER	Shimano 105 ST-R7000 2x11sp
REAR DERAILLEUR	Shimano 105 RD-R7000 GS 11sp, top normalshadow design, direct attachment
FRONT DERAILLEUR	Shimano 105 FD-R7000-L, down-swing, brazed ontype, 61-66°, for 46/53T CL 43.5mm
CRANKSET	Shimano FC-RS510 50x34T, cranklength: 165mm-44cm, 170mm-44/53cm,172.5mm-55/59cm, 175mm-61cm
BOTTOM BRACKET	Shimano SM-BB71-41B, PressFit
CHAIN	Kmc X11-1 EPT finish, 11sp
CASSETTE / FREEWHEEL	Shimano 105 CS-R7000, 11-12-13-14-16-18-20-22-25-28-32T
BRAKE	Shimano BR-R561-L, shoes R55CT4, black
BRAKE LEVER	included w/shifters
RIM/WHEELSET	Shimano WH-RS100
TIRE	Vittoria Zaffiro Pro Slick 700x25c, 60TPI, Folding, black
STEM	Reparto Corse Alloy 6061, rise +/-7°, 1.1/8", Ext: 70mm-44cm, 90mm-47/50cm, 100mm-53cm, 110mm-55/57cm, 120mm-59cm, 130mm-61/63cm

HANDLEBAR	Reparto Corse Compact, Flat Top, Alloy 6061,diam. 31.8mm, reach 80mm, drop 130mm, Size:400mm-44/53cm, 420mm-55/59cm, 440mm-61cm
GRIP / TAPE	La Spirale Bike Ribbon Eolo soft w/carbon look plug w/ Bianchi logo
SEATPOST	Reparto Corse Alloy 6061 shaft, alloy head, 15mmoffset, diam 27.2mm, Length: 300mm-44cm,350mm-47/61cm
SADDLE	Selle Royal SR 2302 HRN, w/hole, steel rail, PUsoft touch cover, 280x145mm
BOTTLE CAGE	Alloy black
WATER BOTTLE	Bianchi Loli 600ml

Bianchi
Bianchi

ENDURANCE

INFINITO CV
INFINITO XE
VIA NIRONE 7

INFINITO CV DISC

POSITIONING
The best high-end endurance road disc bike.
Infinito CV provides less muscle fatigue and more control thanks to the specific tuning process of the Bianchi CV system.

COURSE/TERRAIN
Road, rough surfaces, cobblestone sections, extreme braking conditions.

END USE DESTINATION
Pro riders, cobblestones specialists in particular. Ideal for granfondo and marathon riders. Perfect for those who love to spend long hours on the saddle.

KEY FEATURES
- Countervail material
- Endurance geometry
- Higher headtube and longer chainstay
- Disc brake system with thru axle (140 o 160mm)
- 32mm tubular/clincher compatible
- Vision Metron 5D handlebar compatible
- 7 Sizes: 47-50-53-55-57-59-61cm

LIGHTWEIGHT ●●●●●●●●○○
DESIGN ●●●●●●●●●●
COMFORT ●●●●●●●●●●
PERFORMANCE ●●●●●●●●●○

GEOMETRY - ENDURANCE

MIS-SLP

A1	A	B1	C	D	E	F	G	G1	H	I	X	Y	WB
470	420	515	415	68	120	581	74.5°	70.5°	43	375	370	521	966
500	450	525	415	68	135	583	74.5°	71.5°	43	375	375	539	988
530	480	535	415	68	150	588	74°	71.5°	43	375	376	553	993
550	500	550	415	68	165	593	73.5°	72°	43	375	381	569	999
570	520	560	415	68	180	599	73.5°	72.5°	43	375	386	585	1004
590	540	575	420	68	195	608	73°	72.5°	43	375	392	599	1018
610	560	585	420	68	210	612	72.5°	72.5°	43	375	392	614	1023

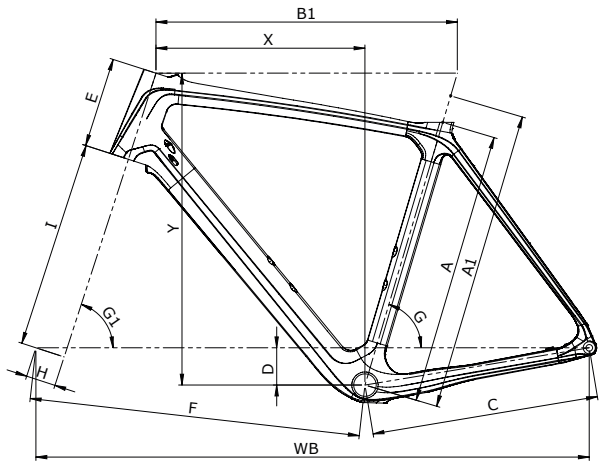

NEW FRAME DESIGN

Longer chainstays help smooth the ride, and a taller aero headtube gives the rider a low-stress neck position

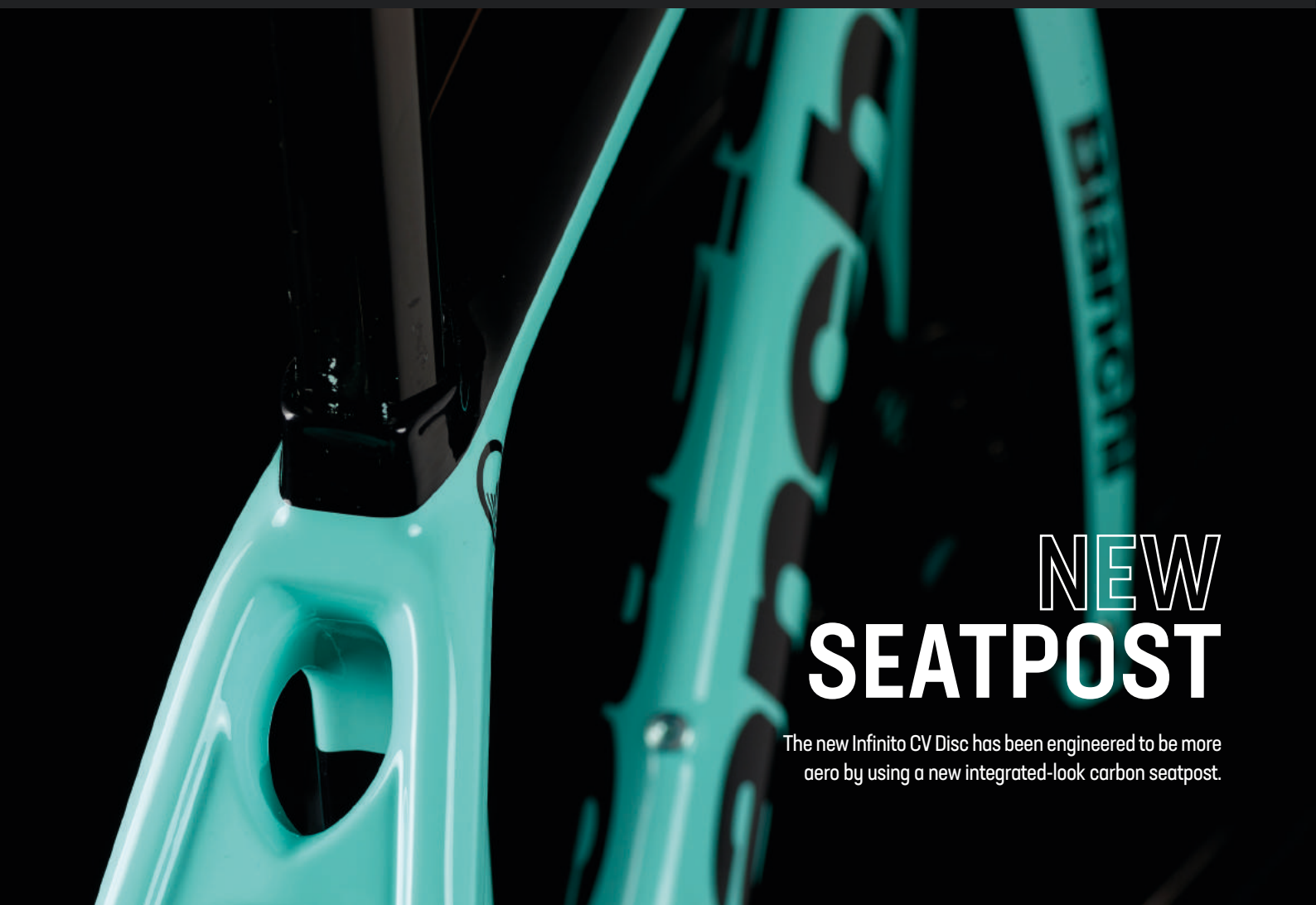

NEW SEATPOST

The new Infinito CV Disc has been engineered to be more aero by using a new integrated-look carbon seatpost.

FORK

The Infinito CV Disc is fitted with a shallow curved blade, aero, full-carbon fork. Featuring a 1.1/8 -1.5in taper steerer and 12x100mm thru-axle drop outs, for steering stability and precision and braking performance. The fork weighs 390g.

INTEGRATED DISC BRAKE MOUNTS

Compatible with 140 or 160mm rotors. Cables for brakes and drivetrain are all internally routed.

LARGER VOLUME TYRES

UP TO 32mm

High-volume tyres add extra grip, comfort and control, without affecting rolling efficiency, or speed.

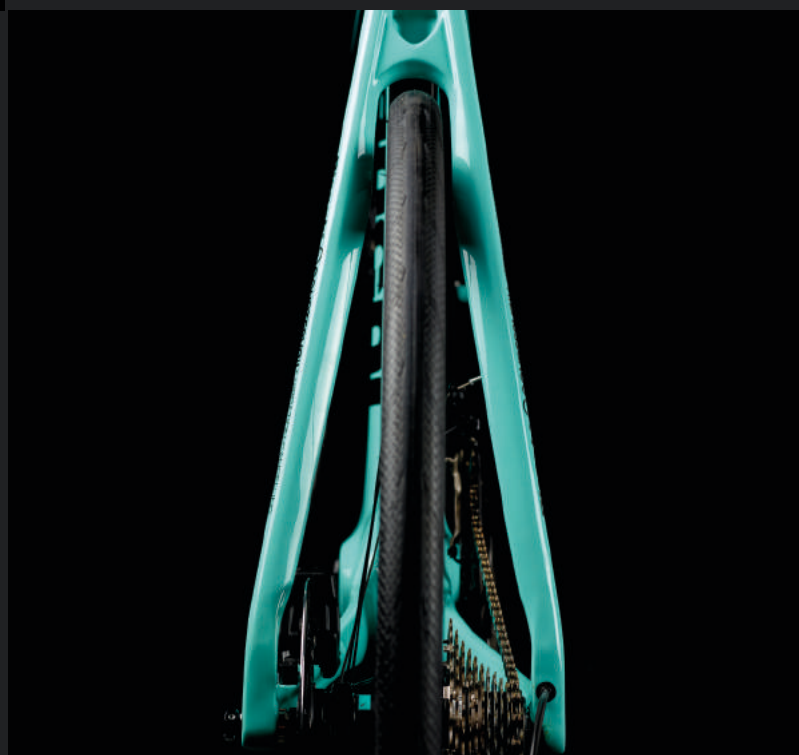

INFINITO CV DISC - RED ETAP AXS 12SP

CODE	YPB26
COLOR	2A - CK16/Black Full Glossy
FRAME	Infinito CV Disc, Carbon w/Countervail, Mechanical/ Electronic Di2/EPS shifting compatible, 32" tire compatible, BBset PressFit 86,5x41mm, thru axle 12x142mm, sizes 47-50-53-55-57-59-61cm
BOLTS / HARDWARE	AL7075-T6 large button head bolts, Torx M5*14mm x 4pcs, Celeste w/Bianchi logo
SEATPOST CLAMP	included in the frame
HEADSET	Fsa Orbit C-40-ACB ; NO.42/47/CF/ACB, Sealed ACB bearings 1.1/8" Top, 1.5" Btm, (for 46/56mm Head Tubes); w/alloy carbon top cap
FORK	Bianchi Full Carbon w/Countervail, Disc, thru axle 12x100mm, Flat Mount caliper, 32" tire compatible
SHIFTER	Sram Red eTap AXS D1 2x12sp
REAR DERAILLEUR	Sram Red eTap AXS D1 12sp
FRONT DERAILLEUR	Sram Red eTap AXS D1, braze on
BATTERY / MOUNT	Sram eTap EP Powerpack, 2 batteries
CHARGER / PWR CABLE	Sram eTap battery charger
CRANKSET	Sram Red D1 12sp 46x33T, crank length: 170mm-47/53cm, 172.5mm-55/59cm, 175mm-61cm
BOTTOM BRACKET	Sram PressFit Road 86,5x41mm
CHAIN	Sram Red D1 12sp
CASSETTE / FREEWHEEL	Sram Red XG-1290 D1 12sp, 10-11-12-13-14-15-16-17-19-21-24-28T

BRAKE	Sram Red eTap AXS HRD HydroC
BRAKE LEVER	included w/shifters
DISC ROTOR	Sram Centerline XR Road, diam. 160mm
RIM/WHEELSET	Fulcrum Racing 418 disc brake, R400 aluminium asymetric rims 622x17c, tubeless ready, profile 34mm, thru axle front 12x100mm, rear 12x142mm, Center Lock AFS
TIRE	Vittoria Rubino Pro G2.0 graphene 700x28, 150TPI, Folding, Black
STEM	Reparto Corse 3D Forged alloy 7050, rise +/-7°, 1.1/8", alloy faceplate, Ext: 70mm-47, 90mm-50cm, 100mm-53cm, 110mm-55cm, 120mm-57/59cm, 130mm-61cm
HANDLEBAR	Reparto corse full carbon, diam. 31.8mm, reach 76mm, drop 120mm, 4∫ outward bend, Size: 400mm-44/50cm, 420mm-53/57cm, 440mm-59/61cm
GRIP / TAPE	Black soft Microfiber tapes w/shockproof Eva-139
SEATPOST	Infinito Full Carbon, clamp with alloy head adjustable and reversible +/- 35mm, length: 350mm-47/57cm, 380mm-59/61cm, Setback 25mm/-10mm
SADDLE	Fi'zi:k Aliante R5 open Large, MicroTex cover, S-Alloy rails, 280x152mm, Integrated Clip System
BOTTLE CAGE	Elite Paron Race composit
WATER BOTTLE	Bianchi Loli 600ml

INFINITO CV DISC - FORCE ETAP AXS 12SP

CODE	YPBN2
COLOR	2A - CK16/Black Full Glossy, 2R - Black/Graphite Full Glossy
FRAME	Infinito CV Disc, Carbon w/Countervail, Mechanical/ Electronic Di2/EPS shifting compatible, 32" tire compatible, BBset PressFit 86,5x41mm, thru axle 12x142mm, sizes 47-50-53-55-57-59-61cm
BOLTS / HARDWARE	AL7075-T6 large button head bolts, Torx M5*14mm x 4pcs, Celeste w/Bianchi logo
SEATPOST CLAMP	included in the frame
HEADSET	Fsa Orbit C-40-ACB; NO.42/47/CF/ACB, Sealed ACB bearings 1.1/8" Top, 1.5" Btm (for 46/56mm Head Tubes), w/alloy carbon top cap
FORK	Bianchi Full Carbon w/Countervail, Disc, thru axle 12x100mm, Flat Mount caliper, 32" tire compatible
SHIFTER	Sram Force eTap AXS D1 2x12sp
REAR DERAILLEUR	Sram Force eTap AXS D1 12sp
FRONT DERAILLEUR	Sram Force eTap AXS D1, brazed on type
BATTERY / MOUNT	Sram eTap EP Powerpack, 2 batteries
CHARGER / PWR CABLE	Sram eTap battery charger
CRANKSET	Sram Force D1 46x33T, crank length: 170mm-47/53cm, 172.5mm-55/59cm, 175mm-61cm
BOTTOM BRACKET	Sram PressFit Road 86,5x41mm
CHAIN	Sram Force D1 12sp
CASSETTE / FREEWHEEL	Sram Force XG-1270 D1 12sp, 10-11-12-13-14-15-17-19-21-24-28-33T
BRAKE	Sram Force HydroHC
BRAKE LEVER	included w/shifters

DISC ROTOR	Sram Centerline Road, diam. 160mm
RIM/WHEELSET	Fulcrum Racing 418 disc brake, R400 aluminium asymetric rims 622x17c, tubeless ready, profile 34mm, thru axle front 12x100mm, rear 12x142mm, Center Lock AFS, XDR freewheel body
TIRE	Vittoria Rubino Pro G2.0 graphene 700x28, 150TPI, Folding, Black
STEM	Reparto Corse 3D Forged alloy 7050, rise +/-7°, 1.1/8", alloy faceplate, Ext: 70mm-47cm, 90mm-50cm, 100mm-53cm, 110mm-55cm, 120mm-57/59cm, 130mm-61cm
HANDLEBAR	Reparto corse full carbon, diam. 31.8mm, reach 76mm, drop 120mm, 4∫ outward bend, Size: 400mm-44/50cm, 420mm-53/57cm, 440mm-59/61cm
GRIP / TAPE	Microfiber tape w/shockproof EVA 139
SEATPOST	Infinito Full Carbon, clamp with alloy head adjustable and reversible +/- 35mm, length: 350mm-47/57cm, 380mm-59/61cm, Setback 25mm/-10mm
SADDLE	Fi'zi:k Aliante R5 open Large, MicroTex cover, S-Alloy rail, 280x152mm, Integrated Clip System
BOTTLE CAGE	Elite Paron Race composit
WATER BOTTLE	Bianchi Loli 600ml

INFINITO CV DISC - DURA ACE DI2 11SP COMPACT

THE IMAGE SHOWN IS INDICATIVE ONLY. Components and graphic details may differ from the actual model.

CODE	YPBN3
COLOR	2R - Black/Graphite Full Glossy
FRAME	Infinito CV Disc, Carbon w/Countervail, Mechanical/ Electronic Di2/EPS shifting compatible, 32" tire compatible, BBset PressFit 86,5x41mm, thru axle 12x142mm, sizes 47-50-53-55-57-59-61cm
BOLTS / HARDWARE	AL7075-T6 large button head bolts, Torx M5*14mm x 4pcs, Celeste w/Bianchi logo
SEATPOST CLAMP	included in the frame
HEADSET	Fsa Orbit C-40-ACB ; NO.42/47/CF/ACB, Sealed ACB bearings 1.1/8" Top, 1.5" Btm (for 46/56mm Head Tubes); w/alloy carbon top cap
FORK	Bianchi Full Carbon w/Countervail, Disc, thru axle 12x100mm, Flat Mount caliper, 32" tire compatible
SHIFTER	Shimano Dura Ace Di2 ST-R9170 2x11sp
REAR DERAILLEUR	Shimano Dura Ace Di2 RD-R9150 SS 11sp, shadow design, direct attachment, Max 30T
FRONT DERAILLEUR	Shimano Dura Ace Di2 FD-R9150-F, braze-on type
ELECTRIC CABLE	Shimano Junction A EW-RS910, handlebar built-in type, w/e-tube port X2, w/charging port X1
BATTERY / MOUNT	Shimano Battery BT-DN110-1
CHARGER / PWR CABLE	Shimano Battery charger SM-BCR2, including charging cord for usb
CRANKSET	Shimano Dura Ace FC-R9100 50x34T, Hollowtech II, crank length: 170mm-47/53cm, 172.5mm-55/59cm, 175mm-61cm
BOTTOM BRACKET	Shimano SM-BB92-41B, PressFit Road
CHAIN	Shimano Dura Ace CN-HG901-11
CASSETTE / FREEWHEEL	Shimano Dura Ace CS-R9100, 11-12-13-14-15-17-19-21-24-27-30T
BRAKE	Shimano BR-R9170 Hydraulic disc brake, flat mount caliper

BRAKE LEVER	included w/shifters
DISC ROTOR	Shimano SM-RT900, diam 160mm, Center Lock
RIM/WHEELSET	Fulcrum Racing 418 disc brake, R400 aluminium asymetric 622x17c, profile 34mm, thru axle front 12x100mm, rear 12x142mm, Center Lock AFS
TIRE	Vittoria Rubino Pro G2.0 graphene 700x28, 150TPI, Folding, Black
STEM	Reparto Corse 3D Forged alloy 7050, rise +/-7°, 1.1/8", alloy faceplate, Ext: 70mm-47cm, 90mm-50cm, 100mm-53cm, 110mm-55cm, 120mm-57/59cm, 130mm-61cm
HANDLEBAR	Reparto corse full carbon, diam. 31.8mm, reach 76mm, drop 120mm, 4∫ outward bend, Size: 400mm-47/50cm, 420mm-53/57cm, 440mm-59/61cm
GRIP / TAPE	Black soft Microfiber tapes w/shockproof Eva-139, size: 200*3cm with 4 line hole and plug
SEATPOST	Infinito Full Carbon, clamp with alloy head adjustable and reversible +/- 35mm, length: 350mm-47/57cm, 380mm-59/61cm, Setback 25mm/-10mm
SADDLE	Fi'zi:k Aliante R5 open Large, MicroTex cover, S-Alloy rail, 280x152mm, Integrated Clip System
BOTTLE CAGE	Elite Paron Race composit
WATER BOTTLE	Bianchi Loli 600ml

INFINITO CV DISC - ULTEGRA DI2 11SP COMPACT

CODE	YPBZ5
COLOR	2A - CK16/Black Full Glossy
FRAME	Infinito CV Disc, Carbon w/Countervail, Mechanical/ Electronic Di2/EPS shifting compatible, 32" tire compatible, BBset PressFit 86,5x41mm, thru axle 12x142mm, sizes 47-50-53-55-57-59-61cm
BOLTS / HARDWARE	AL7075-T6 large button head bolts, Torx M5*14mm x 4pcs, Celeste w/Bianchi logo
SEATPOST CLAMP	included in the frame
HEADSET	Fsa Orbit C-40-ACB ; NO.42/47/CF/ACB, Sealed ABC bearings 1.1/8" Top, 1.5" Btm (for 46/56mm Head Tubes), w/alloy carbon top cap
FORK	Bianchi Full Carbon w/Countervail, Disc, thru axle 12x100mm, Flat Mount caliper, 32" tire compatible
SHIFTER	Shimano Ultegra Di2 ST-R8070 2x11sp
REAR DERAILLEUR	Shimano Ultegra Di2 11sp RD-R8050 SS Shadow Design 11sp, top normal, direct attachment, Max 30T
FRONT DERAILLEUR	Shimano Ultegra Di2 FD-R8050, brazed-on type
ELECTRIC CABLE	Shimano Junction A EW-RS910, handlebar built-in type, e-tube port X2, charging port X1
BATTERY / MOUNT	Shimano Battery BT-DN110-1
CHARGER / PWR CABLE	Shimano Battery charger SM-BCR2, including charging cord for usb
CRANKSET	Shimano Ultegra FC-R8000 50x34T, Hollowtech II, Crank Length: 170mm-47/53cm, 172.5mm-55/59cm, 175mm-61cm
BOTTOM BRACKET	Shimano SM-BB72-41B, PressFit
CHAIN	Shimano Ultegra CN-HG701-11, 11sp
CASSETTE / FREEWHEEL	Shimano Ultegra CS-R8000, 11-12-13-14-15-17-19-21-24-27-30T
BRAKE	Shimano BR-R8070 Hydraulic disc brake, flat mount calipers

BRAKE LEVER	included w/shifters
DISC ROTOR	Shimano SM-RT800 Center Lock, diam. 160mm
RIM/WHEELSET	Fulcrum Racing 418 disc brake, R400 aluminium asymetric rims 622x17c, tubeless ready, profile 34mm, thru axle front 12x100mm, rear 12x142mm, Center Lock AFS
TIRE	Vittoria Rubino Pro G2.0 graphene 700x28, 150TPI, Folding, Black
STEM	Reparto Corse 3D Forged alloy 7050, rise +/-7°, 1.1/8", alloy faceplate, Ext: 70mm-47cm, 90mm-50cm, 100mm-53cm, 110mm-55cm, 120mm-57/59cm, 130mm-61cm
HANDLEBAR	Reparto corse full carbon, diam. 31.8mm, reach 76mm, drop 120mm, 4∫ outward bend, Size: 400mm-44/50cm, 420mm-53/57cm, 440mm-59/61cm
GRIP / TAPE	Black soft Microfiber tapes w/shockproof Eva-139
SEATPOST	Infinito Full Carbon, clamp with alloy head adjustable and reversible +/- 35mm, length: 350mm-47/57cm, 380mm-59/61cm, Setback 25mm/-10mm
SADDLE	Fi'zi:k Aliante R5 open Large, MicroTex cover, S-Alloy rails, 280x152mm, Integrated Clip System
BOTTLE CAGE	Elite Paron Race composit
WATER BOTTLE	Bianchi Loli 600ml

INFINITO CV DISC - ULTEGRA 11SP COMPACT

CODE	YPB54
COLOR	2A - CK16/Black Full Glossy, 2R - Black/Graphite Full Glossy
FRAME	Infinito CV Disc, Carbon w/Countervail, Mechanical/ Electronic Di2/EPS shifting compatible, 32" tire compatible, BBset PressFit 86,5x41mm, thru axle 12x142mm, sizes 47-50-53-55-57-59-61cm
BOLTS / HARDWARE	AL7075-T6 large button head bolts, Torx M5*14mm x 4pcs, Celeste w/Bianchi logo
SEATPOST CLAMP	included in the frame
HEADSET	Fsa Orbit C-40-ACB ; NO.42/47/CF/ACB, sealed ACB bearings 1.1/8" Top, 1.5" Btm (for 46/56mm Head Tubes), w/alloy carbon top cap
FORK	Bianchi Full Carbon w/Countervail, Disc, thru axle 12x100mm, Flat Mount caliper, 32" tire compatible
SHIFTER	Shimano Ultegra ST-R8020 2x11sp, hydraulic discbrake, Shimano Ultegra ST-R8025 2x11sp, smallerlever size for sizes 47/53cm
REAR DERAILLEUR	Shimano Ultegra RD-R8000 SS 11sp, top normal shadow design, direct attachment, Max 25-30T for double
FRONT DERAILLEUR	Shimano Ultegra FD-R8000, down swing, brazed-on type, 61-66°, max chainring 46/53T, CL: 43,5mm
CRANKSET	Shimano Ultegra FC-R8000 50x34T, Hollowtech II, crank length: 170mm-47/53cm, 172.5mm-55/59cm, 175mm-61cm
BOTTOM BRACKET	Shimano SM-BB72-41B, PressFit
CHAIN	Shimano Ultegra CN-HG701-11, 11sp
CASSETTE / FREEWHEEL	Shimano Ultegra CS-R8000, 11-12-13-14-15-17-19-21-24-27-30T
BRAKE	Shimano BR-R8070 Hydraulic disc brake, flat mount calipers
BRAKE LEVER	included w/shifters

DISC ROTOR	Shimano SM-RT800 Center Lock, diam. 160mm
RIM/WHEELSET	Fulcrum Racing 518 disc brake, R600 aluminium asymetric rims 622X17c, tubeless ready, profile 26mm, thru axle front 12mmx100mm, rear 12x142mm
TIRE	Vittoria Rubino Pro G2.0 graphene 700x28, 150TPI, Folding, Black
STEM	Reparto Corse 3D Forged alloy 7050, rise +/-7°, 1.1/8", alloy faceplate, Ext: 70mm-47cm, 90mm-50cm, 100mm-53cm, 110mm-55cm, 120mm-57/59cm, 130mm-61cm
HANDLEBAR	Reparto Corse Compact Flat Top, alloy 2014 diam. 31,8mm, reach 80mm, drop 130mm, Size: 400mm-47/50cm , 420mm-53/57cm, 440mm-59/61cm **OPTION HANDLEBAR:** Vision Metron 5D , drop 125mm, reach 80mm, Ext: 100x400mm-47/50cm, 110x420mm-53/55cm, 120x420mm-57/59cm, 130x440mm-61cm
GRIP / TAPE	Black soft Microfiber tapes w/shockproof Eva-139
SEATPOST	Infinito Full Carbon, clamp with alloy head adjustable and reversible +/- 35mm, length: 350mm-47/57cm, 380mm-59/61cm, Setback 25mm/-10mm
SADDLE	Fi'zi:k Aliante R7, nylon carbon reinforced shell w/ WingFlex, Manganese rail, ICS system
BOTTLE CAGE	Elite Paron Race composit
WATER BOTTLE	Bianchi Loli 600ml

INFINITO CV DISC - KIT TELAIO

CODE	XOB24
COLOR	2A - CK16/Black Full Glossy, 2R - Black/Graphite Full Glossy
FRAME	Infinito CV Disc, Carbon w/Countervail, Mechanical/Electronic Di2/EPS shifting compatible, 32" tire compatible, BBset PressFit 86,5x41mm, thru axle 12x142mm, sizes 47-50-53-55-57-59-61-63cm
BOLTS / HARDWARE	AL7075-T6 large button head bolts, Torx M5*14mm x 4pcs, Celeste w/Bianchi logo
SEATPOST CLAMP	included with the frame
HEADSET	Fsa Orbit C-40-ACB ; NO.42/ACB, Sealed ACB Bearings 1.1/8" ACB Top, 1.5" ACB Btm (for 46/56mm Head Tubes), w/15mm alloy cap
FORK	Bianchi Full Carbon w/Countervail, 1.5" head, Disc, flat mount, thru axle 12x100mm, 32" tire compatible
SEATPOST	Infinito Full Carbon, clamp with alloy head adjustable and reversible +/- 35mm, length: 350mm-47/57cm, 380mm-59/61cm, Setback 25mm/-10mm

Bianchi

INFINITO XE DISC

POSITIONING
With Infinito XE, Bianchi extends the availability of the Infinito family. Perfect for the granfondo rider who is still deadly serious about performance and aesthetics.

COURSE/TERRAIN
Road, hilly courses.

END USE DESTINATION
Infinito XE is perfect to spend long hours on the saddle.
It also proves to be the ideal granfondo machine.

KEY FEATURES
- Full carbon frame
- Endurance geometry
- Dedicated alloy stem and spacers for a better head tube connection
- Dedicated alloy seatpost with integrated look
- Chain stays length: 415mm (47/57cm), 420mm (59/61cm)
- 1.1/8" to 1.5" head tube
- 86.5x41mm BBset
- Internal hydraulic cable guide housing
- Mechanic and electronic shifting compatible
- Flat mount calipers and thru axle 12x100mm - 12x142mm
- 7 sizes: 47, 50, 53, 55, 57, 59 and 61cm
- Weight: 1.100g
- Tire size: up to 700x32

LIGHTWEIGHT ●●●●●●○○○○
DESIGN ●●●●●●●○○○
COMFORT ●●●●●●●○○○
PERFORMANCE ●●●●●●●●○○

GEOMETRY - ENDURANCE

MIS-SLP													
A1	A	B1	C	D	E	F	G	G1	H	I	X	Y	WB
470	420	515	415	68	120	580	74.5°	70.5°	43	375	371	521	986
500	450	525	415	68	135	583	74.5°	71.5°	43	375	375	539	988
530	480	535	415	68	150	588	74°	71°	43	375	377	553	993
550	500	550	415	68	165	593	73.5°	72°	43	375	381	569	999
570	520	560	415	68	180	599	73.5°	72.5°	43	375	386	585	1004
590	540	575	420	68	195	608	73°	72.5°	43	375	391	600	1019
610	560	585	420	68	210	612	72.5°	72.5°	43	375	392	614	1023

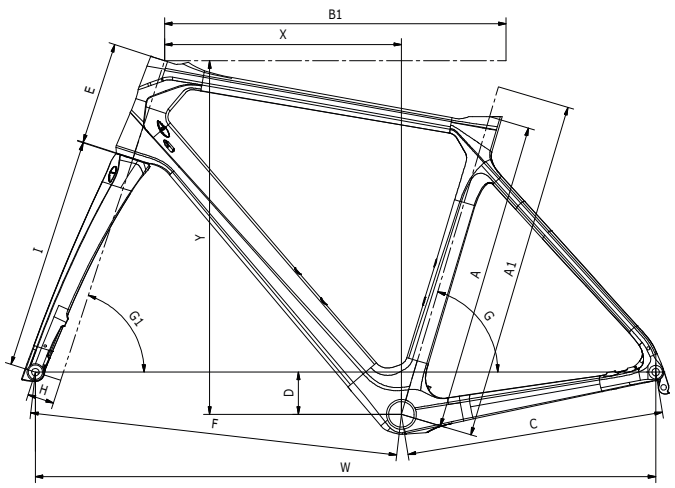

DISC POWER

Thru axles both front (12x100mm) and rear (12x142mm) ensure no stress to the frame caused by braking, and with a tyre width compatibility up to 32mm the Infinito XE is capable of taking you further than ever before.

INTEGRATED LOOK

The clean lines of the bike are maintained with all hydraulic cables routed internally and the dedicated alloy seatpost has been developed for the ultimate streamlined, integrated look.

Talking of streamlined, the alloy stem and spacers have been created by Bianchi for a better head tube connection.

INFINITO XE DISC - ULTEGRA 11SP COMPACT

CODE	YPB6D
COLOR	5K - CK16/Black Full Glossy, 5H - UD Carbon/Graphite Full Glossy
FRAME	Infinito XE Disc carbon, tapered HT 1.1/8"- 1.5", Mechanical/Electronic Di2 shifting compatible, compatible with 32" tire, PressFit 86,5x41mm BBset, thru axle 12x142mm, sizes 47-50-53-55-57-59-61cm
SEATPOST CLAMP	included in the frame
HEADSET	Fsa NO.42/47CF/ACB/5D, ACB bearings 1.1/8" Top, 1.5" Btm, w/Matt UD Carbon top cap, stack height 11,8mm
FORK	Bianchi Full Carbon Disc, 1.5" head, thru axle 12x100mm, compatible with 32" tire
SHIFTER	Shimano Ultegra ST-R8020 2x11sp, hydraulic discbrake, Shimano Ultegra ST-R8025 2x11sp, smallerlever size for sizes 47/53cm
REAR DERAILLEUR	Shimano Ultegra RD-R8000 GS 11sp, top normal shadow design, direct attachment, compatible with low gear 28-34T
FRONT DERAILLEUR	Shimano Ultegra FD-R8000, down swing, band type (34.9mm), 61-66° for 46/53T cl: 43,5mm
CRANKSET	Shimano Ultegra FC-R8000 50x34T, Hollowtech II, Crank Length: 170mm-47/53cm, 172.5mm-55/59cm, 175mm-61cm
BOTTOM BRACKET	Shimano SM-BB71-41B, PressFit
CHAIN	Shimano Ultegra CN-HG701-11, 11sp
CASSETTE / FREEWHEEL	Shimano Ultegra CS-R8000, 11-12-13-14-15-17-19-21-24-27-30T
BRAKE	Shimano BR-R8070 Hydraulic disc brake, flat mount calipers
BRAKE LEVER	included w/shifters

DISC ROTOR	Shimano SM-RT800 Center Lock, diam. 160mm
RIM/WHEELSET	Fulcrum Racing 900 DB, C19 2WayFit rims, thru axle front 12x100mm, rear 12x142mm
TIRE	Vittoria Zaffiro Pro Slick 700x28, 60TPI, Folding, black
STEM	Reparto Corse, 3D Forged Alloy 6061, rise +/- 7°, 1.1/8", AL6061 faceplate, Ext: 70mm-47cm, 90mm-50cm, 100mm-53cm, 110mm-55cm, 120mm-57/61cm
HANDLEBAR	Reparto Corse Compact, Flat Top, alloy 6061 diam. 31,8mm, reach 80mm, drop 130mm, Size: 400mm-47/53cm, 420mm-55/59cm, 440mm-61cm
GRIP / TAPE	La Spirale Ribbon cork w/carbon look plug w/Bianchi logo
SEATPOST	Reparto Corse, AL2014 shaft, AL6061 head, adjustable offset (25mm/+10mm), length: 350mm-47/57cm, 380mm-59/61cm
SADDLE	Selle Royal SR Asphalt GF, Filo rail, Soft performance cover, 280x149mm
BOTTLE CAGE	Elite Paron Race composit
WATER BOTTLE	Bianchi Loli 600ml

INFINITO XE DISC - 105 11SP COMPACT

CODE	YPB7D
COLOR	5K - CK16/Black Full Glossy, 5H - Black/CK16-Graphite Full Glossy
FRAME	Infinito XE Disc carbon, tapered HT 1.1/8"- 1.5", Mechanical/Electronic Di2 shifting compatible, compatible with 32" tire, PressFit 86,5x41mm BBset, thru axle 12x142mm, sizes 47-50-53-55-57-59-61cm
SEATPOST CLAMP	included in the frame
HEADSET	Fsa NO.42/47CF/ACB/5D, ABC bearings 1.1/8" Top, 1.5" Btm, w/Matt UD Carbon top cap, stack height 11,8mm
FORK	Bianchi Full Carbon Disc, 1.5" head, thru axle 12x100mm, compatible with 32" tire
SHIFTER	Shimano 105 ST-R7020 2x11sp, Hydraulic discbrake, Shimano 105 ST-R7025 2x11sp smaller leversize for sizes 47-50-53cm
REAR DERAILLEUR	Shimano 105 RD-R7000 GS 11sp, top normalshadow design, direct attachment
FRONT DERAILLEUR	Shimano 105 FD-R7000-L, down-swing, brazed-on type, 61-66°, max chainring: 46-53T, CL:43.5mm, black
CRANKSET	Shimano 105 FC-R7000 50x34T, HollowtechII, crank length: 170mm-47/53cm, 172.5mm-55/59cm, 175mm-61cm
BOTTOM BRACKET	Shimano SM-BB71-41B, PressFit
CHAIN	Kmc X11-1 EPT finish, 11sp
CASSETTE / FREEWHEEL	Shimano 105 CS-R7000, 11-12-13-14-16-18-20-22-25-28-32T
BRAKE	Shimano BR-RS505, flat mount, hydraulic disc brake
BRAKE LEVER	included w/shifters

DISC ROTOR	Shimano SM-RT70, Center Lock, with Ice Technology, diam. 160mm
RIM/WHEELSET	Fulcrum Racing 900 DB, C19 2WayFit rims, thru axle front 12x100mm, rear 12x142mm
TIRE	Vittoria Zaffiro Pro Slick 700x28, 60TPI, Folding, black
STEM	Reparto Corse, 3D Forged alloy 6061, rise +/-7°, 1.1/8", alloy 6061 faceplate, ext: 70mm-47cm, 90mm-50cm, 100mm-53cm, 110mm-55cm, 120mm-57/61cm
HANDLEBAR	Reparto Corse Compact, Flat Top, alloy 6061 diam. 31.8mm, reach 80mm, drop 130mm, Size: 400mm-47-53cm, 420mm-55/59cm, 440mm-61cm
GRIP / TAPE	La Spirale Ribbon cork w/carbon look plug w/Bianchi logo
SEATPOST	Reparto Corse, AL2014 shaft, AL6061 head, adjustable offset (25mm/+10mm), length: 350mm-47/57cm, 380mm-59/61cm
SADDLE	Selle Royal SR Asphalt GF, Filo rail, Soft performance cover, 280x149mm
BOTTLE CAGE	Elite Paron Race composit
WATER BOTTLE	Bianchi Loli 600ml

COLORS

5K - CK16/Black Full Glossy

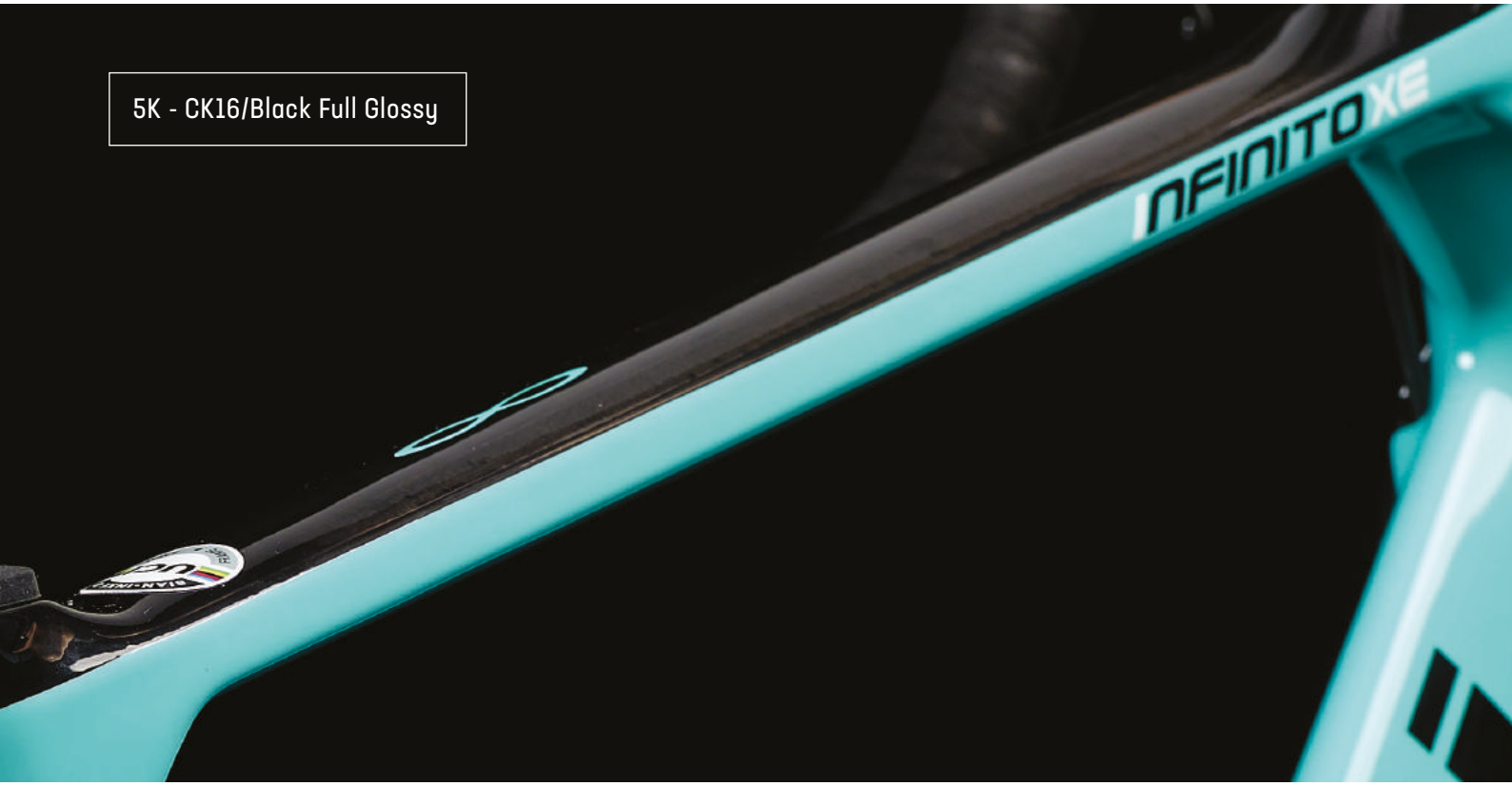

5H - Black/CK16-Graphite Full Glossy

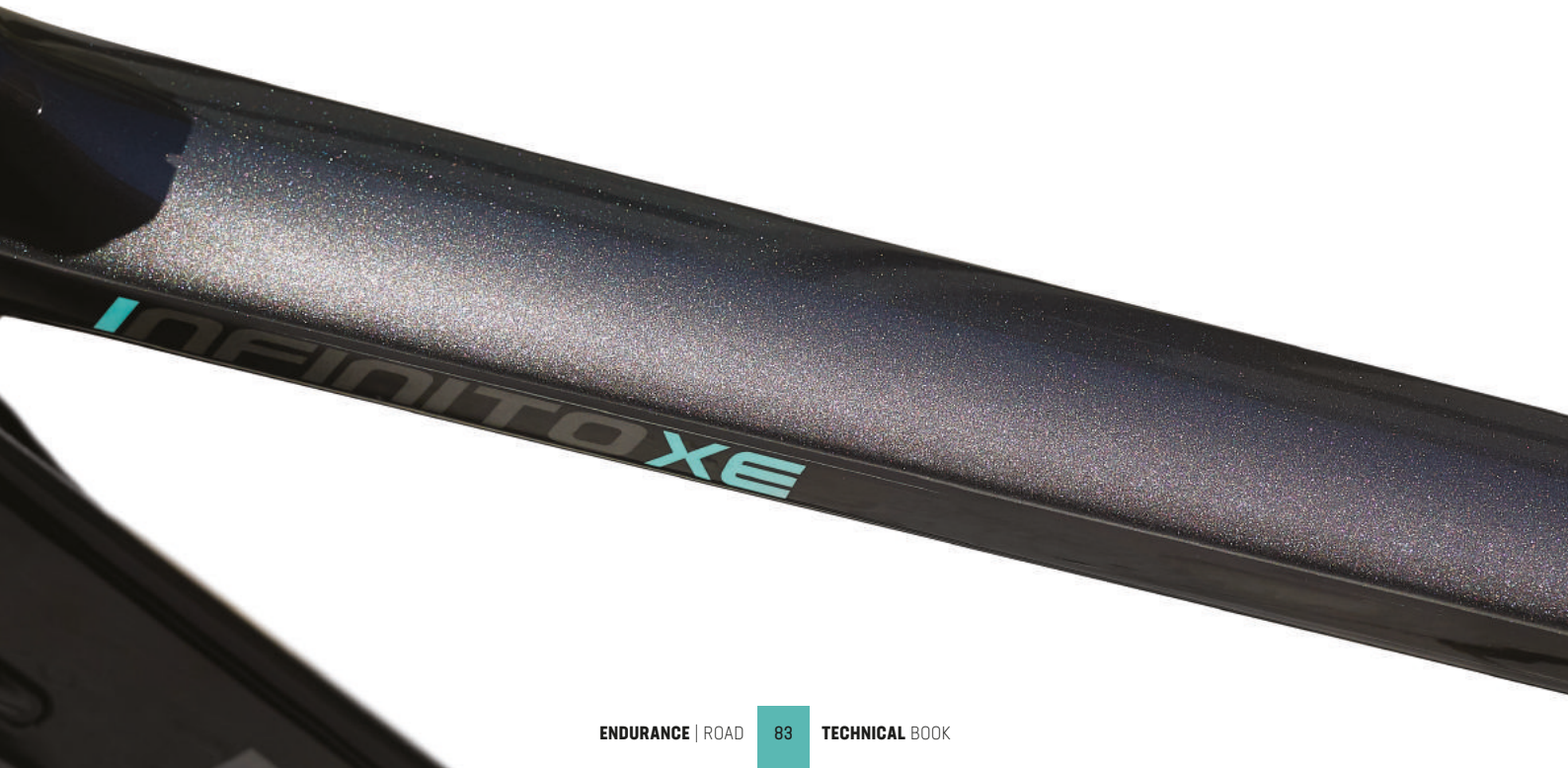

VIA NIRONE 7

POSITIONING
The address of Edoardo Bianchi's first workshop in Milan gives the name to the model: Via Nirone 7. Ideal bike to approach road cycling, at entry level price.

COURSE/TERRAIN
Road, mixed courses.

END USE DESTINATION
Ideal for new cyclists aiming at their first sportive rides.

KEY FEATURES
- Aluminum triple butted hydroforming frame
- Endurance geometry
- New down tube and top tube shape
- New internal cable routing
- Alu/Carbon fork with "straight/bent" blades and kevlar 1k
- Hydroformed frame
- 9 sizes available (man): from 44 to 63
- 5 sizes available (woman): from 44 to 55

LIGHTWEIGHT ●●●●●●○○○○
DESIGN ●●●●●○○○○○
COMFORT ●●●●●●●○○○
PERFORMANCE ●●●●●○○○○○

GEOMETRY - ENDURANCE

MIS-SLP

	A1	AS	B1	BS	C	D	E	F	G	G1	Y	X
WOMAN	440	420	510	493	406	58	120	578	75°	70.5°	508	371
	460	440	520	502	408	58	125	580	74.5°	71°	515	375
	500	470	525	507	408	68	130	580	74.5	71.5°	531	376
	530	500	535	519	408	68	145	585	74°	71.5°	546	377
	550	520	550	534	410	68	155	592	73.5°	72°	557	384
	570	540	560	544	410	68	175	602	73.5°	72°	576	388
	590	560	575	559	410	68	185	607	73°	72.5°	587	395
	610	580	585	568	412	68	210	612	72.5°	72.5°	611	392
	630	600	595	578	412	68	220	617	72.5°	73°	622	399

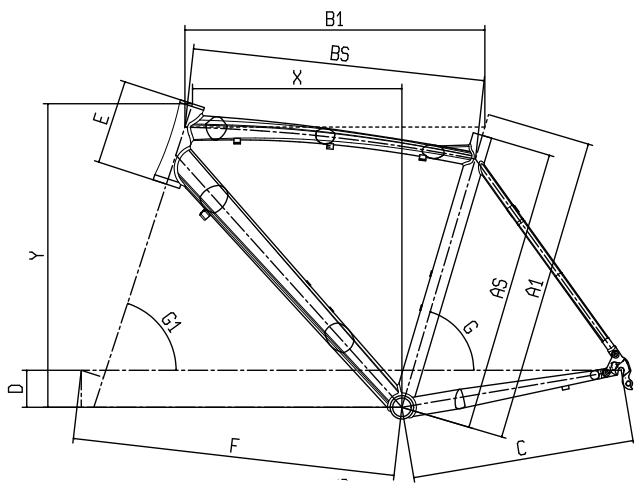

VIA NIRONE 7 - 105 11SP COMPACT

CODE	YPBW7
COLOR	1D- CK16/Black full glossy, 5F- Black/CK16 full glossy
FRAME	Via Nirone 7 alu, hydroforming tubing, internal cable routing, seatpost diam 31.6mm, sizes 46-50-53-55-57-59-61cm
SEATPOST CLAMP	MX-112C Aluminium clamp, diam. 35mm
HEADSET	Fsa NO.8B/ZS4D 1.1/8" semi-integrated lower part + integrated upper part, w/15mm Top cover for 46mm/50 OD head tube
FORK	Bianchi Alu/Carbon w/Kevlar, 1.1/8"
SHIFTER	Shimano 105 ST-R7000 2x11sp
REAR DERAILLEUR	Shimano 105 RD-R7000 GS 11sp, top normalshadow design, direct attachment
FRONT DERAILLEUR	Shimano 105 FD-R7000-L, down-swing, 34.9mm band type, 61-66°, max chainring: 46-53T, CL:43.5mm, black
CRANKSET	Shimano FC-RS510 50x34T, Crank Length: 170mm-44/53cm, 172.5mm-55/59cm, 175mm-60/63cm
BOTTOM BRACKET	Shimano SM-BBR60
CHAIN	Kmc X11-1 EPT finish, 11sp
CASSETTE / FREEWHEEL	Shimano 105 CS-R7000, 11-12-13-14-16-18-20-22-25-28-32T
BRAKE	Shimano BR-R561-L, shoes R55CT4, black
BRAKE LEVER	included w/shifters
RIM/WHEELSET	Shimano WH-RS100
TIRE	Vittoria Zaffiro 25-622, 700x25, 26TPI, rigid, black
STEM	Reparto Corse Alloy 6061, rise +/-7°, 1.1/8", Ext: 70mm-44/46cm, 90mm-50/53cm, 100mm-55cm, 110mm-57/59cm, 120mm-61cm, 130mm-63cm
HANDLEBAR	Reparto Corse Compact, Flat Top, alloy 6061 diam. 31,8mm, reach 80mm, drop 130mm, Size: 400mm-44/53cm, 420mm-55/59cm, 440mm-61/63cm
GRIP / TAPE	Cork w/Bianchi logo
SEATPOST	Reparto Corse Alloy 6061 shaft, alloy head, 15mm offset, 31.6mm, Length: 300mm-44/46cm, 350mm-50/63cm
SADDLE	Selle Royal SR 2075HRN, steel rail, 280x145mm
BOTTLE CAGE	Alloy black
WATER BOTTLE	Bianchi Loli 600ml

5F- Black/CK16 full glossy

VIA NIRONE 7 DAMA BIANCA - 105 11SP COMPACT

CODE	YPBY3
COLOR	9L - Black/CK16-White Full Glossy
FRAME	Via Nirone 7 Dama Bianca alu, hydroforming tubing, internal cable, seat post diam. 31.6mm, sizes 44-46-50-53-55cm
SEATPOST CLAMP	MX-112C Aluminium clamp, diam. 35mm
HEADSET	Fsa N0.8B/ZS4D 1.1/8" semi-integrated lower part + integrated upper part, w/15mm Top cover for 46mm/50 OD head tube
FORK	Bianchi Alu/Carbon w/Kevlar, 1.1/8"
SHIFTER	Shimano 105 ST-R7000 2x11sp
REAR DERAILLEUR	Shimano 105 RD-R7000 GS 11sp, top normalshadow design, direct attachment
FRONT DERAILLEUR	Shimano 105 FD-R7000-L, down-swing, 34.9mm band type, 61-66°, max chainring: 46-53T, CL:43.5mm, black
CRANKSET	Shimano FC-RS510 50x34T, Crank Length: 165-44/46cm, 170-50/55cm
BOTTOM BRACKET	included w/crankset
CHAIN	Kmc X11-1 EPT finish
CASSETTE / FREEWHEEL	Shimano CS-HG70011, 11-13-15-17-19-21-23-25-27-30-34T
BRAKE	Shimano BR-R561-L, shoes R55CT4, black
BRAKE LEVER	included w/shifters
RIM/WHEELSET	Shimano WH-RS100
TIRE	Vittoria Zaffiro 25-622, 700x25, 26TPI, rigid, black
STEM	Reparto Corse Alloy 6061, rise +/-7°, 1.1/8", Ext:70mm-44/46cm, 90mm-50/55cm
HANDLEBAR	Reparto Corse Compact Flat Top, alloy 6061, diam. 31.8mm, reach 70mm, drop 120mm, Size: 380mm-44/46cm, 400mm-50/55cm
GRIP / TAPE	Cork w/Bianchi logo
SEATPOST	Reparto Corse AL6061 shaft, alloy head, diam. 31.6mm, 15mm offset, length: 300mm-44/46cm, 350mm-50/55cm
SADDLE	Selle Royal SR 2075DRN, steel rails, PVC cover, 275x155mm
BOTTLE CAGE	Alloy black
WATER BOTTLE	Bianchi Loli 600ml

VIA NIRONE 7 DAMA BIANCA - SORA 9SP COMPACT

CODE	YPBF3
COLOR	7K - CK16/Black-White Full Glossy
FRAME	Via Nirone 7 Dama Bianca alu, hydroforming tubing, internal cable, seat post diam. 31.6mm, sizes 44-46-50-53-55cm
SEATPOST CLAMP	MX-112C Aluminium clamp, diam. 35mm
HEADSET	Fsa NO.8B/ZS4D 1.1/8" semi-integrated lower part + integrated upper part, w/15mm Top cover for 46mm/50 OD head tube
FORK	Bianchi Alu/Carbon w/Kevlar, 1.1/8" head
SHIFTER	Shimano Sora ST-R3000 2x9sp
REAR DERAILLEUR	Shimano Sora RD-R3000 GS 9sp, Max 34T
FRONT DERAILLEUR	Shimano Sora FD-R3000 9sp, band type 34.9mm
CRANKSET	Shimano FC-R345-L 50x34T Octalink, Crank Length: 170-44/55cm
BOTTOM BRACKET	Shimano BB-ES300
CHAIN	Kmc X9 9sp
CASSETTE / FREEWHEEL	Shimano CS-HG400-9, 11-13-15-17-20-23-26-30-34T
BRAKE	Reparto Corse RC-476, Forged Alloy Dual-Pivot caliper w/ cartridge pad
BRAKE LEVER	included w/shifters
FRONT HUB	Formula RB-72 alloy, 2 sealed bearings, 14G*100*108mm, 28 holes, w/Qr
REAR HUB	Formula RB-55 alloy, 2 sealed bearings, 14Gx130x140mm, 28H, w/Qr
RIM/WHEELSET	Reparto Corse ABR-1, alloy double wall, 700c 622x17c, 2-14H F/V

TIRE	Vittoria Zaffiro 25-622, 700x25, 26TPI, rigid, black
STEM	Reparto Corse Alloy 6061, rise +/-7°, 1.1/8", Ext:70mm-44/46cm, 90mm-50/55cm
HANDLEBAR	Reparto Corse Compact Flat Top, alloy 6061, diam. 31.8mm, reach 70mm, drop 120mm, Size: 380mm-44/46cm, 400mm-50/55cm
GRIP / TAPE	Cork w/Bianchi logo
SEATPOST	Reparto Corse Alloy 6061 shaft, alloy head, 15mm offset, 31.6mm, Length: 300mm-44/46cm, 350mm-50/55cm
SADDLE	Selle Royal SR 2075DRN, steel rails, PVC cover, 275x155mm
BOTTLE CAGE	Alloy black
WATER BOTTLE	Bianchi Loli 600ml

TT & TRIATHLON

AQUILA CV

AQUILA CV

POSITIONING
High performance machine to race against the clock.
Developed in cooperation with World Tour pro cyclists.
Winner of stages at Giro d'Italia and Tour the France

COURSE/TERRAIN
Road, flat and hilly courses.

END USE DESTINATION
Time-trial, triathlon events.

KEY FEATURES
- Hi-modulus carbon fiber monocoque frame with Countervail material
- Full carbon fork, straight blades with covered V-brakes
- Dedicated geometry with 76.5° seat tube angle, 72° head tube angle
- Horizontal rear adjustable dropouts to minimize the distance between the rear wheel and the seat tube, reducing the turbulence between the disc rear wheel and the oversize seat tube
- Compatible for mechanic and electronic groupset
- Fully internal cable routing
- Tavolozza on-line color configurator
- Weight: 1.450 g
- 4 sizes: XS - S - M - L

LIGHTWEIGHT ●●●●●●●●○○
DESIGN ●●●●●●●●●●
COMFORT ●●●●●●○○○○
PERFORMANCE ●●●●●●●●●●

GEOMETRY - TT & TRIATHLON

MIS

	A	B	C	D	E	F	G	G1	Y	X
XS	460	500	398	75	80	563	76.5°	72°	483	378
S	550	530	398	75	90	590	76.5°	72°	492	403
M	580	555	398	75	120	618	76.5°	72°	521	422
L	610	580	398	75	150	645	76.5°	72°	550	440

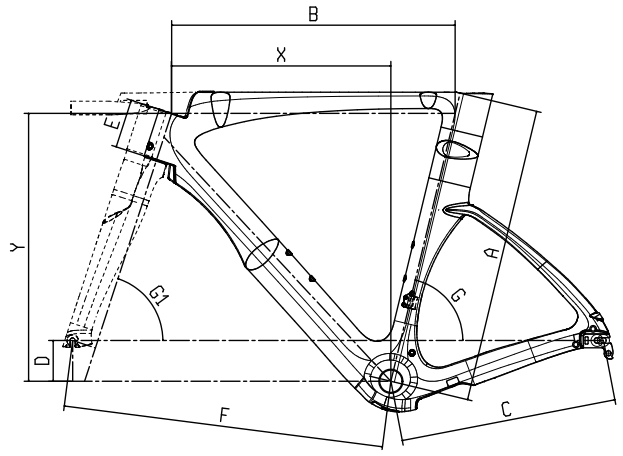

SUPER AERO HANDLEBAR

Aquila CV features full NACA (National Advisory Committee for Aeronautics) airfoil shape of the handlebar (designed by Bianchi). Three different stem lengths:

1. **90mm**
2. **115mm**
3. **140mm**

CONCEALED BRAKES

Bianchi engineered a customized front tube cover, to smoothly hide the V-brake system. The rear V-brake is positioned in the bottom-bracket area to minimize the aerodynamic drag.

DOUBLE POSITIONING SEATPOST

TT and triathlon configuration with +/- 18mm setback.

AQUILA CV - ULTEGRA 11SP

CODE	YPBF4
COLOR	1D - CK16/Black Glossy, Tavolozza
FRAME	Aquila CV carbon w/Countervail, Mechanical/Electronic shifting compatible, PressFit 86,5x41mm, w/carbon cover, size XS-SM-MD-LG
BOLTS / HARDWARE	AL7075-T6 large button head Torx M5*14mm x 2pcs, celeste color w/Bianchi logo
HEADSET	Fsa No.8-R, 1.1/8" 45/45 SL alloy ACB Alloy bearings
FORK	Bianchi Full Carbon w/Countervail, 1.1/8", with pivot V-brake, blades straight with brake covered
SHIFTER	Shimano Dura Ace SL-BSR1 2x11sp, Bar end type
REAR DERAILLEUR	Shimano Ultegra RD-R8000 SS 11sp, top normal shadow design, direct attachment, Max 25-30T for double
FRONT DERAILLEUR	Shimano Ultegra FD-R8000, brazed-on type, 61-66°, max chainring 46/53T, CL: 43,5mm
CRANKSET	Shimano Ultegra FC-R8000 52x36T, Hollowtech II, Crank Length: 165mm-XS, 170mm-SM, 172.5mm-MD, 175mm-LG
BOTTOM BRACKET	Shimano SM-BB72-41B, PressFit
CHAIN	Shimano Ultegra CN-HG701-11, 11sp
CASSETTE / FREEWHEEL	Shimano Ultegra CS-R8000, 11-12-13-14-15-17-19-21-23-25-28T
BRAKE	Bianchi Aero-860-BI, Alloy Forged and CNC aluminum arms, Individual spring tension screws left and right, Standard replaceable cartridge pads (2pcs), brake pad for alloy rim
BRAKE LEVER	Shimano Dura Ace BL-TT79 for TT/Triathlon

RIM/WHEELSET	Fulcrum Racing 418, C17 R400 Aluminum rims, profile 35mm
TIRE	Vittoria Rubino Pro G2.0 graphene 700x25, 150TPI, Folding, Black
STEM	included in the handlebar
HANDLEBAR	Bianchi Aero Carbon Fully Integrated flat custom handlebar and stem, width 41mm, stem length 90mm-XS/SM, 110mm-MD, 130mm-LG, top cap included, Di2/EPS compatible, w/FSA bar ends length 260mm
GRIP / TAPE	Black soft Microfiber tapes w/shockproof Eva-139, size: 200*3cm with 4 line hole and plug
SEATPOST	Bianchi Aero Carbon custom shape with alloy head adjustable and reversible +/- 18mm, Length: 300mm-XS/SM, 350mm-MD/LG
SADDLE	Fi'zi:k Mistica MG, nylon carbon reinforced, carriage kit, extra grip cover, rail S alloy

AQUILA CV - FRAME KIT

CODE	XOB28
COLOR	1D - CK16/Black Glossy, Tavolozza
FRAME	Aquila CV carbon w/Countervail, Mechanical/Electronic shifting compatible, PressFit 86,5x41mm, w/carbon cover, size XS-SM-MD-LG
BOLTS / HARDWARE	AL7075-T6 large button head Torx M5*14mm x 2pcs, celeste color w/Bianchi logo
SEATPOST CLAMP	included in the frame
HEADSET	Fsa No.8-R, 1.1/8" 45/45 SL alloy ACB Alloy bearings
FORK	Bianchi Full Carbon w/Countervail, 1.1/8", with pivot V-brake, blades straight with brake covered
BRAKE	Bianchi Aero-860-BI, Alloy Forged and CNC aluminum arms, Individual spring tension screws left and right, Standard replaceable cartridge pads (2pcs), brake pad for alloy rim
STEM	included in the handlebar
HANDLEBAR	Bianchi Aero Carbon Fully Integrated flat custom handlebar and stem, width 41mm, stem length 90mm-XS/SM, 110mm-MD, 130mm-LG, top cap included, Di2/EPS compatible, w/FSA bar ends length 260mm
SEATPOST	Bianchi Aero Carbon custom shape with alloy head adjustable and reversible +/- 18mm, lenght 300mm for XS-SM; 350mm for MD-LG

Bianchi
Vision

CYCLO-CROSS

ZOLDER PRO

ZOLDER PRO

POSITIONING
High performance carbon bike, engineered for cyclocross events.

COURSE/TERRAIN
Mud, gravel, dirt courses.

END USE DESTINATION
Cyclocross races.

KEY FEATURES
- Full carbon monocoque frame
- Straight full carbon fork
- Dedicated geometry for cyclo-cross
- Thru axle 12x100/142mm
- Fully internal cable routing Di2
- Sizes: 48 - 50 - 52 - 54 - 56 - 58

LIGHTWEIGHT ●●●●●●●●●○
DESIGN ●●●●●●●○○○
COMFORT ●●●●●●○○○○
PERFORMANCE ●●●●●●●●●●

GEOMETRY

MIS

A	B1	C	D	E	F	G	G1	H	I	X	Y	WB
480	510	425	53	100	590	75.5°	70.5°	45	400	378	510	1009
500	525	425	58	115	600	75°	70.5°	45	400	383	529	1018
520	535	425	60	125	601	74.5	71°	45	400	385	542	1019
540	545	425	60	135	602	74°	71.5°	45	400	386	554	1020
560	560	425	62	145	606	73.5°	72°	45	400	391	569	1024
580	575	425	62	160	611	73°	72.5°	45	400	396	583	1028

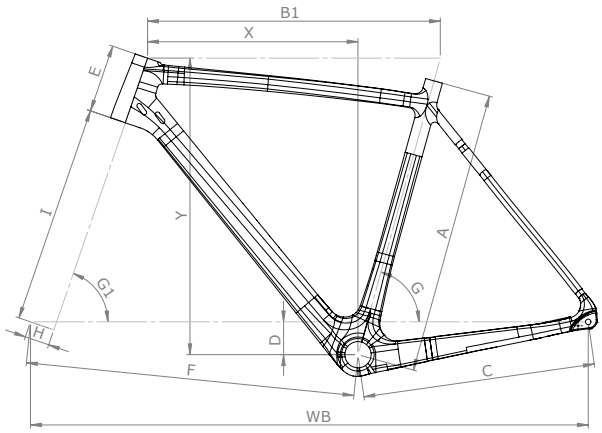

ZOLDER PRO - GRX 600 11SP HYDR. DISC

CODE	YPB51
COLOR	1D - CK16/Black Glossy
FRAME	Zolder Pro carbon, disc, flat mount, PressFit BB 86.5x41mm, headset 1.5"- 1.1/8", thru axle 12x142mm, sizes 48-50-52-54-56-58cm
SEATPOST CLAMP	Promax MX-112C Aluminium clamp, light weight, diam. 31,8mm anti-crimp, finish black
HEADSET	Fsa Orbit C-40-ACB ; NO.42/ACB, Sealed ACB Bearings 1.1/8" ACB Top, 1.5" ACB Btm (for 46/56mm Head Tubes), w/15mm alloy cap
FORK	Bianchi Full carbon 1.5"-1.1/8", disc, flat mount, thru axle 12x100mm
SHIFTER	Shimano GRX 600 ST-RX600 2x11sp
REAR DERAILLEUR	Shimano GRX 810 RD-RX810 Shadow+ Design 11sp, top normal, direct attachment
FRONT DERAILLEUR	Shimano GRX 810 FD-RX810, down-swing, down pull, 61-66°, max 46-50T, CL:46mm
CRANKSET	Shimano GRX 600 FC-RX600 46x30T, Crank Length: 170mm-48/52cm, 172.5mm-54/58cm
BOTTOM BRACKET	Shimano SM-BB72-41B, PressFit
CHAIN	Shimano CN-HG601-11, 11sp
CASSETTE / FREEWHEEL	Shimano 105 CS-R7000 11sp, 11-12-13-14-15-17-19-21-24-27-30T
BRAKE	Shimano BR-RX400 hydraulic disc brake, Flat Mount calipers
BRAKE LEVER	included w/shifters
DISC ROTOR	Shimano SM-RT70, Center Lock, with Ice Technology, diam. 160mm

RIM/WHEELSET	Shimano WH-RS171 w/E-THRU F: 12x110mm, R:12x142mm, clincher 622x19C, Center Lock
TIRE	Vittoria Terreno Mix TNT G+ 33-622/700x33c, nylon 120TPI, foldable
STEM	Reparto Corse 3D Forged alloy 2014, rise -8°, 1.1/8", Ext: 90mm-48/50cm, 100mm-52/54cm, 110mm-56cm, 120mm-58cm
HANDLEBAR	Reparto Corse Compact, Flat Top, alloy 6061 diam. 31,8mm, reach 80mm, drop 130mm, Size: 400mm-48/50cm, 420mm-52/58cm, 440mm-58cm
GRIP / TAPE	Cork w/Bianchi logo
SEATPOST	Reparto Corse UD Carbon shaft, forged alloy head, diam. 27.2mm, 15mm offset, length: 350mm
SADDLE	Selle Royal SR Asphalt GF, Filo rail, Soft performance cover, 280x149mm
BOTTLE CAGE	Alloy black
WATER BOTTLE	Bianchi Loli 600ml

ZOLDER PRO - FRAME KIT

CODE	XOB26
COLOR	1D - CK16 Glossy
FRAME	Zolder Pro carbon, disc, flat mount, PressFit BB 86.5x41mm, headset 1.5"- 1.1/8", thru axle 12x142mm, sizes 48-50-52-54-56-58cm
SEATPOST CLAMP	Promax MX-112C Aluminium clamp, light weight, diam. 31,8mm anti-crimp, finish black
HEADSET	Fsa Orbit C-40-ACB ; NO.42/ACB, Sealed ACB Bearings 1.1/8" ACB Top, 1.5" ACB Btm (for 46/56mm Head Tubes), w/15mm alloy cap
FORK	Bianchi Full carbon 1.5"-1.1/8", disc, flat mount, thru axle 12x100mm

VINTAGE

BIANCHI - L'EROICA

L'EROICA

POSITIONING
Made in Italy vintage bike, certified by the "L'Eroica" commission to be used in all Eroica events in the world.

COURSE/TERRAIN
White roads, gravel.

END USE DESTINATION
Vintage events, collectionism.

KEY FEATURES
- Columbus Zona lugged steel frame - Designed and made in Italy
- Lugged steel fork - Designed and Made in Italy
- Chrome lugged steel finish
- Seatube dimension: 27.2mm
- Lugged head tube 1", down tube shifters, milled seat stay
- Italian BB set, straight dropout with adjuster
- 7 sizes: 50, 53, 55, 57, 59, 61, 63cm

GEOMETRY

MIS-SLP									
A1	B1	C	D	E	F	G	G1	Y	X
500	525	412	68	95	580	74.5°	71.5	512	382
530	535	414	68	100	581	74°	72°	519	385
550	550	415	68	120	589	73.5°	72.5°	539	390
570	560	416	68	140	599	73.5°	72.5°	558	394
590	575	418	68	155	605	73°	73°	574	399
610	585	420	68	175	609	72.5°	73°	593	398
630	595	420	68	195	619	72.5°	73°	612	402

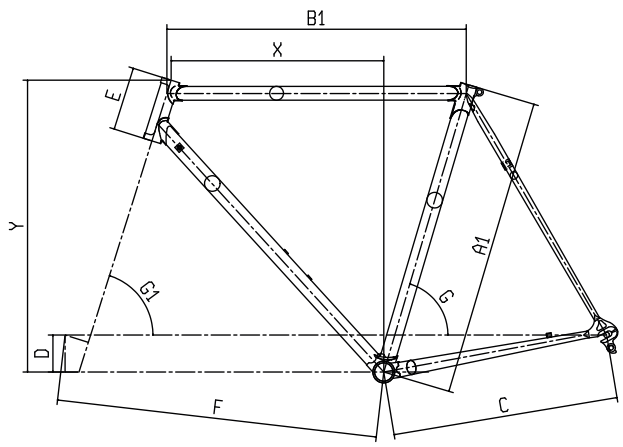

L'EROICA - CAMPAGNOLO 10SP COMPACT

CODE	YLBJ8
COLOR	AA - Celeste Bianchi original/chrome, red glossy
FRAME	Eroica Steel lugged with Columbus Zona tubing, seatube 27.2mm, head tube 1" lugged chromo finish, down tube for shifter, milled seat stay, BBset ITA, straight dropout with adjuster, Sizes (Center to top): 50-53-55-57-59-61-63cm
HEADSET	Aluminium 6061, diam. 1" 26.4mmx30.2mm, threaded steerer tube, cartridge bearing, silver anodized
FORK	Bianchi Steel lugged with head chromo finish
SHIFTER	Dia-Compe W-Shift lever, down tube use, 2x10sp, color silver
REAR DERAILLEUR	Campagnolo Silver vintage 10sp short cage
FRONT DERAILLEUR	Campagnolo Silver vintage 9/10sp band type 31,8mm w/ adapter alloy Fsa from 31,8 to 28,6mm
CRANKSET	Aluminum arm cold forged, polished finish silver, with Bianchi old style logo, chainring 48/36T, crank length: 165mm-50cm, 170mm-53/63cm
BOTTOM BRACKET	Italian 70x116mm
CHAIN	Campagnolo Veloce 10sp
CASSETTE / FREEWHEEL	Campagnolo Veloce UD 10sp 13-29T
BRAKE	Dia-Compe Aluminum CNC Machined, dimension 47-61mm, silver anodized
BRAKE LEVER	Aluminium bracket diecast, aluminium plate lever silver color, cable adjuster hoods rubber brown color
FRONT HUB	Aluminium 6061, wide flange, sealed bearing, O.L.D. 100mm, 32 hole, silver anodized with QR, with Bianchi old style logo
REAR HUB	Aluminium 6061, wide flange, sealed bearing, O.L.D. 130mm, 32 hole, Campagnolo cassette body in alloy, silver anodized with qr, with Bianchi old style logo
RIM/WHEELSET	Ambrosio Montreal 622x13c, aluminium double wall, anodized silver, 32hole, tubular

OPTION WHEELSET1	Ambrosio Excellence 622x13c, aluminium double wall, anodized silver, 32hole, clincher
TIRE	Vittoria Rally 25mm, 28" tubular para/black
TIRE OPTION	Vittoria Zaffiro Pro III 700x25, 60TPI, Folding, para/black
STEM	Aluminum cold forged, angle 70°, diam. 26mm, silver buffed anodized, with Bianchi old style logo, ext: 80mm (130mm leg)-46/53cm, 100mm(180mm leg)-55/61cm
HANDLEBAR	Classic racing bar, aluminium silver anodized, diam. 26mm, width 380mm (drop 125mm)- 400-420mm (drop145mm) size: 380mm-50cm, 400mm-53/57cm, 420mm-59/63cm
GRIP / TAPE	Velo Cotton tape with silver cups
SEATPOST	Aluminium 6061, diam. 27.2mm, silver anodized
SADDLE	Brooks Team Pro Classic, tubular rivet, chrome rail, 273x160mm, height 67mm
BOTTLE CAGE	Elite Ciussi silver
WATER BOTTLE	Celeste w/Bianchi logo
PEDAL	VP-189T barrel polished aluminium, cage ED black, axle 7mm crmo, ball bearing, Toe clip Cp steel length M (size 50-53-55); length L (size 57-59-61-63), Toe strapin leather white color.

L'EROICA - FRAME KIT

CODE	XLBJ8
COLOR	AA - Celeste Bianchi
FRAME	Bianchi L'Eroica lugged steel frame with Columbus Zona tubing double butted, seatube diam. 27.2mm, head tube 1", lugged chromo finish, shifters pivot on down tube, milled seat stay, Italian BBSet, straight dropout with adjuster, sizes (Center to top): 50-53-55-57-59-61-63cm
SEATPOST CLAMP	Steel heat treated bolt, 8*M6*22mm, with anti-pin and two washer
HEADSET	Aluminium 6061, 1", diam. 26.4mmx30.2mm, threaded steerer tube, cartridge bearing, silver
FORK	Bianchi Steel lugged fork, head w/chromo finish

GRAVEL

IMPULSO ALLROAD
VIA NIRONE 7 ALLROAD

IMPULSO ALL ROAD

POSITIONING
Performance and style together in one aluminum gravel bike.

COURSE/TERRAIN
Asphalt, gravel roads, mixed terrain.

END USE DESTINATION
Different cycling experiences: road, commuting, multi-days tourism.

KEY FEATURES
- Lightweight Aluminum frame
- QR50 Thru Axle 12x100/142mm with aluminium QR lever (M12 x P1.5)
- BB set PF41 Shimano
- Flat mount (Shimano standard) disc caliper mount
- 40mm tires compatible
- Full carbon fork 1.1/8"
- 16° flare angle handlebar to enhance handling
- Mudguards and carriers ready
- 8 sizes: 47, 50, 53, 55, 57, 59, 61, 63cm

LIGHTWEIGHT ●●●●●●○○○○
DESIGN ●●●●●●●○○○
COMFORT ●●●●●●○○○○
PERFORMANCE ●●●●●●●●○○

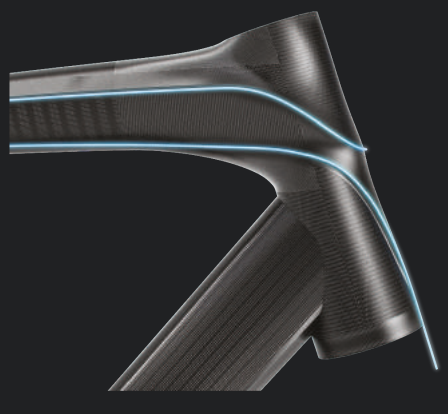

TRIPLE HYDROFORMED TECHNOLOGY
Hydroforming process of top and head tubes.

ADVANTAGES:
1. increased rigidity and structural strenght
2. Improved design

GEOMETRY - GRAVEL

MIS-SLP

A1	AS	B1	BS	C	D	E	F	G	G1	Y
470	450	515	500	437	68	120	74.5°	70°	538	366
500	470	525	509	437	68	125	74.5°	71°	546	374
530	500	535	518	440	68	130	74°	71.5°	553	377
550	520	550	534	440	68	145	73.5	71.5°	567	382
570	540	560	544	440	68	155	73.5°	72°	578	389
590	570	575	559	443	68	175	73°	72°	597	392
610	580	585	568	443	68	185	72.5°	72.5°	610	393
630	610	595	578	443	68	210	72.5	72.5°	632	369

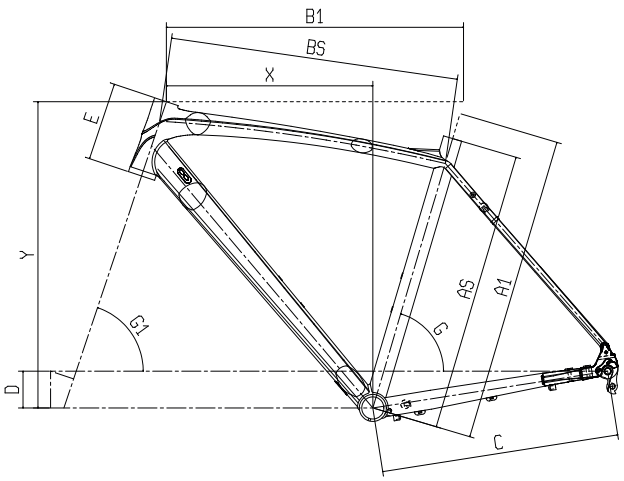

IMPULSO ALLROAD - GRX 810 11SP HYDR. DISC

CODE	YPB8C
COLOR	3C - Black/Titanium Full Matt
FRAME	Impulso Allroad Alu, 1.1/8" HT , seatpost diam. 31.6mm, thru axle 12x142mm, flat mount, PF41 SHIMANO, compatible with 40mm tire, mudguard and rear carrier ready, sizes 47-50-53-55-57-59-61-63cm
SEATPOST CLAMP	MX-112C Aluminium clamp, diam. 35mm
HEADSET	Fsa NO.8B/ZS4D 1.1/8" semi-integrated lower part + integrated upper part, w/15mm Top cover for 46mm/50 OD head tube
FORK	Bianchi Full Carbon 1.1/8", flat mount caliper, thru axle 12x100mm
SHIFTER	Shimano GRX 810 ST-RX810 2x11sp
REAR DERAILLEUR	Shimano GRX 810 RD-RX810 Shadow+ Design 11sp, top normal, direct attachment
FRONT DERAILLEUR	Shimano GRX 810 FD-RX810, down-swing w/34.9mm clamp adapter, down pull, 61-66°, max 46-50T, CL:46mm
CRANKSET	Shimano GRX 810 FC-RX810-2 43x31T, Hollowtech II, Crank Length: 170mm-47/53cm, 172.5mm-55/59cm, 175mm-61/63cm
BOTTOM BRACKET	Shimano SM-BB72-41B, PressFit
CHAIN	Shimano CN-HG601-11, 11sp
CASSETTE / FREEWHEEL	Shimano CS-HG70011, 11-13-15-17-19-21-23-25-27-30-34T
BRAKE	Shimano BR-RX400 hydraulic disc brake, Flat Mount calipers
BRAKE LEVER	included w/shifters
DISC ROTOR	Shimano SM-RT70, Center Lock, with Ice Technology, diam. 160mm

FRONT HUB	Formula CL-712 road disc, alloy, 32h, Center Lock, J-bend spokes, thru axle 12x100mm, 2 sealed bearings
REAR HUB	Formula RXC-142S road disc, Center Lock, J-bend spokes, thru axle 12x142mm, 4 sealed bearings
RIM/WHEELSET	Reparto Corse CXD22 disc, 700c 622-17c, profile 22mm, 32 holes, tubeless ready
TIRE	Kenda Flintridge 700x35, 60TPI, black
STEM	Reparto Corse, Alloy 6061, rise +/-7°, 1.1/8", Ext: 70mm-47cm, 90mm-50/53cm, 100mm-55cm, 110mm-57/59cm, 120mm-61/63cm
HANDLEBAR	Reparto Corse Aluminum 6061, reach 70mm, flare angle 16°, drop cc 120mmx40cm and 130mmx42/44cm, size: 40cm-47/53cm, 42cm-55/59cm, 44cm-61/63cm
GRIP / TAPE	Cork w/Bianchi logo
SEATPOST	Reparto Corse AL6061 shaft, alloy head, 15mm offset, 31.6mm, length: 300mm-47cm, 350mm-50/63cm
SADDLE	Selle Royal SR 2302HRN, w/hole, steel rail, PU soft touch cover, 280x145mm
BOTTLE CAGE	Alloy black
WATER BOTTLE	Bianchi Loli 600ml

IMPULSO ALLROAD - GRX 600 11SP HYDR. DISC

CODE	YPB1C
COLOR	5K - CK16/Black Full Glossy, 3C - Black/Titanium Full Matt
FRAME	Impulso Allroad Alu, 1.1/8" HT , seatpost diam. 31.6mm, thru axle 12x142mm, flat mount, PF41 SHIMANO, compatible with 40mm tire, mudguard and rear carrier ready, sizes 47-50-53-55-57-59-61-63cm
SEATPOST CLAMP	MX-112C Aluminium clamp, diam. 35mm
HEADSET	Fsa NO.8B/ZS4D 1.1/8" semi-integrated lower part + integrated upper part, w/15mm Top cover for 46mm/50 OD head tube
FORK	Bianchi Full Carbon 1.1/8", flat mount caliper, thru axle 12x100mm
SHIFTER	Shimano GRX 600 ST-RX600 2x11sp
REAR DERAILLEUR	Shimano GRX 810 RD-RX810 Shadow+ Design 11sp, top normal, direct attachment
FRONT DERAILLEUR	Shimano GRX 810 FD-RX810, down pull, braze-on type w/34.9mm clamp band adapter, 61-66°, max 46-50T, CL:46mm
CRANKSET	Shimano GRX 600 FC-RX600 46x30T, crank length: 170mm-47/53cm, 172.5mm-55/59cm, 175mm-61/63cm
BOTTOM BRACKET	Shimano SM-BB71-41B, PressFit
CHAIN	Shimano CN-HG601-11, 11sp
CASSETTE / FREEWHEEL	Shimano CS-HG70011, 11-13-15-17-19-21-23-25-27-30-34T
BRAKE	Shimano BR-RX400 hydraulic disc brake, Flat Mount calipers
BRAKE LEVER	included w/shifters
DISC ROTOR	Shimano SM-RT70, Center Lock, with Ice Technology, diam. 160mm

FRONT HUB	Formula CL-712 road disc, alloy, 32h, Center Lock, J-bend spokes, thru axle 12x100mm, 2 sealed bearings
REAR HUB	Formula RXC-142S road disc, Center Lock, J-bend spokes, thru axle 12x142mm, 4 sealed bearings
RIM/WHEELSET	Reparto Corse CXD22 disc, 700c 622-17c, profile 22mm, 32 holes, tubeless ready
TIRE	Kenda Flintridge 700x35, 60TPI, black
STEM	Reparto Corse Alloy 6061, rise +/-7°, 1.1/8", Ext: 90mm-47/53cm, 100mm-55cm, 110mm-57/59cm, 120mm-61/63cm
HANDLEBAR	Reparto Corse Aluminum 6061, reach 70mm, flare angle 16°, drop cc 120mmx40cm and 130mmx42/44cm, size: 40cm-47/53cm, 42cm-55/59cm, 44cm-61/63cm
GRIP / TAPE	La Spirale Ribbon cork w/carbon look plug w/Bianchi logo
SEATPOST	Reparto Corse Alloy6061 shaft, alloy head, 15mm offset, diam. 31.6mm, Length: 300mm-47cm, 350mm-50/63cm
SADDLE	Selle Royal SR 2302HRN, w/hole, steel rails, PU soft touch cover, 280x145mm
BOTTLE CAGE	Alloy black
WATER BOTTLE	Bianchi Loli 600ml

VIA NIRONE 7 ALL ROAD

POSITIONING
The ideal model to enter the gravel world.

COURSE/TERRAIN
Asphalt, gravel roads, mixed terrain.

END USE DESTINATION
Different cycling experiences: road, commuting, multi-days tourism.

KEY FEATURES
- Aluminum frame (hydroforming tubing)
- 68mm BSA BB set
- Flat mount system (Shimano standard)
- 40mm tires compatible
- Alu/carbon fork 1.1/8" with 12x100mm thru axle
- Mudguards and carriers ready
- 8 sizes: 47, 50, 53, 55, 57, 59, 61, 63cm
- Handlebar with 16° flare angle to enhance handling

LIGHTWEIGHT ●●●●●●●●●○
DESIGN ●●●●●●●○○○
COMFORT ●●●●●●○○○○
PERFORMANCE ●●●●●●●○○○

GEOMETRY

MIS-SLP											
A1	AS	B1	BS	C	D	E	F	G	G1	Y	X
470	450	515	499	437	68	120	588	74.5°	70°	538	355
500	470	525	509	437	68	125	589	74.5°	71°	546	374
530	500	535	514	440	68	130	590	74°	71.5°	553	377
550	520	550	534	440	68	145	600	73.5°	71.5°	567	382
570	540	560	544	440	68	155	605	73.5°	72°	578	389
590	560	575	558	443	68	175	614	73°	72°	597	392
610	580	585	566	443	68	185	615	72.5°	72.5°	609	393
630	600	595	578	443	68	210	624	72.5°	72.5°	632	396

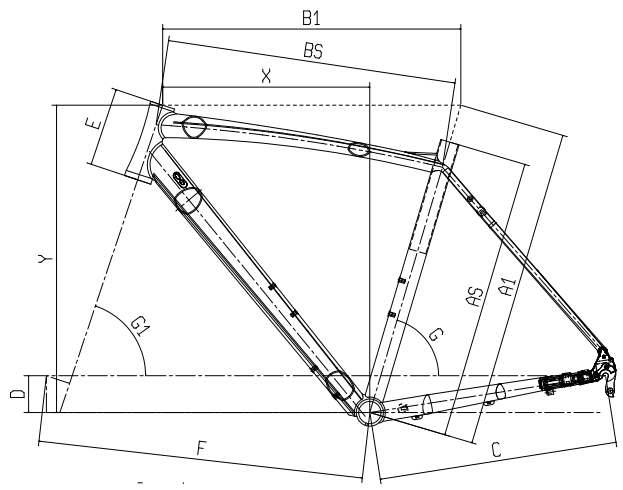

VIA NIRONE 7 ALLROAD - GRX 400 10SP HYDR. DISC

THE IMAGE SHOWN IS INDICATIVE ONLY. Components and graphic details may differ from the actual model.

CODE	YPB62
COLOR	5K - CK16/Black Full Glossy, 3C - Black/Titanium Full Matt
FRAME	Via Nirone 7 Allroad alloy, hydroforming tubing, internal cable routing, seatpost: 31.6mm, flat mount disc brake, thru axle 12x142mm, QR, compatible with 40mm tire, rack & fender ready, downtube underside bottle cage ready, sizes 47-50-53-55-57-59-61-63cm
SEATPOST CLAMP	MX-112C Aluminium clamp, diam. 35mm
HEADSET	Fsa NO.8B/ZS4D 1.1/8" semi-integrated lower part + integrated upper part, w/15mm Top cover for 46mm/50 OD head tube
FORK	Bianchi Carbon Disc, 1.1/8", flat Mount caliper, thru axle 12x100mm
SHIFTER	Shimano GRX 400 ST-RX400 2x10sp
REAR DERAILLEUR	Shimano GRX 400 RD-RX400 Shadow+ Design 10sp, top normal, direct attachment (direct mount compatible)
FRONT DERAILLEUR	Shimano GRX 400 FD-RX400, down-swing w/34.9mm clamp adapter, down-pull, 61-66°, max 46T, CL:46mm
CRANKSET	Shimano FC-RX600 46x30T, Crank Length: 170mm-47/53cm, 172.5mm-55/59cm, 175mm-61/63cm
BOTTOM BRACKET	Fsa BB7420ST, 113MM
CHAIN	Shimano CN-HG54 10sp
CASSETTE / FREEWHEEL	Shimano CS-HG500-10, 11-13-15-17-19-21-23-26-30-34T
BRAKE	Shimano BR-RX400 hydraulic disc brake, Flat Mount calipers
BRAKE LEVER	included w/shifters
DISC ROTOR	Shimano SM-RT64, Center Lock, 160mm

FRONT HUB	Formula CL-712 road disc, alloy, 32h, Center Lock, J-bend spokes, thru axle 12x100mm, 2 sealed bearings
REAR HUB	Formula RXC-142S road disc, Center Lock, J-bend spokes, thru axle 12x142mm, 4 sealed bearings
RIM/WHEELSET	Reparto Corse CXD22 disc, 700c 622-17c, profile 22mm, 32 holes, tubeless ready
TIRE	Kenda Happy Medium 700x35, 30TPI, black
STEM	Reparto Corse Alloy 6061, rise +/-7°, 1.1/8", Ext: 70mm-44/46cm, 90mm-50/53cm, 100mm-55cm, 110mm-57/59cm, 120mm-61cm, 130mm-63cm
HANDLEBAR	Reparto Corse Aluminum 6061, reach 70mm, flare angle 16°, drop cc 120mmx40cm and 130mmx42/44cm, size: 40cm-47/53cm, 42cm-55/59cm, 44cm-61/63cm
GRIP / TAPE	Cork w/Bianchi logo
SEATPOST	Reparto Corse AL6061 shaft, alloy head, 15mm offset, diam. 31.6mm, length 350mm
SADDLE	Selle Royal SR 2302HRN, w/hole, steel rails, PU soft touch cover, 280x145mm
BOTTLE CAGE	Alloy black
WATER BOTTLE	Bianchi Loli 600ml

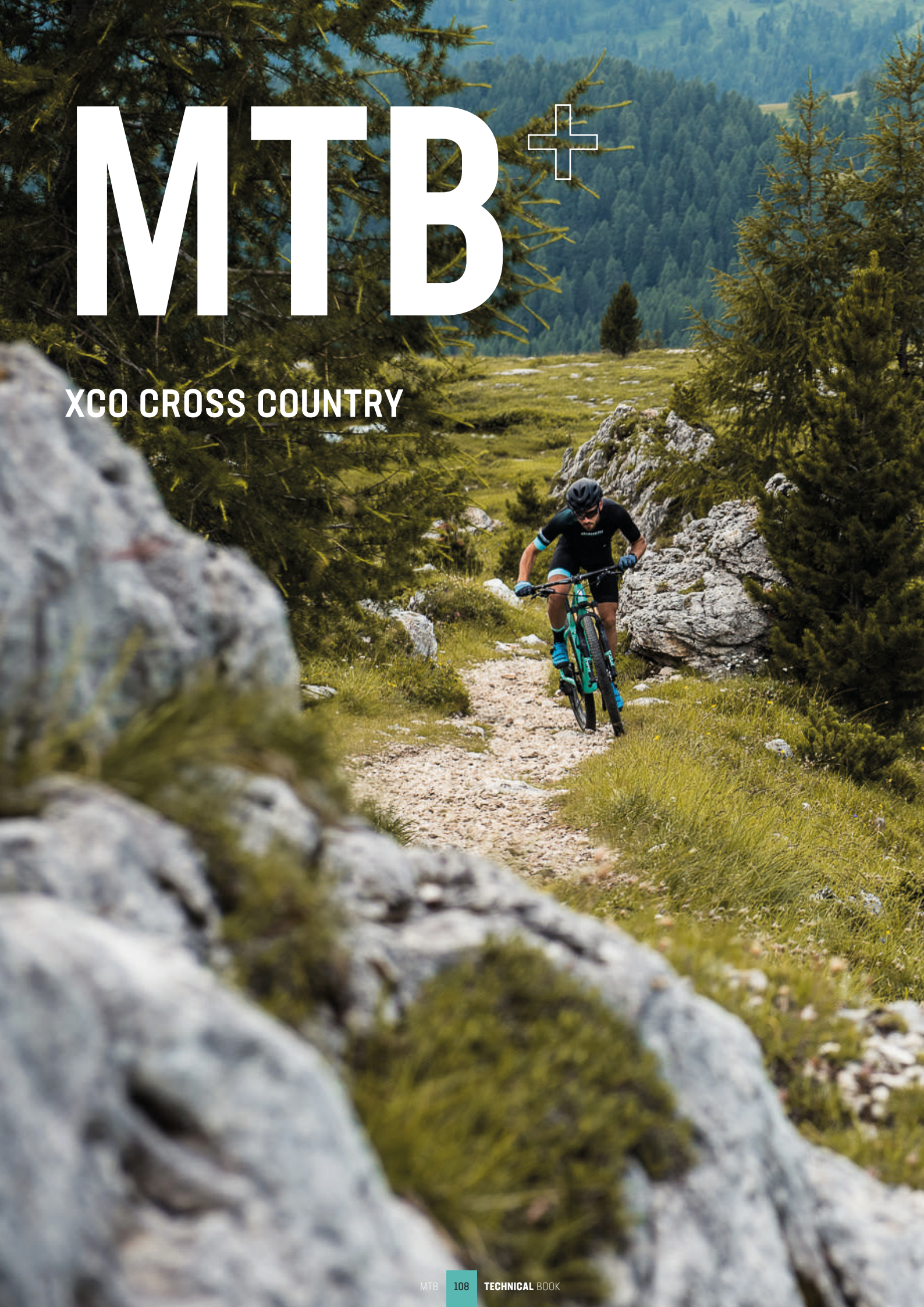

MTB +

XCO CROSS COUNTRY

MTB RANGE OVERVIEW

	XC/MARATHON 100mm<
RACING	Methanol CV FS / Methanol CV RS / Methanol CV S
PERFORMANCE	Nitron
OFF-ROAD	Magma / Duel

BIKE FIT CHART

HANDLEBAR / STEM / CRANKSET

CROSS COUNTRY																			
Methanol CV FS			Methanol CV RS			Methanol CV S			Nitron			Magma			Duel			Road Crankset	
Frame Size	Stem Size	Handle-bar Size (c-c)	Frame Size	Stem Size	Handle-bar Size (c-c)	Frame Size	Stem Size	Handle-bar Size (c-c)	Frame Size	Stem Size	Handle-bar Size (c-c)	Frame Size	Stem Size	Handle-bar Size (c-c)	Frame Size	Stem Size	Handle-bar Size (c-c)	Frame Size	Lenght
S	60	740/760	S	70	700/720	S	70	720	S	70	720	S	80	720	S	80	720	38	170
M	60/70	740/760	M	80	700/720	M	90	720	M	80	720	M	80	720	M	80	720	43	175
L	70/80	740/760	L	90	700/720	L	90	720	L	90	720	L	90	720	L	90	720	48	175
XL	70/90	740/760	XL	90	700/720	XL	100	720	XL	90	720	XL	90	720	XL	90	720	53	175

RACING+

PROJECT PHILOSOPHY

- Extreme rigidity for maximum power transmission
- Super reactive geometry for better handling and responsiveness
- Light weight

TARGET CONSUMER

- Those who want a pure speed machine with no compromises
- The rider who has a racing mindset and a competitive attitude

MODELS IN THIS CATEGORY:

/ **METHANOL CV FS**
/ **METHANOL CV RS**
/ **METHANOL CV S**

PERFORMANCE+

PROJECT PHILOSOPHY

- Stiffness/suppleness optimized ratio
- Reactive geometry for race-ready handling and responsiveness
- Reliability at still a light weight

TARGET CONSUMER

- Those who want a very versatile bike which can still be raced on
- Any sporty people who want a premium quality bike for every kind of riding

MODELS IN THIS CATEGORY:

/ **NITRON**

OFF-ROAD+

PROJECT PHILOSOPHY

- Comfortable bike for on and off road leisure riding
- Geometry optimized for a comfortable handling and riding position
- Ready for commute/trekking accessories

TARGET CONSUMER

- Those who want a very polivalent bike
- Any beginner or junior who wants a premium quality bike with a Pure Italian Design

MODEL IN THIS CATEGORY:

/ **MAGMA**
/ **DUEL**

XCO CROSS COUNTRY

METHANOL CV FS
METHANOL CV RS
METHANOL CV S
NITRON
MAGMA
DUEL

METHANOL CV FS

POSITIONING
Full suspension carbon bike with race pedigree.

COURSE/TERRAIN
Aggressive trail, cross-country and marathon races.

END USE DESTINATION
For professional and competitive riders looking for more control and great handling on technical descents and rock gardens.

KEY FEATURES
- Carbon frame engineered with Countervail®
- FS travel: 100mm
- FST travel: 120/100mm (Trail configuration)
- Geometry: Slacker HT°, Longer reach, Shorter CS
- Drivetrain: 1x only
- 29x2.4 tire compatible
- Boost 12x148TA rear axle
- Internal cable routing dropper post compatible
- Sizes: S, M, L, XL

LIGHTWEIGHT ●●●●●●●○○○
HANDLING ●●●●●●●●●●
COMFORT ●●●●●●●●●●
REACTIVITY ●●●●●●●●●●

GEOMETRY - RACING

METHANOL CV FS 29" Carbon - 100mm front travel

SIZE		A	B1	C	D	E	F	G	G1	H	I	X	Y	W
S	15"	410	570	435	50	90	669	75°	68.5°	44	506	407	588	1099
M	17"	440	600	435	50	100	700	75°	68.5°	44	506	435	597	1130
L	19"	480	626	435	50	110	726	75°	68.5°	44	506	458	606	1157
XL	21"	520	646	435	50	120	747	75°	68.5°	44	506	475	616	1178

METHANOL CV FST 29" Carbon - 120mm front travel

SIZE		A	B1	C	D	E	F	G	G1	H	I	X	Y	W
S	15"	410	573	435	42	90	666	74°	67.5°	44	526	397	595	1106
M	17"	440	602	435	42	100	706	74°	67.5°	44	526	425	604	1138
L	19"	480	628	435	42	110	733	74°	67.5°	44	526	448	614	1164
XL	21"	520	649	435	42	120	754	74°	67.5°	44	526	465	623	1185

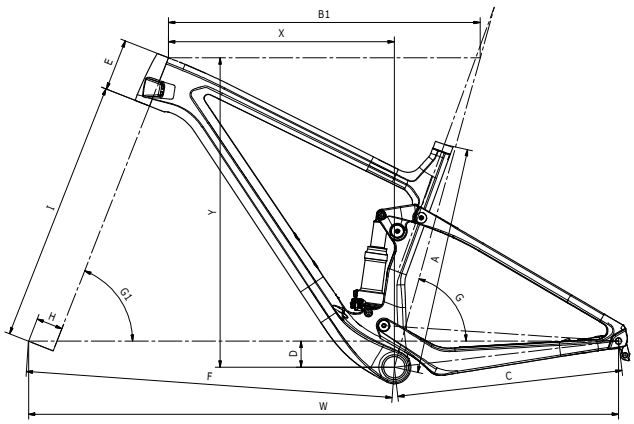

METHANOL 9.1 CV FS - XX1 EAGLE AXS 1X12SP

THE IMAGE SHOWN IS INDICATIVE ONLY. Components and graphic details may differ from the actual model.

CODE	YPBS7
COLOR	5G - Black/CK16 Full Glossy
FRAME	Methanol CV FS 100mm 29" full carbon HM monocoque w/Countervail, 1.5" tapered HT, BB92, only 1x drivetrain, PM 160mm carbon dropout, 12x148mm BOOST, internal cable routing, seatpost diam. 31,6mm, shock lenght/travel 190/40mm w/eyelets 20mm x diam.8mm, sizes 15-17-19-21"
BOLTS / HARDWARE	Carbon-Ti bolts AL7075-T6, large button head, Torx M5*14mm, w/Bianchi & Carbon-Ti logo (2pcs)
REAR SHOCK	Fox Float DPS Factory Kashima Remote, 190/40mm, SV, Evol, 2 position Remote
SEATPOST CLAMP	Alu, 35.4mm clamp
HEADSET	Fsa Orbit C-40, NO.42/ACB-A, 1.1/8"-1.5" w/4.3mm cap
FORK	Fox 32 SC 29" Factory Kashima Remote, 100mm travel, FIT4 2 position remote w/open mode adj, 1.5" Alu Tapered HT, Kabolt 15X110 axle, w/dual remote (fork+shock) for 1x drivetrain
SHIFTER	Sram XX1 Eagle AXS 12sp w/MatchMakerX
REAR DERAILLEUR	Sram XX1 Eagle AXS 12sp
CRANKSET	Sram XX1 Eagle AXS DUB 32T, carbon crank, 52mm chainline 148 BOOST compatible, 168mm Q- Factor, direct mount CNC-machined chainring, crank length: 170mm-15", 175mm-17/21"
BOTTOM BRACKET	Sram DUB PressFit BB92, 41x92mm
CHAIN	Sram PC-XX1 Eagle 12sp
CASSETTE / FREEWHEEL	Sram XG-1299 Eagle Rainbow, 10-12-14-16-18-21-24-28-32-36-42-50T
BRAKE	Sram Level Ultimate, aluminium caliper, carbon lever, 20mm bracket for front 180mm, w/left MatchMakerX clamp w/Flat Mount to PM160 adapter

DISC ROTOR	Sram Centerline X, diam front 180mm and rear 160mm, 2-pieces, 6 holes
RIM/WHEELSET	DT Swiss XR 1501 Spline 29" 25mm, thru axle front 15x110mm, rear 12x148mm, XD body, 6 bolts, TL-ready rims w/tubeless band and valve, straight pull spokes, 25mm inner width
TIRE	Kenda Booster Pro 29x2.20, Tubeless Race compound, 120Tpi, folding, ETRTO 56-622
STEM	Fsa K-Force Light OS-100 CSI, 3D forged/machined AL7050 w/AL2014/Carbon faceplate, +/-12∫, 1.1/8", diam 31.8mm, stack height 41mm, ext: 60mm-15", 70mm-17'', 80mm-19", 90mm-21"
HANDLEBAR	Fsa K-Force ICR flat, UD carbon/Kevlar composite, width 760mm, diam. 31.8mm, backsweep 9°, upsweep 4°
GRIP / TAPE	T-One T-GP43X, Silicone grips, length 130mm
SEATPOST	Fsa K-Force SB0 Di2 compatible, UD carbon monocoque w/2-bolts MTC head, diam. 31,6mm, 0mm seatback, length 350mm-15", 400mm-17/21"
SADDLE	Fi'zi:k Tundra M3, carbon braided rail, 290x125mm
BOTTLE CAGE	Elite Cannibal

IMPROVED TRAVEL

REAR SUSPENSION
100mm

FRONT TRAVEL
100/120mm

The trickiest root and rock sections will disappear below you. The Methanol CV FS isn't fazed by the biggest drops and roughest tracks.

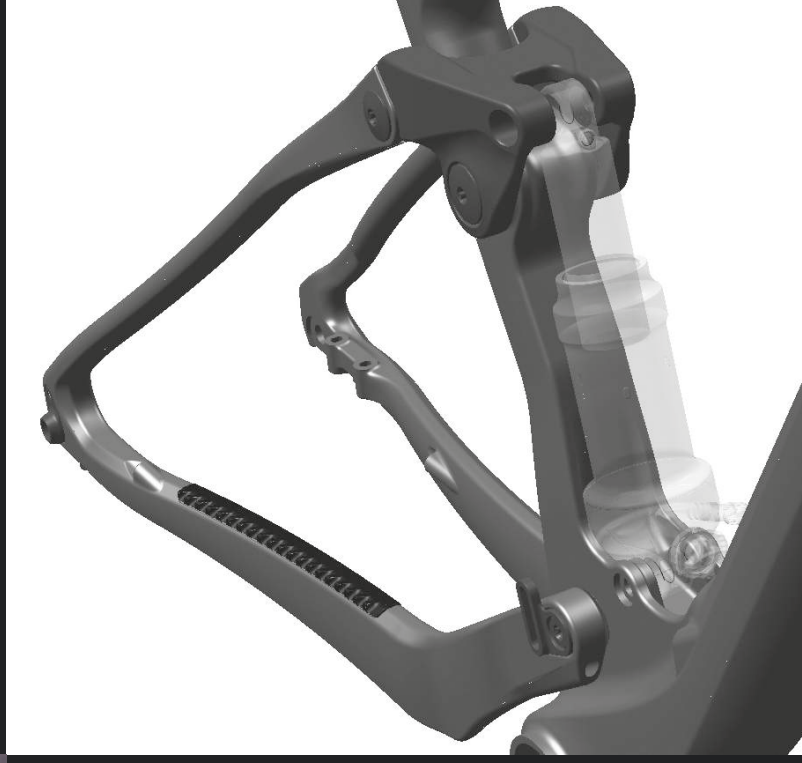

NEW CARBON FRAME

The all-new carbon frame is built exclusively for use with 1x drivetrains, so you can keep spec weight to a minimum, and it comes in 15", 17", 19" and 21" versions. As you'd expect with a competition-crushing race bike, the frame has internal cable routes and is dropper post-compatible. It runs up to 29x2.4" tyres and has a Boost 12x148TA rear axle.

TRAIL CONFIGURATION

The new Methanol CV FS comes available in two different Full Suspension Trail models. The frame is specced with a Fox 34 SC fork, DT Swiss M Series wheelset, dropper seatpost and 760mm width riser bar.

METHANOL 9.2 CV FS - XTR/XT 1X12SP

THE IMAGE SHOWN IS INDICATIVE ONLY. Components and graphic details may differ from the actual model.

CODE	YPBP6
COLOR	5G - Black/CK16 Full Glossy
FRAME	Methanol CV FS 100mm 29" full carbon HM monocoque w/Countervail, 1.5" tapered HT, BB92, only 1x drivetrain, PM 160mm carbon dropout, 12x148mm BOOST, internal cable routing, seatpost diam. 31,6mm, shock lenght/ travel 190/40mm w/eyelets 20mm x diam.8mm, sizes 15-17-19-21"
BOLTS / HARDWARE	Carbon-Ti bolts AL7075-T6, large button head, Torx M5*14mm, w/Bianchi & Carbon-Ti logo (2pcs)
REAR SHOCK	Fox Float DPS Performance Elite Remote, 190/40mm, SV, Evol, 2 position Remote
SEATPOST CLAMP	Alu, 35.4mm clamp
HEADSET	Fsa Orbit C-40, NO.42/ACB-A, 1.1/8"-1.5" w/4.3mm cap
FORK	Fox 32 SC 29" Performance remote, 100mm travel, GRIP 2 position remote, 1.5" Tapered HT, Kabolt 15x110mm axle, w/ dual remote (fork+shock) for 1x drivetrain
SHIFTER	Shimano XT SL- M8100R 12sp
REAR DERAILLEUR	Shimano XTR RD-M9100 SGS Shadow+ Design 12sp, top normal, direct attachment, max 10-51T
CRANKSET	Shimano XTR FC-M9100-1 34T, 162mm Q- Factor, 52mm chainline, crank length: 170mm-15", 175mm-17/21"
BOTTOM BRACKET	Shimano SM-BB94-41A for BB92
CHAIN	Shimano CN-M8100, 12sp
CASSETTE / FREEWHEEL	Shimano CS-M8100-12, 10-51T
BRAKE	Shimano XT BR-M8100, w/180mm front adapter and 160mm adapter Flat Mount to PM160, resin pad
DISC ROTOR	Shimano RT-64, diam. 180mm front and 160mm rear, Center Lock

RIM/WHEELSET	DT Swiss X1700 Spline two 29" 25mm, thru axle front 15x110mm, rear 12x148mm, Shimano 12sp freewheel body, TL-ready rims w/tubeless band and valve, straight pull spokes, Center Lock
TIRE	Kenda Booster Pro 29x2.20, Tubeless Race compound, 120Tpi, folding, ETRTO 56-622
STEM	Tec Cursus, 3D forged AL7050-T6 w/forged alloy faceplate,+/-7∫, 1.1/8", diam. 31.8mm, ext: 60mm-15'', 70mm-17", 80mm-19, 90mm-21"
HANDLEBAR	Tec Cursus flat, double butted AL2014-T6, width 740mm, diam. 31,8mm, 9° backsweep
GRIP / TAPE	T-One T-GP43X, Silicone grips, length 130mm
SEATPOST	Tec Cursus Carbon SB0, carbon UD fiber shaft w/forged head, diam. 31.6mm, 0mm seatback, length: 350mm-15'', 400mm-17/21"
SADDLE	Fi'zi:k Taiga, S-alloy rails
BOTTLE CAGE	Elite Cannibal
WATER BOTTLE	Elite Corsa 550ml, Team Replica

METHANOL 9.3 CV FS - XT/SLX 1X12SP

THE IMAGE SHOWN IS INDICATIVE ONLY. Components and graphic details may differ from the actual model.

CODE	YPBS9
COLOR	5G - Black/CK16 Full Glossy, ML - Black Metal/Silver Metal Full Glossy
FRAME	Methanol CV FS 100mm 29" full carbon HM monocoque w/Countervail, 1.5" tapered HT, BB92, only 1x drivetrain, PM 160mm carbon dropout, 12x148mm BOOST, internal cable routing, seatpost diam. 31,6mm, shock lenght/ travel 190/40mm w/eyelets 20mm x diam.8mm, sizes 15-17-19-21"
BOLTS / HARDWARE	Carbon-Ti bolts AL7075-T6, large button head, Torx M5*14mm, w/Bianchi & Carbon-Ti logo (2pcs)
REAR SHOCK	Fox Float DPS Performance Elite Remote, 190/40mm, SV, Evol, 2 position Remote
SEATPOST CLAMP	Alu, 35.4mm clamp
HEADSET	Fsa Orbit C-40, NO.42/ACB-A, 1.1/8"-1.5" w/4.3mm cap
FORK	Fox 32 Rhythm 29" remote, 100mm travel, GRIP 2 position remote, 1.5" Tapered HT, Kabolt 15x110mm axle, w/dual remote (fork+shock) for 1xdrivetrain
SHIFTER	Shimano SLX 12sp
REAR DERAILLEUR	Shimano XT RD-M8100-SGS Shadow Design + 12sp, top normal, direct attachment, max 10-51T
CRANKSET	Shimano FC-MT610 34T, 52mm chainline, crank length: 170mm-15", 175mm-17/21"
BOTTOM BRACKET	Sram DUB PressFit BB92 (41x92)
CHAIN	Shimano CN-M7100, 12sp
CASSETTE / FREEWHEEL	Shimano CS-M7100-12, 10-51T
BRAKE	Shimano BR-MT501, w/180mm front adapter and 160mm adapter Flat Mount to PM160, resin pad
DISC ROTOR	Shimano RT-54, diam. 180mm front and 160mm rear

FRONT HUB	Formula CL-811 for Center Lock, 32h, thru axle 15x110mm, sealed bearings
REAR HUB	Shimano FH-MT510-B, Center Lock, 32h, thru axle 12x148mm, Shimano 12sp freewheel body
RIM/WHEELSET	WTB KOM light i25 29", 32 holes, 622x25
TIRE	Kenda Booster Pro 29x2.20, Tubeless Race compound, 120Tpi, folding, ETRTO 56-622
STEM	Tec Cursus, 3D forged AL7050-T6 w/forged alloy faceplate, +/-7∫, 1.1/8", diam. 31.8mm, ext: 60mm-15", 70mm-17", 80mm-19", 90mm-21"
HANDLEBAR	Tec Cursus flat, double butted AL2014-T6, width 740mm, diam. 31,8mm, 9° backsweep
GRIP / TAPE	T-One T-GP43X, Silicone grips, length 130mm
SEATPOST	Tec Cursus Carbon SBO, carbon UD fiber shaft w/forged head, diam. 31.6mm, 0mm seatback, length: 350mm-15", 400mm-17/21"
SADDLE	Fi'zi:k Taiga, S-alloy rails
BOTTLE CAGE	Elite Paron composit
WATER BOTTLE	Bianchi Loli 600ml custom

METHANOL CV FS - KIT TELAIO

CODE	XPB59
COLOR	5G - Black/CK16 Full Glossy
FRAME	Methanol CV FS 100mm 29" full carbon HM monocoque w/Countervail, 1.5" tapered HT, BB92, only 1x drivetrain, PM 160mm carbon dropout, 12x148mm BOOST, internal cable routing, seatpost diam. 31,6mm, shock lenght/travel 190/40mm w/eyelets 20mm x diam.8mm, sizes 15-17-19-21"
BOLTS / HARDWARE	Carbon-Ti bolts AL7075-T6, large button head, Torx M5*14mm, w/Bianchi & Carbon-Ti logo (2pcs)
REAR SHOCK	Fox Float DPS Factory Kashima Remote, 190/40mm, SV, Evol, 2 position Remote
SEATPOST CLAMP	Alu, 35.4mm clamp
HEADSET	Fsa Orbit C-40, NO.42/ACB-A, 1.1/8"-1.5" w/4.3mm cap

METHANOL 9.1 CV FST - XTR 1X12SP

THE IMAGE SHOWN IS INDICATIVE ONLY. Components and graphic details may differ from the actual model.

CODE	YPBS1
COLOR	5G - Black/CK16 Full Glossy
FRAME	Methanol CV FS 100mm 29" full carbon HM monocoque w/Countervail, 1.5" tapered HT, BB92, only 1x drivetrain, PM 160mm carbon dropout, 12x148mm BOOST, internal cable routing, seatpost diam. 31,6mm, shock lenght/ travel 190/40mm w/eyelets 20mm x diam.8mm, sizes 15-17-19-21"
BOLTS / HARDWARE	Carbon-Ti bolts AL7075-T6, large button head, Torx M5*14mm, w/Bianchi & Carbon-Ti logo (2pcs)
REAR SHOCK	Fox Float DPS Factory Kashima Remote, 190/40mm, SV, Evol, 2 position Remote
SEATPOST CLAMP	Alu, 35.4mm clamp
HEADSET	Fsa Orbit C-40, NO.42/ACB-A, 1.1/8"-1.5" w/4.3mm cap
FORK	Fox 34 SC 29" Factory Kashima remote, 120mm travel, FIT4 2 position remote w/open mode adj, 1.5" ALU Tapered HT, Kabolt 15x110mm axle, w/dual remote (fork+shock) for 1x drivetrain
SHIFTER	Shimano XTR SL- M9100IR 12sp
REAR DERAILLEUR	Shimano XTR RD-M9100 SGS Shadow+ Design 12sp, top normal, direct attachment, max 10-51T
CRANKSET	Shimano XTR FC-M9100-1 34T, 162mm Q-Factor, 52mm chainline, crank length: 170mm-15", 175mm-17/21"
BOTTOM BRACKET	Shimano SM-BB94-41A for BB92
CHAIN	Shimano CN-M8100, 12sp
CASSETTE / FREEWHEEL	Shimano CS-M8100-12, 10-51T
BRAKE	Shimano XTR BR-M9100, w/180mm front adapter and 160mm adapter Flat Mount to PM160, resin pad
DISC ROTOR	Shimano RT-MT800, diam. 180mm front and 160mm rear, Center Lock w/Ice Tech
RIM/WHEELSET	DT Swiss XM1501 Spline 29" 25mm, thru axle front 15x110mm, rear 12x148mm, Shimano 12sp freewheel body, Center Lock, TL-ready rims w/tubeless band and valve, straight pull spokes, 25mm inner width
TIRE	Kenda Nevegal2 Pro 29x2.20, ATC, 120Tpi, folding, ETRTO 60-622
STEM	Fsa SL-K 3D forged and CNC AL2014, 1.1/8", +/-6°, diam. 31.8mm, stack height 40mm, ext: 60mm-15/17", 70mm-19/21"
HANDLEBAR	Fsa SL-K Low Riser, AL6066 w/carbon wrap, diam. 31.8mm, 9° backsweep, 4° upsweep, rise 15mm
GRIP / TAPE	T-One Rock T-GP34 single lock grip , TPR, plastic inner body, aluminium clamp
SEATPOST	Fox Transfer Factory, diam. 31,6mm, internal cable routing, travel: 100mm-15", 125mm-17/21"
SADDLE	Fi'zi:k Taiga, S-alloy rails
BOTTLE CAGE	Elite Cannibal
WATER BOTTLE	Elite Corsa 550ml, Team Replica

METHANOL 9.2 CV FST - XT 1X12V

THE IMAGE SHOWN IS INDICATIVE ONLY. Components and graphic details may differ from the actual model.

CODICE	YPBS2
COLORE	5G - Nero/CK16 lucido
TELAIO	Methanol CV FS 100mm 29" full carbon HM monoscocca c/Countervail, sterzo conico 1.5", BB92, solo trasmissioni 1x, PM 160mm forcellini carbonio, 12x148mm BOOST, passaggio cavi interno, diam. reggisella 31,6mm, lungh./corsa ammo 190/40mm c/occhielli 20mm x diam.8mm, misure 15-17-19-21"
VITI	Carbon-Ti in AL7075-T6, testa larga, Torx M5*14mm, c/loghi Bianchi & Carbon-Ti(2pezzi)
AMMORTIZZATORE	Fox Float DPS Performance Elite Remote, 190/40mm, SV, Evol, comando remoto 2 posizioni
COLLARINO REGGISELLA	Alu, collarino 35.4mm
SERIE STERZO	Fsa Orbit C-40, NO.42/ACB-A, 1.1/8"-1.5" c/cap 4.3mm
FORCELLA	Fox 34 SC 29"Performance remote, corsa 120mm, Grip comando remoto 2 posizioni c/regolaz open mode, tubo sterzo conico alu 1.5", asse Kabolt 15x110mm, c/comando remoto dual (forcella+ammo) per trasmissioni 1x
COMANDI	Shimano XT SL- M8100R 12v
CAMBIO	Shimano XT RD-M8100-SGS Shadow Design + 12v, top normal, attacco diretto, max 10-51T
GUARNITURA	Shimano XT FC-M8100-1 32T, linea catena 52mm, crank length: 170mm-15", 175mm-17/21"
MOVIMENTO CENTRALE	Sram DUB PressFit BB92 (41x92)
CATENA	Shimano CN-M7100, 12v
PIGNONI	Shimano CS-M8100-12, 10-51T
FRENI	Shimano XT BR-M8100, c/adattatore ant. 180mm e adatattore 160mm da Flat Mount a PM160, pastiglie resina

DISCHI	Shimano RT-64, diam. 180mm ant. e 160mm post., Center Lock
CERCHI/RUOTE	DT Swiss M1700 Spline two 29" 25mm, asse passante ant. 15x110mm, post. 12x148mm, corpo ruotalibera Shimano 12v, cerchi TL-ready c/nastro tubeless e valvola, raggi straight pull, Center Lock
COPERTURE	Kenda Nevegal2 Pro 29x2.20, ATC, 120Tpi, pieghevole, ETRTO 60-622
ATTACCO MANUBRIO	Tec Cursus, AL7050-T6 forgiato 3D c/frontalino lega forgiata, +/-7∫, 1.1/8", diam. 31.8mm, lungh:60mm-15/17", 70mm-19/21"
MANUBRIO	Tec Cursus rise, AL2014-T6 doppio spessore, largh 760mm, diam. 31,8mm, rise 15mm, backsweep 9°
MANOPOLE / NASTRO	T-One Rock T-GP34 con collarino in lega, TPR, corpo interno in plastica
REGGISELLA	Reggisella telescopico diam.31,6mm, passaggio cavi interno c/comando remoto specifico trasmissioni 1x, corsa: 100mm-15", 125mm-17/21"
SELLA	Fi'zi:k Taiga, forchetta S-alloy
PORTABORRACCIA	Elite Cannibal
BORRACCIA	Elite Corsa 550ml, Team Replica

METHANOL CV RS

POSITIONING
XCO racing machine engineered with Countervail carbon material to tame the trail faster, more smoothly, in greater control and with more energy to attack and hold more aggressive lines.

COURSE/TERRAIN
Fast modern XCO races and technical XCM events.

END USE DESTINATION
For professional racers and expert riders looking for a fast, light and aggressive bike.

KEY FEATURES
- Full carbon frame engineered with Countervail®
- 12x148mm Boost thru axle
- Di2 compatible, dropper seatpost compatible w/ internal cable routing
- Geometry w/longer reach and slacker HT angle
- Weight 940g (+/-5%, size 17", MN color)
- 4 sizes available: S, M, L, XL
- Tavolozza on-line color configurator

LIGHTWEIGHT ●●●●●●●●●●
HANDLING ●●●●●●●●●●
COMFORT ●●●●●●●●●○
REACTIVITY ●●●●●●●●●●

GEOMETRY - RACING

MIS

		A	B1	C	D	E	F	G	G1	H	I	X	Y	WB
S	15"	380	575	430	60	90	660	74°	69.5°	51	504	401	599	1084
M	17"	430	600	430	60	100	685	74°	69.5°	51	504	423	609	1109
L	19"	470	625	430	60	110	710	74°	69.5°	51	504	445	618	1134
XL	21"	520	650	430	60	120	736	74°	69.5°	51	504	467	627	1160

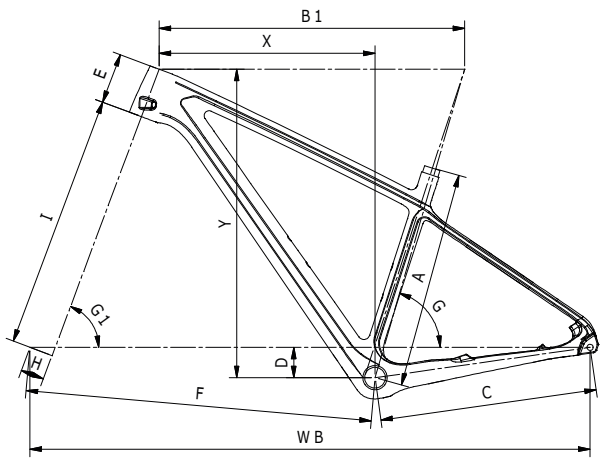

CLEARANCE

Improved clearance in the chainstays allows to accomodate larger tyres up to 58mm width in wet, muddy conditions.

LARGER TYRES UP TO **58mm**

DRIVETRAIN

THE METHANOL CV RS IS NOW 1X DRIVETRAIN SPECIFIC.

XCO RACING GEOMETRY

The frame shape and structure saves weight, improves steering response and accuracy. Geometry has been optimized to respond to the new faster, rougher race tracks by adding a longer reach and a slacker head tube angle. This creates a more confident feel for the rider at speed and a greater ability to attack the trail, especially in corners and steep descents.

METHANOL 9.1 CV RS - XX1 EAGLE AXS 1X12SP

CODE	YPB73
COLOR	2A - CK16/Black Full Glossy, Tavolozza
FRAME	Methanol CV RS 29" full carbon w/Countervail, high modulus monocoque, 1.5" tapered HT, Pressfit BB92 (41x92), 1x drivetrains only, 27,2mm seatpost, PM 160mm carbon dropout 12x148 BOOST, internal cable routing Di2 compatible, sizes 15,17,19,21"
BOLTS / HARDWARE	Carbon-Ti bolts AL7075-T6, large button head, Torx M5*14mm (15"> 2 pcs-17,19,21">4pcs), w/Bianchi & Carbon-Ti logo
SEATPOST CLAMP	diam. 31,8mm
HEADSET	Fsa Orbit C-40, NO.42/ACB-A, 1.1/8"-1.5" w/4.3mm cap
FORK	Fox 32 SC 29" Factory Kashima remote, 100mm travel, FIT4 2 position remote w/open mode adj, 1.5" ALU Tapered HT, Kabolt 15x110mm axle, w/remote for 1x drivetrain
SHIFTER	Sram XX1 Eagle AXS 12sp w/MatchmakerX
REAR DERAILLEUR	Sram XX1 Eagle AXS 12sp
CRANKSET	Sram XX1 Eagle AXS DUB 32T, carbon crank, 52mm chainline 148 BOOST compatible, 168mm Q- Factor, direct mount CNC-machined chainring, crank length: 170mm-15", 175mm-17/21"
BOTTOM BRACKET	Sram DUB PressFit BB92, 41x92mm
CHAIN	Sram PC-XX1 Eagle 12sp
CASSETTE / FREEWHEEL	Sram XG-1299 Eagle Rainbow 10-12-14-16-18-21-24-28-32-36-42-50T

BRAKE	Sram Level Ultimate, aluminium calipers, carbon levers, w/180mm front adapter, w/MatchMakerX clamp
DISC ROTOR	Sram Centerline X, diam front 180mm and rear 160mm, 2-pieces, 6 holes
RIM/WHEELSET	DT Swiss XR1501 Spline 29" 25mm, thru axle front 15x110mm, rear 12x148mm, XD freewheel body, 6-BOLTS, TL-ready rim w/tubeless band and valve, straight pull spokes, 25mm inner width
TIRE	Kenda Booster Pro 29x2.20, Tubeless Race compound, 120Tpi, folding, ETRTO 56-622
STEM	Fsa K-Force Light OS-100 CSI,3D forged/machined AL7050 w/AL2014/Carbon faceplate, +/-12∫, 1.1/8", 31.8mm, stack height 41mm, ext: 70mm-15", 80mm-17", 90mm-19/21"
HANDLEBAR	Fsa K-Force ICR Light flat, carbon/Kevlar composite, width 700mm, diam. 31.8mm, 9° backsweep, 4° upsweep
GRIP / TAPE	T-One T-GP43X, Silicone grips, length 130mm
SEATPOST	Fsa K-Force SBO UD carbon monocoque w/2-bolts MTC head, diam. 27.2mm, 0mm seatback, Di2 compatible , length 350mm-15", 400mm-17/21"
SADDLE	Fi'zi:k Tundra M3, carbon braided rail, 290x125mm
BOTTLE CAGE	Elite Cannibal
WATER BOTTLE	Elite Corsa 550ml, Team Replica

METHANOL 9.2 CV RS - XTR 1X12SP

CODE	YPB74
COLOR	2A - CK/Black Full Glossy, Tavolozza
FRAME	Methanol CV RS 29" full carbon w/Countervail, high modulus monocoque, 1.5" tapered HT, Pressfit BB92 (41x92), 1x drivetrains only, 27,2mm seatpost, PM 160mm carbon dropout 12x148 BOOST, internal cable routing Di2 compatible, sizes 15,17,19,21"
BOLTS / HARDWARE	Carbon-Ti bolts AL7075-T6, large button head, Torx M5*14mm (15"> 2 pcs-17,19,21">4pcs), w/Bianchi & Carbon-Ti logo
SEATPOST CLAMP	diam. 31,8mm
HEADSET	Fsa Orbit C-40, NO.42/ACB-A, 1.1/8"-1.5" w/4.3mm cap
FORK	Fox 32 SC 29" Factory Kashima remote, 100mm travel, FIT4 2 position remote w/open mode adj, 1.5" Alu Tapered HT, Kabolt 15x110mm axle, w/remote for 1x drivetrain
SHIFTER	Shimano XTR SL- M9100IR 1x12sp
REAR DERAILLEUR	Shimano XTR RD-M9100SGS Shadow+ Design 12sp, top normal, direct attachment, max 10-51T
CRANKSET	Shimano XTR FC-M9100-1 34T, 162mm Q- Factor, 52mm chainline, crank length: 170mm-15", 175mm-17/21"
BOTTOM BRACKET	Shimano SM-BB94-41A for BB92
CHAIN	Shimano CN-M9100, 12sp
CASSETTE / FREEWHEEL	Shimano CS-M9100-12, 10-12-14-16-18-21-24-28-33-39-45-51T
BRAKE	Shimano XTR M9100, w/180mm front adapter, resin pad
DISC ROTOR	Shimano RT-MT900 diam. front 180mm and rear 160mm, Center Lock w/IceTech

RIM/WHEELSET	DT Swiss XR1501 Spline 29" 25mm, thru axle front 15x110mm, rear 12x148mm, Shimano 12sp freewheel body, Center Lock, TL-ready rim w/tubeless band and valve, straight pull spokes, 25mm inner width
TIRE	Kenda Booster Pro 29x2.20, Tubeless Race compound, 120Tpi, folding, ETRTO 56-622
STEM	Fsa SL-K, 3D Forged/CNC AL2014 w/UD Carbon faceplate, +/-12∫, 1.1/8", diam 31.8mm, stack height 34mm, ext: 70mm-15", 80mm-17", 90mm-19/21"
GRIP / TAPE	T-One T-GP43X, Silicone grips, length 130mm
SEATPOST	SL-K SB0, UD Carbon shaft w/alloy MTC head. diam. 27,2mm, 0mm seatback, length: 350mm-15", 400mm-17/21"
SADDLE	Fi'zi:k Taiga, S-alloy rails
BOTTLE CAGE	Elite Paron composit
WATER BOTTLE	Elite Corsa 550ml, Team Replica

METHANOL 9.3 CV RS - X01 EAGLE 1X12SP

CODE	YPBR1
COLOR	2A - CK16/Black Full Glossy, MN- Carbon UD/CK16 Decals, Tavolozza
FRAME	Methanol CV RS 29" full carbon w/Countervail, high modulus monocoque, 1.5" tapered HT, Pressfit BB92 (41x92), 1x drivetrains only, 27,2mm seatpost, PM 160mm carbon dropout 12x148 BOOST, internal cable routing Di2 compatible, sizes 15,17,19,21"
BOLTS / HARDWARE	Carbon-Ti bolts AL7075-T6, large button head, Torx M5*14mm (15''> 2 pcs-17,19,21">4pcs), w/Bianchi & Carbon-Ti logo
SEATPOST CLAMP	diam. 31,8mm
HEADSET	Fsa Orbit C-40, NO.42/ACB-A, 1.1/8"-1.5" w/4.3mm cap
FORK	Fox 32 SC 29" Performance remote, 100mm travel, GRIP 2 position remote, 1.5" Tapered HT, Kabolt 15x110mm axle, w/remote for 1x drivetrain
SHIFTER	Sram X01 Eagle 1x12sp trigger w/discrete clamp
REAR DERAILLEUR	Sram X01 Eagle 12sp, long cage
CRANKSET	Sram X1 Carbon DUB 32T, carbon cranks, Direct Mount alu chainring, 52mm chainline BOOST compatible, crank length: 170mm-15", 175mm-17/21"
BOTTOM BRACKET	Sram DUB PressFit BB92, 41x92mm
CHAIN	Sram GX Eagle 12sp
CASSETTE / FREEWHEEL	Sram XG-1275 12sp, 10-12-14-16-18-21-24-28-32-36-42-50T
BRAKE	Shimano XT M8100, w/180mm front adapter, resin pad
DISC ROTOR	Shimano RT-76, 6 bolts type, 180mm front and 160mm rear

RIM/WHEELSET	Crankbrothers Cobalt 2 29, thru axle front 15x110mm, rear 12x148mm, XD body, 23mm alu UST tubeless rims
TIRE	Kenda Booster Pro 29x2.20, Tubeless Race compound, 120Tpi, folding, ETRTO 56-622
STEM	Tec Cursus 3D forged AL7050-T6, +/-7∫, 1.1/8", 31.8mm, ext: 70mm-15", 80mm-17", 90mm-19/21"
HANDLEBAR	Tec Cursus flat, double butted AL2014-T6, width 720mm, diam. 31,8mm, backsweep 9°
GRIP / TAPE	T-One T-GP43X, Silicone grips, length 130mm
SEATPOST	Tec Cursus Carbon SB0, UD carbon shaft with forged head, diam. 27.2mm, 0mm seatback, length 350mm-15", 400mm-17/21"
SADDLE	Fi'zi:k Taiga, S-alloy rails
BOTTLE CAGE	Elite Paron composit
WATER BOTTLE	Bianchi Loli 600ml custom

METHANOL CV RS - FRAME KIT

CODE	XPB58
COLOR	2A-CK/Black full glossy, MN-Carbon UD/CK16 Decals, Tavolozza
FRAME	Methanol CV RS 29" full carbon w/Countervail, high modulus monocoque, 1.5" tapered HT, Pressfit BB92 (41x92), 1x drivetrains only, 27,2mm seatpost, PM 160mm carbon dropout 12x148 BOOST, internal cable routing Di2 compatible, sizes 15,17,19,21"
BOLTS / HARDWARE	Carbon-Ti bolts AL7075-T6, large button head, Torx M5*14mm (15"> 2 pcs-17,19,21">4pcs), w/Bianchi & Carbon-Ti logo
SEATPOST CLAMP	diam. 31,8mm
HEADSET	Fsa Orbit C-40, NO.42/ACB-A, 1.1/8"-1.5" w/4.3mm cap

Bianchi
FOX

METHANOL CV S

POSITIONING
With Methanol CV S, Bianchi extends the availability of the world-famous Methanol frame platform, engineered with Bianchi CV System.

COURSE/TERRAIN
Fast modern XCO races and technical XCM events.

END USE DESTINATION
Methanol CV RS is dedicated to performing riders looking for an aggressive race-ready model.

KEY FEATURES
- Full carbon frame engineered with Countervail®
- 12x148mm Boost thru axle
- Di2 compatible, dropper seatpost compatible w/ internal cable routing
- 2x drivetrain compatible
- 4 sizes available : S, M, L, XL

LIGHTWEIGHT ●●●●●●●●●○
HANDLING ●●●●●●●●●●
COMFORT ●●●●●●●●●○
RACTIVITY ●●●●●●●●●●

GEOMETRY - RACING

SIZE		A	B1	C	D	E	F	G	G1	H	I	X	Y	WB
S	15"	380	575	430	60	90	645	74°	71°	46	500	395	601	1067
M	17"	430	580	430	60	100	654	74°	71°	46	500	410	615	1077
L	19"	470	615	430	60	110	679	74°	71°	46	500	433	625	1102
XL	21"	520	635	430	60	120	699	74°	71°	46	500	450	635	1122

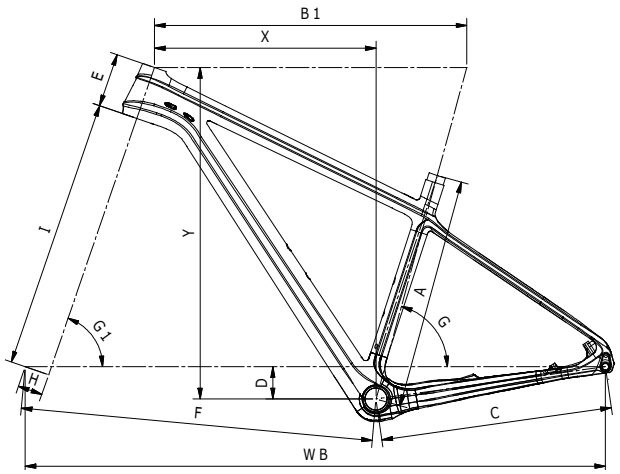

METHANOL 9.1 CV S - X0/GX EAGLE 1X12SP

THE IMAGE SHOWN IS INDICATIVE ONLY. Components and graphic details may differ from the actual model.

CODE	YPBI2
COLOR	2A - CK/Black full glossy
FRAME	Methanol CV S 29" carbon HM monocoque w/Countervail, 1.5" tapered HT, Pressfit BB92 (41x92mm), HDM FD, bottom pull, 27.2mm seatpost, PM 160mm carbon dropout 12x148mm BOOST Shimano thru axle, internal cable routing Di2 compatible, sizes 15,17,19,21"
BOLTS / HARDWARE	Carbon-Ti bolts AL7075-T6, large button head, Torx M5*14mm (15''> 2 pcs-17,19,21">4pcs), w/Bianchi & Carbon-Ti logo
SEATPOST CLAMP	diam. 31,8mm
HEADSET	Fsa Orbit C-40, NO.42/ACB-A, 1.1/8"-1.5" w/4.3mm cap
FORK	Fox 32 SC 29" Performance remote, 100mm travel, GRIP 2 position remote, 1.5" Tapered HT, Kabolt 15x110mm axle, w/remote for 1x drivetrain
SHIFTER	Sram GX Eagle 1x12sp trigger
REAR DERAILLEUR	Sram X01 Eagle 12sp, long cage
CRANKSET	Sram GX Eagle DUB 32T, 7000 alu series cranks, Direct Mount chainring, 52mm chainline BOOST compatible, crank length: 170mm-15", 175mm-17/21"
BOTTOM BRACKET	Sram DUB PressFit BB92, 41x92mm
CHAIN	Sram GX Eagle 12sp
CASSETTE / FREEWHEEL	Sram XG-1275 12sp, 10-12-14-16-18-21-24-28-32-36-42-50T
BRAKE	Shimano XT M8100, w/180mm front adapter, resin pad
DISC ROTOR	Shimano RT-66, 6 bolts type, F:180mm & R:160mm
RIM/WHEELSET	Crankbrothers Cobalt 1 29, thru axle front 15x110mm, rear 12x148mm, XD body, 21mm alu UST tubeless rims

TIRE	Kenda Booster Pro 29x2.20, Tubeless Race compound, 120Tpi, folding, ETRTO 56-622
STEM	Tec Cursus 3D forged AL7050-T6, +/-7∫, 1.1/8", 31.8mm, ext: 70mm-15", 80mm-17", 90mm-19/21"
HANDLEBAR	Tec Cursus flat, double butted AL2014-T6, width 720mm, diam. 31,8mm, backsweep 9°
GRIP / TAPE	T-One T-GP43X, Silicone grips, length 130mm
SEATPOST	Tec Cursus Carbon SBO, UD carbon shaft with forged head, diam. 27.2mm, 0mm seatback, length 350mm-15", 400mm-17/21"
SADDLE	Fi'zi:k Taiga, S-alloy rails
BOTTLE CAGE	Elite Paron composit
WATER BOTTLE	Bianchi Loli 600ml custom

METHANOL 9.2 CV S - XT 1X12SP

THE IMAGE SHOWN IS INDICATIVE ONLY. Components and graphic details may differ from the actual model.

CODE	YPB64
COLOR	2A - CK/Black full glossy
FRAME	Methanol CV S 29" carbon HM monocoque w/Countervail, 1.5" tapered HT, Pressfit BB92 (41x92mm), HDM FD, bottom pull, 27.2mm seatpost, PM 160mm carbon dropout 12x148mm BOOST Shimano thru axle, internal cable routing Di2 compatible, sizes 15,17,19,21"
BOLTS / HARDWARE	Carbon-Ti bolts AL7075-T6, large button head, Torx M5*14mm (15"> 2 pcs-17,19,21">4pcs), w/Bianchi & Carbon-Ti logo
SEATPOST CLAMP	diam. 31,8mm
HEADSET	Fsa Orbit C-40, NO.42/ACB-A, 1.1/8"-1.5" w/4.3mm cap
FORK	Rock Shox SID SELECT 29" Solo Air 100mm w/OneLoc remote, 1.5 alu HT, 15x110mm Maxle Stealth, 32mm stanchions, magnesium lowers, PM 160mm disc mount
SHIFTER	Shimano XT SL- M8100R 12sp
REAR DERAILLEUR	Shimano XT RD-M8100-SGS Shadow Design + 12sp, top normal, direct attachment, max 10-51T
CRANKSET	Shimano XT FC-M8100-1, 32T, 52mm Chainline, crank length: 170mm-15", 175mm-17/21"
BOTTOM BRACKET	Sram DUB PressFit BB92 (41x92)
CHAIN	Shimano CN-M7100 12sp
CASSETTE / FREEWHEEL	Shimano CS-M7100-12, 10-51T
BRAKE	Shimano XT M8100, w/180mm front adapter, resin pad
DISC ROTOR	Shimano SM-RT54 CL, diam. 180mm front & 160mm rear, Center Lock
RIM/WHEELSET	Fulcrum Red Zone 700 29 AFS, thru axle front 15x110mm, rear 12x148mm, Shimano Microspline 12sp Body

TIRE	Kenda Booster Pro 29x2.20, Tubeless Race compound, 120Tpi, folding, ETRTO 56-622
STEM	Tec Cursus 3D forged AL7050-T6, +/-7∫, 1.1/8", 31.8mm, ext: 70mm-15", 80mm-17", 90mm-19/21"
HANDLEBAR	Tec Cursus flat, double butted AL2014-T6, width 720mm, diam. 31,8mm, backsweep 9°
GRIP / TAPE	T-One T-GP43X, Silicone grips, length 130mm
SEATPOST	Tec Cursus Carbon SBO, UD carbon shaft with forged head, diam. 27.2mm, 0mm seatback, length 350mm-15", 400mm-17/21"
SADDLE	Fi'zi:k Taiga, S-alloy rails
BOTTLE CAGE	Elite Paron composit
WATER BOTTLE	Bianchi Loli 600ml custom

NITRON

POSITIONING
Race ready carbon 29er platform with the DNA of the worldwide winning Methanol line.

COURSE/TERRAIN
XCO/XCM events.

END USE DESTINATION
For expert riders looking for a race oriented bike with top model features and best performance/price ratio.

KEY FEATURES
- Full carbon frame
- Race ready 29" geometry w/4 sizes available (S, M, L, XL)
- 12x148mm Boost thru axle
- Internal cable routing for dropper seatpost compatible, Shimano side-swing FD compatible
- 429mm chain stay length

LIGHTWEIGHT ●●●●●●●○○○
HANDILNG ●●●●●●●●●●
COMFORT ●●●●●●●○○○
REACTIVITY ●●●●●●●●●○

GEOMETRY - PERFORMANCE

SIZE		AB	1B	SC		DE		GG	1Y		XW	
S	15"	380	570	557	429	60	90	74°	69.5°	601	397	1079
M	17"	430	600	574	429	60	100	74°	69.5°	611	424	1110
L	19"	480	625	598	429	60	110	74°	69.5°	620	447	1135
XL	21"	530	645	619	429	60	120	74°	69.5°	629	464	1156

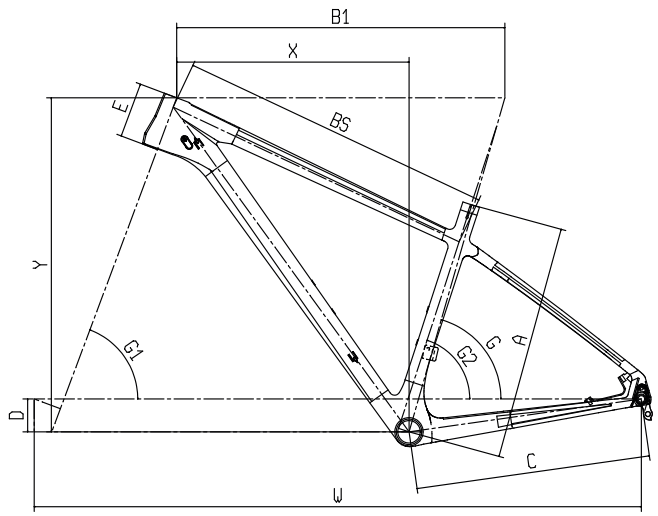

EQUIPPED FOR SPEED

Fork with matched graphics add style and lightweight pro-level bump taming performance. With 100mm of travel and a remote lockout switch, the Nitron is ready to descend fast on trails.

PRECISION COMPONENTS

The Nitron features ultra-reliable race ready drivetrain components. The versatile component specification includes internal routing for the 2x Shimano side-swing front derailleur. Choose to run it 1x or 2x according to your preferences; you'll never miss a gear.

SUBLIME RIDER CONTROL

Constructed using our advanced carbon fibre lay-up technology, the Nitron frame uses highly-tuned tube profiles, from the head tube to the dropouts. Achieving an outstanding stiffness to weight ratio, pinpoint steering and sublime levels of rider comfort for long hours in the saddle and available in four sizes 15, 17, 19 and 21 inches. Every rider can achieve a perfect fit. BB92 bottom bracket, tapered head tube, Boost 148 standard and 429mm short chainstays work together to create a direct pedalling platform and achieve the best power transfer.

NITRON 9.1 - GX EAGLE 1X12SP

CODE	YPBP7
COLOR	6U - CK16/Black-Red Full Glossy
FRAME	Nitron 29" full carbon monocoque, 1.5" tapered HT, BB92, seatpost diam. 27,2mm, HDM FD, PM 160mm carbon dropout 12x148mm BOOST Thru axle, internal cable routing, sizes 15-17-19-21"
SEATPOST CLAMP	MX-112C diam. 31,8mm
HEADSET	Fsa Orbit C-40, NO.42/ACB-A, 1.1/8"-1.5" w/4.3mm cap
FORK	Fox 32 SC 29" Performance remote, 100mm travel, GRIP 2 position remote, 1.5" Tapered HT, 15x110mm axle, w/ remote for 1x drivetrain
SHIFTER	Sram GX Eagle 1x12sp trigger w/discrete clamp
REAR DERAILLEUR	Sram GX Eagle 12sp long cage carbon Type2.1
CRANKSET	Sram GX Eagle DUB 32T, AL7000 series cranks, Direct Mount chainring, 52mm chainline BOOST compatible, crank length: 170mm-15", 175mm-17/21"
BOTTOM BRACKET	Sram DUB PressFit BB92, 41x92mm
CHAIN	Sram GX Eagle 12sp
CASSETTE / FREEWHEEL	Sram XG-1275 12sp, 10-12-14-16-18-21-24-28-32-36-42-50T
BRAKE	Shimano BR-MT501, w/180mm front adapter, resin pad, I-SPEC II compatible
DISC ROTOR	Shimano SM-RT54 CL, diam. 180mm front & 160mm rear, Center Lock, for resin pad only
FRONT HUB	Formula CL-811 for Center Lock, 32h, thru axle 15x110mm, sealed bearings
REAR HUB	Formula CL-1481 for Center Lock, 32h, 12X148mm OLD, XD body, 4 sealed bearings, j-bend spokes

RIM/WHEELSET	WTB KOM light i25 29", 32 holes, 622x25
TIRE	Kenda Booster Pro 29x2.20, Tubeless Race compound, 120Tpi, folding, ETRTO 56-622
STEM	Tec Cursus 3D forged AL7050-T6, +/-7∫, 1.1/8", 31.8mm, ext: 70mm-15", 80mm-17", 90mm-19/21"
HANDLEBAR	Tec Cursus flat, double butted AL2014-T6, width 720mm, diam. 31,8mm, backsweep 9°
GRIP / TAPE	T-One Rock T-GP34 single lock grip , TPR, plastic inner body, aluminium clamp
SEATPOST	Tec Obvius, AL6061 shaft with forged head, diam. 27.2mm, 0mm seatback, length 350mm-15", 400mm-17/21"
SADDLE	Selle Royal Seta S1, manganese rail, 277x144mm

NITRON 9.2 - XT/SLX 1X12SP

CODE	YPBP4
COLOR	6U - CK16/Black-Red Full Glossy
FRAME	Nitron 29" full carbon monocoque, 1.5" tapered HT, BB92, seatpost diam. 27,2mm, HDM FD, PM 160mm carbon dropout 12x148mm BOOST Thru axle, internal cable routing, sizes 15-17-19-21"
SEATPOST CLAMP	MX-112C diam. 31,8mm
HEADSET	Fsa Orbit C-40, NO.42/ACB-A, 1.1/8"-1.5" w/4.3mm cap
FORK	Rock Shox SID SELECT 29" Solo Air 100mm w/OneLoc remote, 1.5 alu HT, 15x110mm Maxle Stealth, 32mm stanchions, magnesium lowers, PM 160mm disc mount
SHIFTER	Shimano SLX 1x12sp
REAR DERAILLEUR	Shimano XT RD-M8100-SGS Shadow Design + 12sp, top normal, direct attachment, max 10-51T
CRANKSET	Shimano XT FC-M8100-1, 32T, 52mm chainline, crank length: 170mm-15", 175mm-17/21"
BOTTOM BRACKET	Sram DUB PressFit BB92 (41x92)
CHAIN	Shimano CN-M7100 12sp
CASSETTE / FREEWHEEL	Shimano CS-M7100-12, 10-51T
BRAKE	Shimano BR-MT501, w/180mm front adapter, resin pad, I-SPEC II compatible
DISC ROTOR	Shimano SM-RT54 CL, diam. 180mm front & 160mm rear, Center Lock, for resin pad only
FRONT HUB	Formula CL-811 for Center Lock, 32h, thru axle 15x110mm, sealed bearings
REAR HUB	Shimano FH-MT510-B, Center Lock, 32h, thru axle 12x148mm, Shimano 12sp freewheel body
RIM/WHEELSET	WTB KOM light i25 29", 32 holes, 622x25

TIRE	Kenda Booster Pro 29x2.20, Tubeless Race compound, 120Tpi, folding, ETRTO 56-622
STEM	Tec Obvius 3D forged alloy 6061, +/-7°, 1.1/8", diam. 31.8mm, ext: 70mm-15", 80mm-17", 90mm-19/21"
HANDLEBAR	Tec Obvius flat DB Alloy 6061-T6, width 720mm, diam. 31,8mm, 9° backsweep
GRIP / TAPE	T-One Rock T-GP34 single lock grip , TPR, plastic inner body, aluminium clamp
SEATPOST	Tec Obvius, AL6061 shaft with forged head, diam 27.2mm, 0mm seatback, length: 350mm-15", 400mm-17/21"
SADDLE	Selle Royal Seta S1, manganese rail, 277x144mm

NITRON 9.3 - XT/SLX 1X12SP

CODE	YPBP5
COLOR	6U - CK16/Black-Red Full Glossy, 7G - Light Grey/Black-Red Full Glossy
FRAME	Nitron 29" full carbon monocoque, 1.5" tapered HT, BB92, seatpost diam. 27,2mm, HDM FD, PM 160mm carbon dropout 12x148mm BOOST Thru axle, internal cable routing, sizes 15-17-19-21"
SEATPOST CLAMP	MX-112C diam. 31,8mm
HEADSET	Fsa Orbit C-40, NO.42/ACB-A, 1.1/8"-1.5" w/4.3mm cap
FORK	Rock Shox Judy Gold RL 29" Solo Air 100mm w/OneLoc, 1.5 Tapered HT, 15x110mm Maxle stealth, 30mm stanchions, magnesium lowers, PM 160mm disc mount
SHIFTER	Shimano SLX 1x12sp
REAR DERAILLEUR	Shimano XT RD-M8100-SGS Shadow Design + 12sp, top normal, direct attachment, max 10-51T
CRANKSET	Shimano FC-MT610 32T, 52mm chainline, crank length: 170mm-15", 175mm-17/21"
BOTTOM BRACKET	Sram DUB PressFit BB92 (41x92)
CHAIN	Shimano CN-M7100 12sp
CASSETTE / FREEWHEEL	Shimano CS-M7100-12, 10-51T
BRAKE	Shimano BR-MT200, w/180mm front adapter, resin pad
DISC ROTOR	Shimano SM-RT10 CL, diam. 180mm front & 160mm rear, Center Lock, for resin pad only
FRONT HUB	Formula CL-811 for Center Lock, 32h, thru axle 15x110mm, sealed bearings
REAR HUB	Shimano FH-MT510-B, Center Lock, 32h, thru axle 12x148mm, Shimano 12speed freewheel body
RIM/WHEELSET	WTB KOM light i25 29", 32 holes, 622x25

TIRE	Kenda Booster Pro 29x2.20, Tubeless Race compound, 120Tpi, folding, ETRTO 56-622
STEM	Tec Obvius 3D forged alloy 6061, +/-7°, 1.1/8", diam. 31.8mm, ext: 70mm-15", 80mm-17", 90mm-19/21"
HANDLEBAR	Tec Obvius flat DB Alloy 6061-T6, width 720mm, diam. 31,8mm, 9° backsweep
GRIP / TAPE	T-One Rock T-GP34 single lock grip , TPR, plastic inner body, aluminium clamp
SEATPOST	Tec Obvius, AL6061 shaft with forged head, diam. 27.2mm, 0mm seatback, length 350mm-15", 400mm-17/21"
SADDLE	Selle Royal Seta S1, manganese rail, 277x144mm

NITRON 9.4 - NX/SX EAGLE 1X12SP

THE IMAGE SHOWN IS INDICATIVE ONLY. Components and graphic details may differ from the actual model.

CODE	YPB07
COLOR	6U - CK16/Black-Red Full Glossy, 5L - Black/Graphite-Red Full Matt
FRAME	Nitron 29" full carbon monocoque, 1.5" tapered HT, BB92, seatpost diam. 27,2mm, HDM FD, PM 160mm carbon dropout 12x148mm BOOST Thru axle, internal cable routing, sizes 15-17-19-21"
SEATPOST CLAMP	MX-112C diam. 31,8mm
HEADSET	Fsa Orbit C-40, NO.42/ACB-A, 1.1/8"-1.5" w/4.3mm cap
FORK	Rock Shox Judy Silver TK 29" Solo Air 100mm w/PopLoc remote, 1.5 Tapered HT, 15x110mm Maxle stealth, 30mm stanchions, magnesium lowers, PM 160mm disc mount
SHIFTER	Sram SX Eagle 1x12sp trigger
REAR DERAILLEUR	Sram NX Eagle 12sp long cage
CRANKSET	Sram X1 1000 Eagle DUB 32T, Direct Mount steel chainring, 52mm chainline BOOST compatible, crank length: 170mm-15", 175mm-17/21"
BOTTOM BRACKET	Sram DUB PressFit BB92, 41x92mm
CHAIN	Sram SX Eagle 12sp
CASSETTE / FREEWHEEL	Sram PG1210 12sp, 11-50T
BRAKE	Shimano BR-MT200, w/180mm front adapter, resin pad
DISC ROTOR	Shimano SM-RT10 CL, diam. 180mm front & 160mm rear, Center Lock, for resin pad only
FRONT HUB	Shimano HB-MT400-B for Center Lock, 32h, 15x110mm TA
REAR HUB	Shimano FH-MT400-B for Center Lock, 32h, 12x148mm BOOST
RIM/WHEELSET	WTB KOM light i25 29", 32 holes, 622x25

TIRE	Kenda Booster Pro 29x2.20, Tubeless Race compound, 120Tpi, folding, ETRTO 56-622
STEM	Tec Obvius 3D forged alloy 6061, +/-7°, 1.1/8", diam. 31.8mm, ext: 70mm-15", 80mm-17", 90mm-19/21"
HANDLEBAR	Tec Obvius flat DB Alloy 6061-T6, width 720mm, diam. 31,8mm, 9° backsweep
GRIP / TAPE	T-One Rock T-GP34 single lock grip , TPR, plastic inner body, aluminium clamp
SEATPOST	Tec Obvius, AL061 shaft with forged head, diam 27.2mm, 0mm seatback, length: 350mm-15", 400mm-17/21"
SADDLE	Selle Royal Seta S1, manganese rail, 277x144mm

MAGMA

POSITIONING
The entrance door to the Bianchi off road world with the unique Italian style and design.

COURSE/TERRAIN
Non-extreme climbs or descents, gravel or fire roads.

END USE DESTINATION
All round model for beginners or young riders.
For anyone who wants to switch from sport, commuting or multi-day travelling.

PRODUCT FEATURES
- Alu frame with 29in wheels
- Leisure dedicated geometry in 29
- Two frame versions for 29" (BOOST QR 141mm & 135mm QR)
- Low brake PM 160mm
- Carrier and mud-guards ready
- HDM side swing (BOOST QR 141mm version)
- Low clamp FD bottom pull (135mm QR version)
- AL6061 frame

LIGHTWEIGHT ●●●●●●○○○○
HANDLING ●●●●●●●●○○
COMFORT ●●●●●●●●●●
REACTIVITY ●●●●●●●○○○

GEOMETRY - OFF ROAD

SIZE		A	B1	C	D	E	F	G	G1	H	I	X	Y	WB
S	15"	380	570	460	60	100	658	74°	69.5°	51	500	394	609	1112
M	17"	430	590	460	60	110	672	73.5°	69.5°	51	500	407	616	1126
L	19"	480	615	460	60	120	698	73.5°	69.5°	51	500	430	626	1152
XL	21"	530	635	460	60	130	719	73.5°	69.5°	51	500	447	635	1172

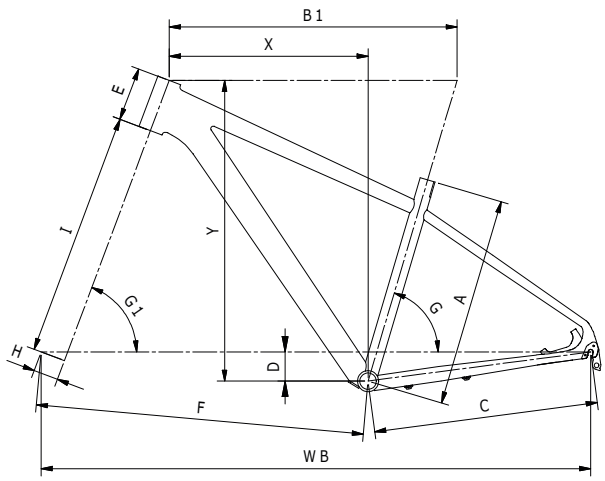

MAGMA 9S - SX EAGLE 1X12SP FOR EUROPE

CODE	YPBI1
COLOR	6K - CK16/Black-White Full Glossy, 6B - Black/CK16-White Full Glossy,
FRAME	Magma 29 alu, 1.1/8" HT, BSA 68mm, seatpost diam. 27,2mm, HDM bottom pull or Side-Swing, PM 160mm, BOOST 9x141mm QR, internal cable routing, sizes 15-17-19-21"
SEATPOST CLAMP	339QX diam. 31,8mm, alloy clamp & lever
HEADSET	Fsa TH888 forged steel cups ID diam.34mm, stack height 12,8+11=23,8mm, w/15mm cap
FORK	Rock Shox 30 Silver TK 29" Solo Air, 100mm w/PopLoc remote, 1.1/8" Alu HT, 9mm QR axle, 30mm stanchions, magnesium lowers, PM 160mm disc mount
SHIFTER	Sram SX Eagle 1x12sp trigger
REAR DERAILLEUR	Sram SX Eagle 12sp, long cage
CRANKSET	Sram X1 1000 Eagle DUB 32T, Direct Mount steel chainring, 52mm chainline BOOST compatible, crank length: 170mm-15", 175mm-17/21"
BOTTOM BRACKET	Sram DUB Bsa
CHAIN	Sram SX Eagle 12sp
CASSETTE / FREEWHEEL	Sram PG1210 12sp, 11-50T
BRAKE	Shimano BR-MT201, resin pad
DISC ROTOR	Shimano SM-RT10 160mm, Center Lock, resin pad only
FRONT HUB	Formula CL-1420 for Center Lock, 32h 100mm OLD, loose balls, axle length 108mm, w/QR
REAR HUB	Shimano FH-MT200-B for Center Lock, 32h, 141mm BOOST
RIM/WHEELSET	AlexRims DP2.5, 622x25c, 32h, Presta valve hole

TIRE	Kenda Booster 29x2.20, DTC compound, 30Tpi, wire, ETRTO 56-622
STEM	Tec Obvius 3D forged alloy 6061 anodized sandblasted, +/-7°, 1.1/8", diam. 31.8mm, lenght: 80mm-15/17", 90mm-19/21"
HANDLEBAR	Tec Obvius flat DB Alloy 6061-T6, width 720mm, diam. 31,8mm, 9° backsweep
GRIP / TAPE	T-one T-GP48B, one piece grip, TPR material, 130mm
SEATPOST	Tec, AL2014 shaft, alloy head, diam. 27,2mm, 0mm seatback, length: 350mm
SADDLE	Tec Rector, 140mm width, Steel rails, Pvc soft touch cover

6B - Black/CK16-White Full Glossy

MAGMA 9.0 - DEORE 2X10SP

CODE	YPBR9
COLOR	6K- CK16/Black-White Full Glossy
FRAME	Magma 29 alu, 1.1/8" HT, BSA 68mm, seatpost diam. 27,2mm, HDM bottom pull or Side-Swing, PM 160mm, BOOST 9x141mm QR, internal cable routing, sizes 15-17-19-21"
SEATPOST CLAMP	339QX diam. 31,8mm, alloy clamp & lever
HEADSET	Fsa TH888 forged steel cups ID diam.34mm, stack height 12,8+11=23,8mm, w/15mm cap
FORK	SR Suntour XCR32 RL-R DS 29" 100mm w/Remote Lockout, 1.1/8" steel HT, alloy crown, coil spring w/pre-load adjust, steel 32mm stanchions, magnesium lowers w/PM 160mm disc mount, 9mm QR
SHIFTER	Shimano Deore SL-M6000 2x10sp
REAR DERAILLEUR	Shimano Deore RD-M6000-GS Shadow Plus Design 10sp, direct attachment, max 11-42T
FRONT DERAILLEUR	Shimano Deore HDM FD-M6020-D, Side-Swing, 66/69°, for 34/38T w/10T capacity
CRANKSET	Shimano FC-MT500-B2 36x26T, BOOST compatible, crank length: 170mm-15/17", 175mm-19/21"
BOTTOM BRACKET	Shimano SM-BB52
CHAIN	Kmc X10 EPT finish
CASSETTE / FREEWHEEL	Shimano CS-HG500-10, 11-13-15-18-21-24-28-32-37-42T
BRAKE	Shimano BR-MT200, resin pad
DISC ROTOR	Shimano SM-RT10, 160mm front & rear, Center Lock, for resin pad only
FRONT HUB	Formula CL-1420 for Center Lock, 32h 100mm OLD, loose balls, axle length 108mm, w/QR

REAR HUB	Shimano FH-MT200-B for Center Lock, 32h, 141mm BOOST
RIM/WHEELSET	AlexRims DP2.5, 622x25c, 32h, Presta valve hole
TIRE	Kenda Booster 29x2.20, DTC compound, 30Tpi, wire, ETRTO 56-622
STEM	Tec Obvius 3D forged alloy 6061 anodized sandblasted, +/-7°, 1.1/8", diam. 31.8mm, lenght: 80mm-15/17", 90mm-19/21"
HANDLEBAR	Tec Obvius flat DB Alloy 6061-T6, width 720mm, diam. 31,8mm, 9° backsweep
GRIP / TAPE	T-one T-GP48B, one piece grip, TPR material, 130mm
SEATPOST	Tec, AL2014 shaft, alloy head, diam. 27,2mm, 0mm seatback, length: 350mm
SADDLE	Tec Rector, 140mm width, Steel rails, Pvc soft touch cover

MAGMA 9.2 - ALIVIO/ALTUS 3X9SP

CODE	YPBW2
COLOR	6K - CK16/Black-White Full Glossy, MB - Black/Silver-Yellow Matt
FRAME	Magma 29" alu, 1,1/8" HT, BSA 68mm, seatpost diam. 27,2mm, low clamp FD diam. 31,8mm bottom pull or Side-Swing, PM 160mm, dropouts 9x135mm QR, internal cable routing, sizes 15-17-19-21"
SEATPOST CLAMP	339QX diam. 31,8mm, alloy clamp & lever
HEADSET	Fsa TH888 forged steel cups ID diam.34mm, stack height 12,8+11=23,8mm, w/15mm cap
FORK	SR Suntour XCM HLO DS 29" 100mm, w/HLO Hydraulic lockout, 1.1/8" steer HT, alloy crown, coil spring w/pre-load adjust, steel 30mm stanchions, alloy lowers w/PM 160mm, QR 9mm
SHIFTER	Shimano SL-M2010 3x9sp
REAR DERAILLEUR	Shimano Alivio RD-M4000-SGS 9sp, top-normal shadow design, direct attachment, for 36T max
FRONT DERAILLEUR	Shimano FD-M2000 low clamp diam. 31,8mm, dual pull, 66/69°, for 40T w/18T capacity, CL 50mm
CRANKSET	Shimano FC-MT101 40x30x22T, crank length: 170mm-15/17", 175mm-19/21"
BOTTOM BRACKET	Shimano BB-UN100, Axle LL123 (122,5mm)
CHAIN	Kmc HV900 9sp
CASSETTE / FREEWHEEL	Shimano HG200-9, 11-13-15-17-20-23-26-30-36T
BRAKE	Shimano BR-MT200, resin pad
DISC ROTOR	Shimano SM-RT10, 160mm front & rear, Center Lock, for resin pad only
FRONT HUB	Formula CL-1420 for Center Lock, 32h 100mm OLD, loose balls, axle length 108mm, w/QR

REAR HUB	Formula CL-1422 for Center Lock, 32h, 135mm OLD, loose balls, axle length 145mm, w/QR
RIM/WHEELSET	AlexRims DP2.5, 622x25c, 32h, Presta valve hole
TIRE	Kenda Booster 29x2.20, DTC compound, 30Tpi, wire, ETRTO 56-622
STEM	Tec 3D forged alloy 6061, +/-7°, 1.1/8", diam. 31.8mm, ext: 80mm-15/17", 90mm-19/21"
HANDLEBAR	Tec PG Alloy 6061, width 700mm, diam. 31,8mm, rise 15mm, backsweep 9°
GRIP / TAPE	T-one T-GP48B, one piece grip, TPR material, 130mm
SEATPOST	Tec, AL2014 shaft, alloy head, diam. 27,2mm, 0mm seatback, length: 350mm
SADDLE	Tec Rector, 140mm width, Steel rails, Pvc soft touch cover

DUEL

POSITIONING
The entrance door to the Bianchi off road world. The paintscheme is an homage to the famous "Ragno" series of the 90's.

COURSE/TERRAIN
Asphalt, non-extreme climbs or descents, gravel or fire roads.

END USE DESTINATION
All round model for beginners or young riders.
For anyone who wants to switch from sport, commuting or multi-day travelling.

KEY FEATURES
- Aluminium frame in 27.5" and 29" with off-road geometry
- Semi-integrated Headset
- IS standard disc mount
- Carrier and mud-guards ready

LIGHTWEIGHT ●●●●●●○○○○
HANDLING ●●●●●●●●○○
COMFORT ●●●●●●●●●●
REACTIVITY ●●●●●●●○○○

GEOMETRY - 27.5"

SIZE		A	B1	BS	C	D	E	G	G1	Y	X
XS	13"	340	535	539	440	50	110	73.5°	70°	591	360
S	15"	380	560	552	440	50	110	73.5°	71°	595	384
M	17"	430	580	563	440	50	120	73.5°	70°	605	401
L	19"	480	605	582	440	50	125	73.5°	71°	609	424
XL	21"	530	625	601	440	50	130	73.5°	71°	614	443

GEOMETRY - 29"

SIZE		A	B1	BS	C	D	E	G	G1	Y	X
XS	15"	380	565	560	460	60	100	74°	70°	601	393
S	17"	430	590	574	460	60	110	73.5°	71°	615	408
M	19"	480	610	588	460	60	120	73.5°	71°	625	425
L	21"	530	630	605	460	60	130	73.5°	71°	634	442

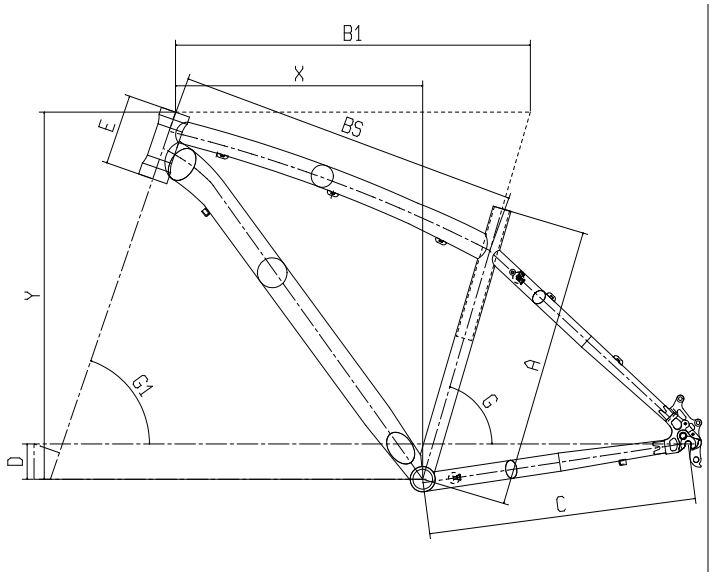

DUEL 29S - ACERA/ALTUS 3X9SP HYDR. BRAKE

CODE	YPBC8
COLOR	8L - Black/ CK16-Violet Full Matt, 8Y - Black/Yellow-Violet Full Matt
FRAME	Duel 29" alu, 1.1/8" HT, BSA 68mm, seatpost diam. 27,2mm, seat tube diam. 31,8mm, FD top pull, INTL 160mm disc mounting dropouts 9x135mm QR, external cable routing under TT, sizes 15-17-19-21"
SEATPOST CLAMP	339QX diam. 31,8mm, alloy clamp & lever
HEADSET	Fsa TH888 forged steel cups ID diam.34mm, stack height 12,8+11=23,8mm, w/15mm cap
FORK	SR Suntour XCM HLO DS 29" 100mm, w/HLO Hydraulic lockout, 1.1/8" steer HT, alloy crown, coil spring w/pre-load adjust, steel 30mm stanchions, alloy lowers w/PM 160mm, QR 9mm
SHIFTER	Shimano SL-M2010 3x9sp
REAR DERAILLEUR	Shimano Acera RD-M3000 9sp, top-normal, direct attachment, max 11-36T
FRONT DERAILLEUR	Shimano FD-M2000 low clamp diam. 31,8mm, dual pull, 66/69°, for 40T w/18T capacity, CL 50mm
CRANKSET	Shimano FC-MT101 40x30x22T, crank length: 170mm-15/17", 175mm-19/21"
BOTTOM BRACKET	Shimano BB-UN100, Axle LL123 (122,5mm)
CHAIN	Kmc HV900 9sp
CASSETTE / FREEWHEEL	Shimano HG200-9, 11-13-15-17-20-23-26-30-36T
BRAKE	Shimano BR-M200, w/IS 160mm rear adapter, resin pad
DISC ROTOR	Shimano SM-RT10, 160mm front & rear, Center Lock, for resin pad only
FRONT HUB	Formula CL-1420 for Center Lock, 32h 100mm OLD, loose balls, axle length 108mm, w/QR

REAR HUB	Formula CL-1422 for Center Lock, 32h, 135mm OLD, loose balls, axle length 145mm, w/QR
RIM/WHEELSET	AlexRims DP2.5, 622x25c, 32h, Presta valve hole
TIRE	Kenda Booster 29x2.20, DTC compound, 30Tpi, wire, ETRTO 56-622
STEM	Tec 3D forged alloy 6061, +/-7°, 1.1/8", diam. 31.8mm, ext: 80mm-15/17", 90mm-19/21"
HANDLEBAR	Tec PG Alloy 6061, width 700mm, diam. 31,8mm, rise 15mm, backsweep 9°
GRIP / TAPE	T-one T-GP48B, one piece grip, TPR material, 130mm
SEATPOST	Tec AL2014 shaft, alloy head, diam. 27.2mm, 0mm seatback, length: 300mm-15", 350mm-17/21"
SADDLE	Tec Rector, 140mm width, Steel rails, Pvc soft touch cover

DUEL 27S - ACERA/ALTUS 3X9SP HYDR. BRAKE

THE IMAGE SHOWN IS INDICATIVE ONLY. Components and graphic details may differ from the actual model.

CODE	YPBC7
COLOR	8L - Black/CK16-Violet Full Matt, 8Y - Black/Yellow-Violet Full Matt
FRAME	Duel 27,5" alu, 1.1/8" HT, BSA 68mm, seatpost diam. 27,2mm, seat tube diam. 31,8mm, FD top pull, INTL 160mm disc mounting dropouts 9x135mm QR, ST w/V-Brake studs, external cable routing under TT, sizes 15-17-19-21"
SEATPOST CLAMP	339QX diam. 31,8mm, alloy clamp & lever
HEADSET	Fsa TH888 forged steel cups ID diam.34mm, stack height 12,8+11=23,8mm, w/15mm cap
FORK	SR Suntour XCM HLO DS 27,5" 100mm, with HLO Hydraulic Lockout, 1.1/8" HT, alloy crown, coil spring w/preload adjust, steel 30mm stanchions, alloy lowers w/PM 160mm, 9mm QR
SHIFTER	Shimano SL-M2010 3x9sp
REAR DERAILLEUR	Shimano Acera RD-M3000 9sp, top-normal, direct attachment, max 11-36T
FRONT DERAILLEUR	Shimano FD-M2000 low clamp diam. 31,8mm, dual pull, 66/69°, for 40T w/18T capacity, CL 50mm
CRANKSET	Shimano FC-MT101 40x30x22T, crank length: 170mm-15/17", 175mm-19/21"
BOTTOM BRACKET	Shimano BB-UN100, Axle LL123 (122,5mm)
CHAIN	Kmc HV900 9sp
CASSETTE / FREEWHEEL	Shimano HG200-9, 11-13-15-17-20-23-26-30-36T
BRAKE	Shimano BR-M200, w/IS 160mm rear adapter, resin pad
DISC ROTOR	Shimano SM-RT10, 160mm front & rear, Center Lock, for resin pad only
FRONT HUB	Formula CL-1420 for Center Lock, 32h 100mm OLD, loose balls, axle length 108mm, w/QR
REAR HUB	Formula CL-1422 for Center Lock, 32h, 135mm OLD, loose balls, axle length 145mm, w/QR

RIM/WHEELSET	AlexRims DP2.5, 584x25c, 32h, Presta valve
TIRE	Kenda Booster 27,5x2.2, DTC compound, 30Tpi, wire, ETRTO 56-584
STEM	Tec 3D forged alloy 6061, +/-7°, 1.1/8", diam. 31.8mm, ext: 80mm-15/17", 90mm-19/21"
HANDLEBAR	Tec PG Alloy 6061, width 700mm, diam. 31,8mm, rise 15mm, backsweep 9°
GRIP / TAPE	T-one T-GP48B, one piece grip, TPR material, 130mm
SEATPOST	Tec AL2014 shaft, alloy head, diam. 27.2mm, 0mm seatback, length: 300mm-15", 350mm-17/21"
SADDLE	Tec Rector, 140mm width, Steel rails, Pvc soft touch cover

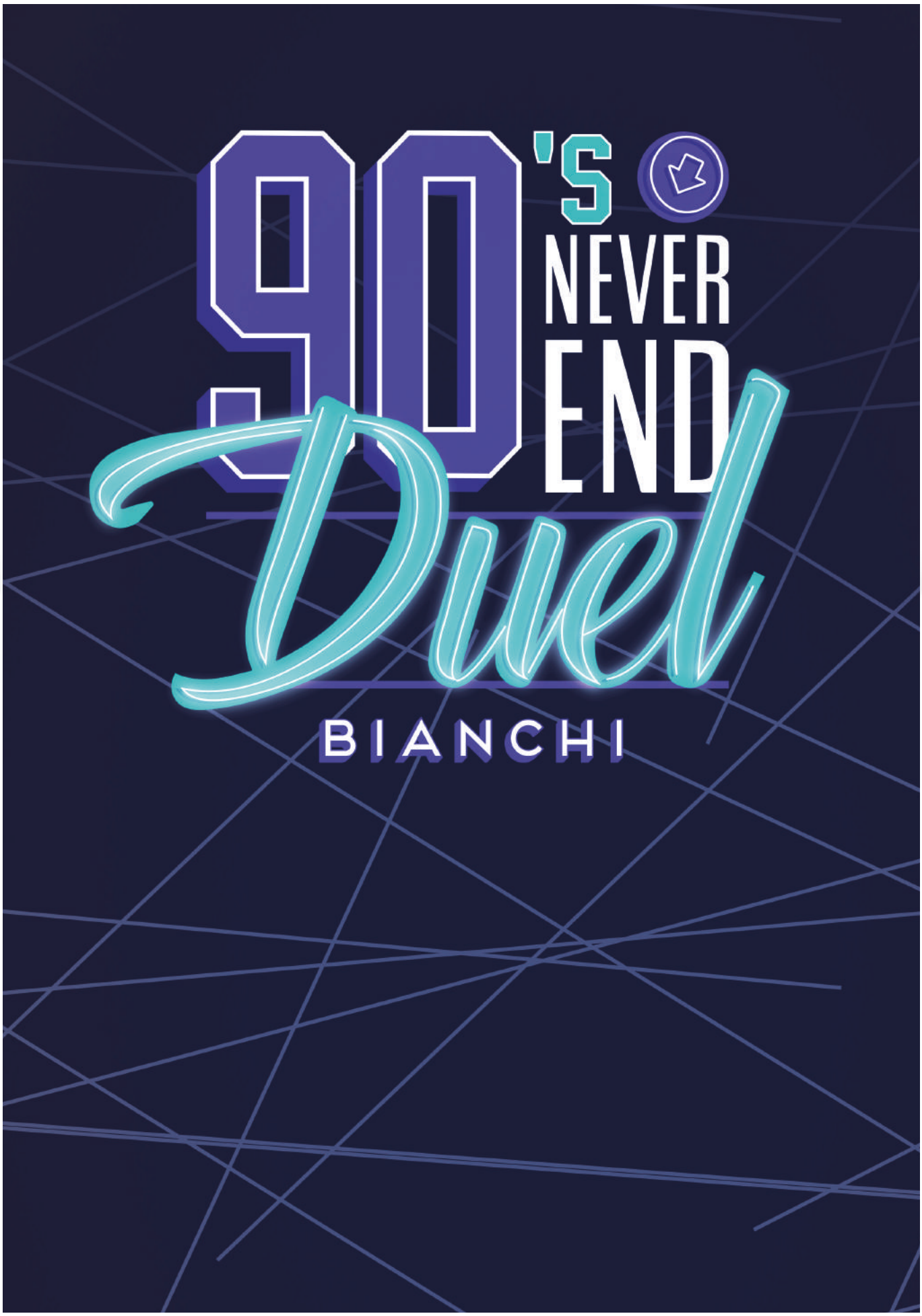
90's
NEVER
END
Duel
BIANCHI

E-BIKES+

E-ROAD / GRAVEL
E-MTB
E-CITY

Bianchi
LIF-e

E-ROAD / GRAVEL

ARIA E-ROAD
IMPULSO E-ROAD

ARIA E-ROAD

POSITIONING
E-road light carbon bike, designed with aero tubes profiles.

COURSE/TERRAIN
Road, hilly fast courses and demanding climbs.

END USE DESTINATION
All-round riders with a true racing soul and a desire to take on long, demanding rides.

KEY FEATURES
- Aero carbon frame and fork
- Full carbon seatpost with adjustable and reversible head
- Small and light motor unit
- Dedicated App for smartphone
- 7 sizes: 47, 50, 53, 55, 57, 59 and 61cm
- Weight: 11,9 kg (size 55)
- Racing geometry

AUTONOMY - BATTERY 250WH
Up to 1.200 meters of elevation gain. Autonomy could be increased with 250W Xtra Power external battery

CHARGING TIME
Complete **3.5/4h**

ASSISTANCE (%)
Eco (Green) **30%**
Comfort (Orange) **60%**
Power (Red) **100%**

POWERED BY
IPD V2
Inner Power Drive

GEOMETRY - RACING

MIS-SLP									
A1	AS	B1	BS	C	D	E	G	G1	W
470	450	515	497	437	68	120	74.5°	70°	1016
500	470	525	508	437	68	125	74.5°	70.5°	1022
520	490	535	519	440	68	130	74°	70.5°	1030
550	520	550	534	440	68	145	73.5°	71.5°	1031
570	540	560	546	440	68	155	73.5°	72°	1036
590	570	575	562	443	68	175	73°	72°	1049
610	590	585	572	443	68	185	72.5°	72.5°	1049
630	610	595	581	443	68	210	72.5°	72.5°	1058

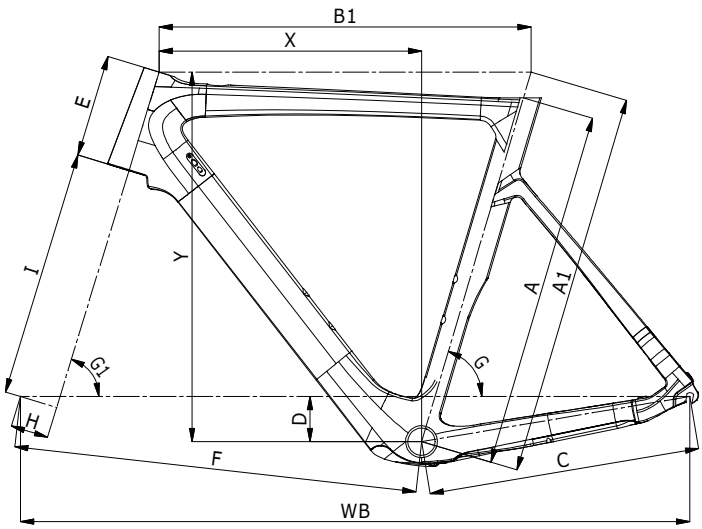

ARIA E-ROAD - ULTEGRA DI2 11SP COMPACT

CODE	YPBN9
COLOR	2A - CK16/Black Glossy
FRAME	Aria E-Road Disc carbon, mechanical/electronic shifting compatible, PressFit 86,5x41mm BB, head tube 1.4"-1.1/8", integrated seat clamp, full carbon dropout, flat mount, QR system, OLD 135mm, sizes 47-50-53-55-57-59-61cm
SEATPOST CLAMP	included in the frame
HEADSET	Fsa Orbit C-33, NO.44E, 1.1/8"›1.14", 45°/45° ACB steeel bearings, w/15mm top cap for 47mm/52mm OD head tube
FORK	Bianchi Full Carbon 1.4"›1.1/8" integrated head, Disc brake flat mount, thru axle 12x100mm
SHIFTER	Shimano Ultegra Di2 ST-R8070 2x11sp
REAR DERAILLEUR	Shimano Ultegra Di2 RD-R8050 GS 11sp, top normal shadow design, direct attachment, Max 34T
FRONT DERAILLEUR	Shimano Ultegra Di2 FD-R8050, brazed-on type
ELECTRIC CABLE	Shimano Junction-A SM-EW90-A, Dura-Ace Di2, E-Tube port X3, charging port X1
CHARGER / PWR CABLE	Shimano Battery charger SM-BCR2, including charging cord for usb
CRANKSET	Shimano Ultegra FC-R8000 52x36T, Hollowtech II, Crank Length: 170mm-47/53cm, 172.5mm-55/59cm, 175mm-61cm
BOTTOM BRACKET	Shimano SM-BB72-41B, PressFit
CHAIN	Shimano Ultegra CN-HG701-11, 11sp
CASSETTE / FREEWHEEL	Shimano 105 CS-R7000, 11-12-13-14-16-18-20-22-25-28-32T
BRAKE	Shimano BR-R8070 Hydraulic disc brake, flat mount calipers
BRAKE LEVER	included w/shifters

DISC ROTOR	Shimano SM-RT86, diam. 160mm
RIM/WHEELSET	Vision Trimax Alloy disc, w/rear hub Ebikemotion X35 motor unit
TIRE	Vittoria Rubino Pro G2.0 Graphene 700x28, 150TPI, Folding, full Black
STEM	Reparto Corse 3D Forged alloy 6061, rise -8°, 1.1/8", Ext: 90mm-47/50cm, 100mm-53cm, 110mm-55/57cm, 120mm-59cm, 130mm-61cm
HANDLEBAR	Reparto Corse Aero Compact, alloy 6061 diam. 31,8mm, reach 74mm, drop 116mm, Size: 400mm-47/53cm, 420mm-55/59cm, 440mm-61cm
GRIP / TAPE	La Spirale Ribbon cork w/carbon look plugs w/Bianchi logo
SEATPOST	Aria Full Carbon Aero, clamp with alloy head adjustable and reversible +/- 35mm; length: 250mm-44cm, 300mm-47/50cm, 350mm-53/61cm
SADDLE	Selle Royal Seta S1, steel rails, 278x144mm
BOTTLE CAGE	Elite Cannibal XC, fiberglass, side-entry
WATER BOTTLE	Bianchi Loli 600ml
MOTOR UNIT	Ebikemotion X35 system: 250W rear hub motor unit, 250Wh integrated battery and iWOC One remote control

POWER WHEN YOU NEED IT

Bianchi engineers integrated the iWOC One flush-fit power and battery level controls unobtrusively into the Aria e-Road's aero top tube.

The X35 V.2 M1 motor is powered by a slim, 40mm wide 250W battery, positioned inside the downtube of the Aria e-Road frame.

Nestled between the rear cassette sprockets and the rear disc brake rotor, the motor is virtually hidden.

ARIA E-ROAD - ULTEGRA 11SP COMPACT

CODE	YPBN8
COLOR	2A - CK16/Black full Glossy
FRAME	Aria E-Road Disc carbon, mechanical/electronic shifting compatible, PressFit 86,5x41mm BB, head tube 1.4"-1.1/8", integrated seat clamp, full carbon dropout, flat mount, QR system, OLD 135mm, sizes 47-50-53-55-57-59-61cm
SEATPOST CLAMP	included in the frame
HEADSET	Fsa Orbit C-33, NO.44E, 1.1/8"›1.14", 45°/45° ACB steeel bearings, w/15mm top cap for 47mm/52mm OD head tube
FORK	Bianchi Full Carbon 1.4"›1.1/8" integrated head, Disc brake flat mount, thru axle 12x100mm
SHIFTER	Shimano Ultegra ST-R8020 2x11sp, hydraulic discbrake, Shimano Ultegra ST-R8025 2x11sp, smallerlever size for sizes 47/53cm
REAR DERAILLEUR	Shimano Ultegra RD-R8000 GS 11sp, top normal shadow design, direct attachment, compatible with low gear 28-34T
FRONT DERAILLEUR	Shimano Ultegra FD-R8000, down swing, brazed-on type, 61-66°, max chainring 46/53T, CL: 43,5mm
BATTERY / MOUNT	Ebikemotion X35 integrated battery 250Wh
CRANKSET	Shimano Ultegra FC-R8000 52x36T, Crank Length: 165mm-44cm, 170mm-47/53cm, 172.5mm-55/59cm, 175mm-61cm
BOTTOM BRACKET	Shimano SM-BB72-41B, PressFit
CHAIN	Shimano Ultegra CN-HG701-11, 11sp
CASSETTE / FREEWHEEL	Shimano 105 CS-R7000, 11-12-13-14-16-18-20-22-25-28-32T
BRAKE	Shimano BR-R8070 Hydraulic disc brake, flat mount calipers

BRAKE LEVER	included w/shifters
DISC ROTOR	Shimano SM-RT86, diam. 160mm
RIM/WHEELSET	Vision Trimax alloy disc, rear hub w/Ebikemotion X35 motor unit
TIRE	Vittoria Rubino IV 700x28, 60TPI, Folding, G2.0Graphene, black
STEM	Reparto Corse 3D Forged alloy 6061, rise - 8°, 1.1/8", Ext: 90mm-47/50cm, 100mm-53cm, 110mm-55/57cm, 120mm-59cm, 130mm-61cm
HANDLEBAR	Reparto Corse Aero Compact, alloy 6061 diam. 31,8mm, reach 74mm, drop 116mm, Size: 400mm-47/53cm, 420mm-55/59cm, 440mm-61cm
GRIP / TAPE	La Spirale Ribbon cork w/carbon look plugs w/Bianchi logo
SEATPOST	Aria Full Carbon Aero, clamp with alloy head adjustable and reversible +/- 35mm; length: 300mm-47/50cm, 350mm-53/61cm
SADDLE	Selle Royal Seta S1, steel rails, 278x144mm
BOTTLE CAGE	Elite Cannibal XC, fiberglass, side-entry
WATER BOTTLE	Bianchi Loli 600ml
MOTOR UNIT	Ebikemotion X35 system: 250W rear hub motor unit, 250Wh integrated battery and iWOC One remote control

IMPULSO E-ROAD

POSITIONING
Aluminum E-road bike, with endurance geometry and integrated look.

COURSE/TERRAIN
Asphalt, gravel roads, mixed terrain, long climbs.

END USE DESTINATION
Different cycling experiences: road, commuting, multi-days tourism.

KEY FEATURES
- Aluminum hydroformed frame
- Full carbon fork
- 12x100/142mm thru axle
- Made in Italy motor unit
- Mudguards and carriers ready
- 8 sizes: 47, 50, 52, 55, 57, 59, 61 and 63cm
- Endurance geometry

AUTONOMY - BATTERY 500WH
(1) **200Km**
(2) **160Km**
(3) **120Km**
(4) **90Km**
(5) **70Km**

CHARGING TIME
Complete **4h**

ASSISTANCE (%)
(1) **30%**
(2) **60%**
(3) **120%**
(4) **250%**
(5) **350%**

GEOMETRY - ENDURANCE

MIS-SLP									
A1	AS	B1	BS	C	D	E	G	G1	W
470	450	515	497	437	68	120	74.5°	70°	1016
500	470	525	508	437	68	125	74.5°	70.5°	1022
520	490	535	519	440	68	130	74°	70.5°	1030
550	520	550	534	440	68	145	73.5°	71.5°	1031
570	540	560	546	440	68	155	73.5°	72°	1036
590	570	575	562	443	68	175	73°	72°	1049
610	590	585	572	443	68	185	72.5°	72.5°	1049
630	610	595	581	443	68	210	72.5°	72.5°	1058

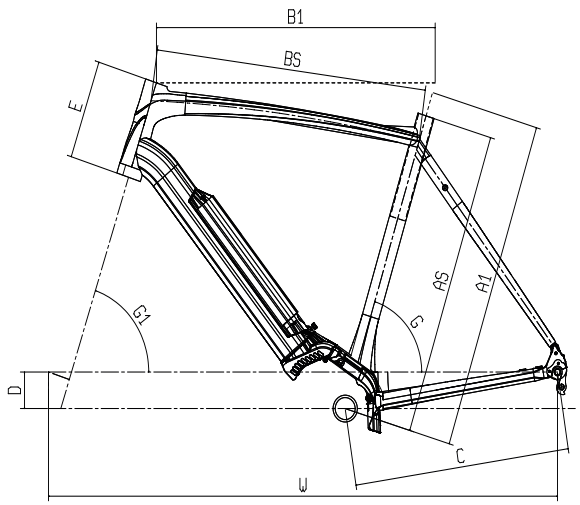

A NEW EXPERIENCE

NO MORE LIMITS WITH IMPULSO E-ROAD AND E-ALLROAD

Take on the big passes like Stelvio, Gavia, Pordoi or challenge yourself with a nice, long ride on the legendary "strade bianche". Dreaming big is possible with Impulso e-Road and e-Allroad with an autonomy up to 200km.

The Impulso e-Road and e-Allroad have a front derailleur with two front chainrings. The frame was specifically designed for a similar saddle positioning to that of a traditional bike.

IMPULSO E-ROAD - ULTEGRA 11SP

CODE	YPBN6
COLOR	3D - Black/CK16-Graphite Full Matt
FRAME	Impulso E-Road Alu Triple Hydroforming Technology. Integrated headset 1.1/8", 700C OLD 142mm, thru axle, flat mount disc, size: 47-50-53-55-57-59-61-63cm
SEATPOST CLAMP	MX-112C alloy, diam. 35mm
HEADSET	Fsa NO.8B/ZS4D 1.1/8" semi-integrated lower part + integrated upper part, w/15mm Top cover for 46mm/50 OD head tube
FORK	Bianchi Full Carbon Disc 1.1/8", thru axle 12x100mm, flat mount caliper
SHIFTER	Shimano Ultegra ST-R8020 2x11sp, hydraulic discbrake, Shimano Ultegra ST-R8025 2x11sp, smallerlever size for sizes 47/53cm
REAR DERAILLEUR	Shimano Ultegra RD-R8000 GS 11sp, top normal shadow design, direct attachment, compatible with low gear 28-34T
FRONT DERAILLEUR	Shimano Ultegra FD-R8000, down-swing, 61-66°, for 46/53T CL:43.5mm
CRANKSET	Fsa Alloy 50x34, crank length: 170mm-47/57cm, 175mm-59-63cm
BOTTOM BRACKET	included w/motor unit
CHAIN	Kmc X11eS-EPT finish
CASSETTE / FREEWHEEL	Shimano 105 CS-R7000, 11-12-13-14-16-18-20-22-25-28-32T
BRAKE	Shimano BR-R8070 Hydraulic disc brake, flat mount calipers
BRAKE LEVER	included w/shifters

DISC ROTOR	Shimano SM-RT800 Center Lock, diam. 160mm
RIM/WHEELSET	Fulcrum Racing 700 Disc Brake CX, R700 aluminium asymetric rims 622x19c, profile 22mm, center lock AFS, thru axle front 12x100mm, rear 12x142mm
TIRE	Vittoria Zaffiro Pro G2.0 700x32 32-622, 60TPI, Folding, black
STEM	Reparto Corse, 3D Forged alloy 7050, rise +/-7°, height 38mm, 1.1/8", Ext: 70mm-47, 90mm-50cm, 100mm-53cm, 110mm-55cm, 120mm-57cm/59cm, 130mm-61/63cm
HANDLEBAR	Reparto Corse Compact Flat Top, alloy 2014 diam. 31,8mm, reach 126mm, drop 77,4mm, Size: 400mm-47/50cm, 420mm-53/57cm, 440mm-59/63cm
GRIP / TAPE	La Spirale Bike Ribbon Eolo Soft w/cabon look plug w/ Bianchi logo
SEATPOST	Reparto Corse Carbon UD shaft, forged alloy head, diam 31.6mm, 15mm offset, length 350mm
SADDLE	Fi'zi:k Aliante R7, nylon carbon reinforced shell w/ WingFlex, Manganese rail, ICS system
BOTTLE CAGE	bottlecage w/EP3 brackets
WATER BOTTLE	Bianchi Loli 600ml
MOTOR UNIT	Polini EP3, w/battery pack 500W - 36V - 13,6Ah, EP3 display, magnet and wheel sensor

IMPULSO E-ALLROAD - GRX 600 11SP

CODE	YPBN7
COLOR	3B - Black/Graphite-CK16 matt
FRAME	Impulso E-Road Alu Triple Hydroforming Technology. Integrated headset 1.1/8", 700C OLD 142mm, thru axle, flat mount disc, size: 47-50-53-55-57-59-61-63cm
SEATPOST CLAMP	MX-112C alloy, diam. 35mm
HEADSET	Fsa N0.8B/ZS4D 1.1/8" semi-integrated lower part + integrated upper part, w/15mm Top cover for 46mm/50 OD head tube
FORK	Bianchi Full Carbon Disc 1.1/8", thru axle 12x100mm, flat mount caliper
SHIFTER	Shimano GRX 600 ST-RX600 2x11sp
REAR DERAILLEUR	Shimano GRX 810 RD-RX810 Shadow+ Design 11sp, top normal, direct attachment
FRONT DERAILLEUR	Shimano GRX 810 FD-RX810, down-swing, down pull, braze-on type, 61-66°, for 46-50T, CL:46mm
CRANKSET	Fsa Alloy 50x34, crank length: 170mm-47/57cm, 175mm-59-63cm
BOTTOM BRACKET	included w/motor unit
CHAIN	Kmc X11eS-EPT finish
CASSETTE / FREEWHEEL	Shimano CS-HG70011, 11-13-15-17-19-21-23-25-27-30-34T
BRAKE	Shimano BR-RX400, hydraulic disc brakes, flat mount calipers
BRAKE LEVER	included w/shifters
DISC ROTOR	Shimano SM-RT70, Center Lock, with Ice Technology, diam. 160mm

RIM/WHEELSET	Fulcrum Racing 700 Disc Brake CX, R700 aluminium asymetric rims 622x19c, profile 22mm, Center Lock AFS, thru axle front 12x100mm, rear 12x142mm
TIRE	Kenda Flintridge 700x40, 60TPI, black
STEM	Reparto Corse 3D forged Alloy 6061, 7°, diam. 31.8mm, 1.1/8", Ext: 70mm-47cm, 90mm-50cm, 100mm-53cm, 110mm-55cm, 120mm-57/59cm, 130mm-61/63cm
HANDLEBAR	Reparto Corse Aluminum 6061, reach 70mm, flare angle 16°, drop cc 120mm x size 40cm and 130mm x size 42/44cm, Size: 400mm-47/50cm , 420mm-53/57cm, 440mm-59/63cm
GRIP / TAPE	La Spirale Bike Ribbon Eolo Soft w/cabon look plug w/ Bianchi logo
SEATPOST	Reparto Corse AL6061 shaft, alloy head, 15mm offset, diam. 31.6mm, length 350mm
SADDLE	Selle Royal SR 2302HRN w/hole, steel rail, PU soft touch cover, 280x145mm
BOTTLE CAGE	bottlecage w/EP3 brackets
WATER BOTTLE	Bianchi Loli 600ml
MOTOR UNIT	Polini EP3, w/battery pack 500W - 36V - 13,6Ah, EP3 display, magnet and wheel sensor

E-MTB

T-TRONIK PERFORMER
T-TRONIK REBEL
T-TRONIK SPORT

T-TRONIK PERFORMER

POSITIONING
Aggressive trail e-Mtb with carbon frame, designed to climb steep mountains with total downhill control.

COURSE/TERRAIN
Mountains, everyday's trails.

END USE DESTINATION
Expert bikers, ready for the adventure and extreme performances.

KEY FEATURES
- Carbon frame with aluminum rear triangle
- Travel: 150/160mm front, 140mm rear
- Motor: Shimano Steps E8000 250W - 70Nm
- Battery: 630Wh
- Wheel size: 29x2.6, compatible with: 27.5x2.8
- BB Height adjustability through a flip chip positioned on shock rocker link
- Custom top cap w/top tube impact protection
- Internal cable routing
- Fox Live Valve system compatible
- 1.5/1.5 ACR headset
- Boost 12x148mm rear axle
- 4 sizes: S, M, L, XL

GEOMETRIES

/ FLIP CHIP POSITION "HIGH BB"

SIZE		A	B1	C	D	E	F	G	G1	H	X	Y	W
S	15"	400	576	453	36	100	719	74,3°	65,3°	44	406	618	1170
M	17"	440	605	453	36	110	750	74,3°	65,3°	44	432	628	1201
L	19"	480	632	453	36	125	779	74,3°	65,3°	44	456	641	1231
XL	21"	520	656	453	36	140	806	74,3°	65,3°	44	476	655	1257

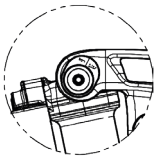

/ FLIP CHIP POSITION "LOW BB"• •

SIZE		A	B1	C	D	E	F	G	G1	H	X	Y	W
S	15"	400	574	450	27	100	719	75°	66°	44	414	613	1168
M	17"	440	603	450	27	110	750	75°	66°	44	440	622	1199
L	19"	480	630	450	27	125	779	75°	66°	44	464	636	1229
XL	21"	520	654	450	27	140	806	75°	66°	44	484	649	1255

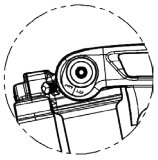

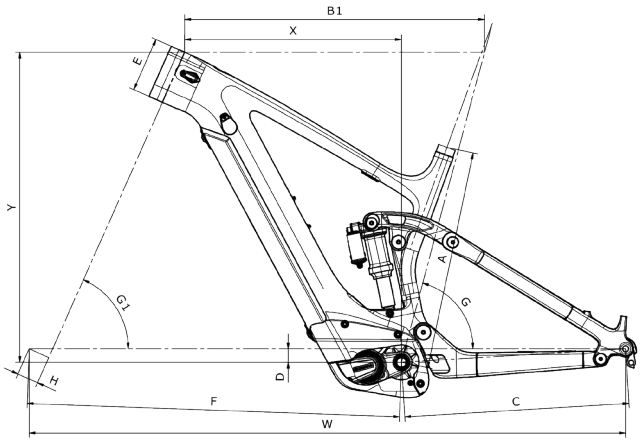

BATTERY
630WH

CHARGING TIME
Complete **5/6h** approx.

ASSISTANCE
3 levels of assistance:
- **Eco**
- **Trail**
- **Boost**

STYLE AND PERFORMANCE

150/160mm front and 140mm rear travel means the T-Tronik Performer makes easy work of the roughest of trails. The aluminium rear triangle provides strength and reliability needed for big days of riding.

ALL DAY POWER

The T-Tronik Performer is powered by Shimano Steps E8000 motor unit and is backed up by an enhanced, custom 630Wh battery.

T-PERFORMER
PERFORMER

Coming in four sizes (S, M, L, XL) and able to run up 29x26 or 27.5x28 wheels you can make sure you get the right fit for you. A flip chip on the shock rocker link allows you to easily and quickly adjust the BB height for the trail ahead. The Fox Live Valve system compatibility takes things one step further.

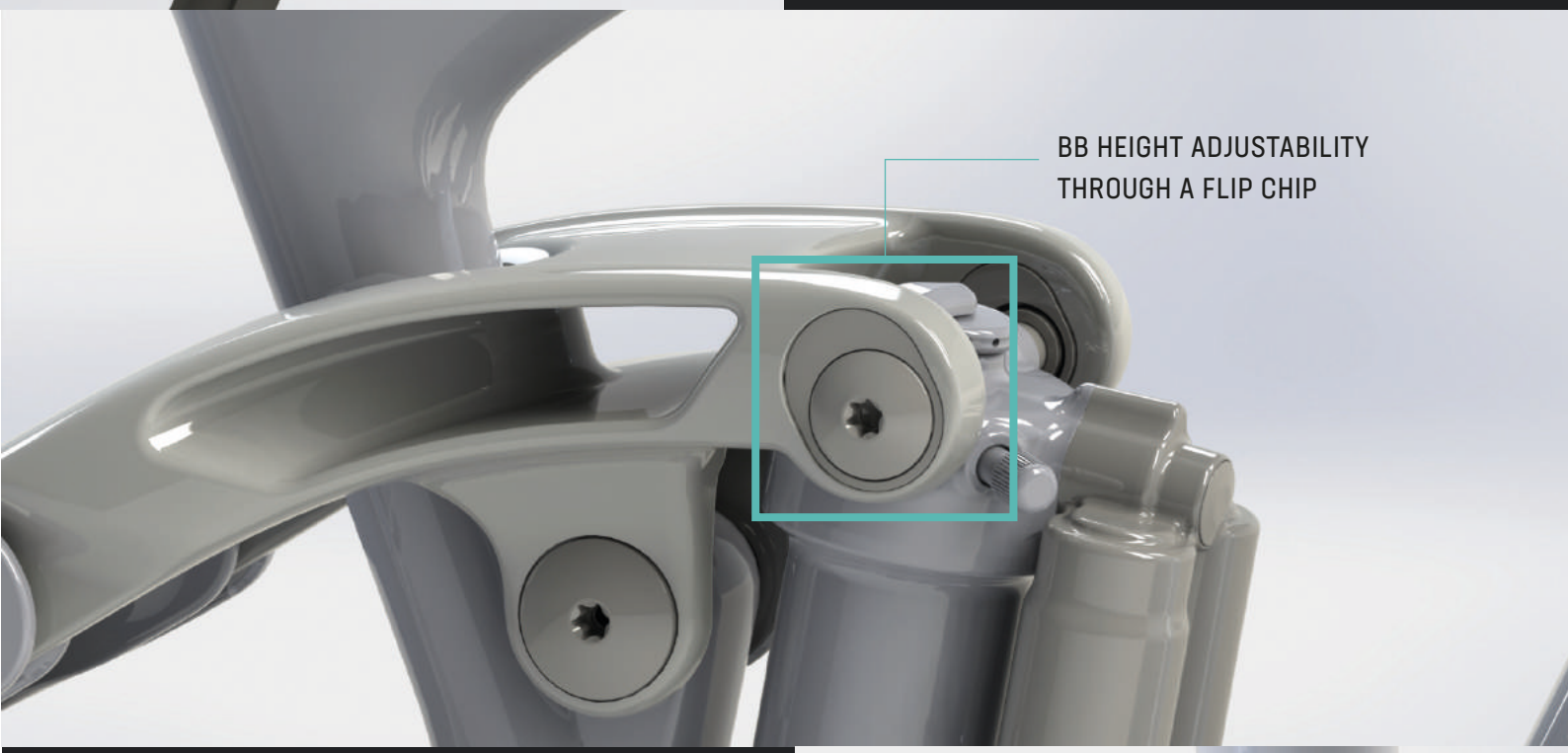

Internal cable routing, custom top cap with top tube impact protection, Boost 12x148mm rear axle and 1.5/1.5 ACR headset are all present here.

T-TRONIK PERFORMER 9.1 - X01 EAGLE 12SP

CODE	YPBU7
COLOR	5G - Black/CK16 Full Glossy, ML - Metal Black/Metal Silver Full Glossy
FRAME	T-Tronik Performer FS 140mm, Carbon front triangle, Alu rear triangle, 1.5" tapered HT, seatpost diam. 31,6mm, seat post clamp diam. 34.9mm, PM 160mm dropout thru axle 12x148mm, internal cable routing, sizes 38-43-48-53cm
REAR SHOCK	Fox Float DPS Factory, Trunnion 185/50, LV, EVOL, 3 position Lever
SEATPOST CLAMP	Alu, 35.4mm clamp
HEADSET	Fsa NO.55R/558 1.5"
FORK	Fox 36 Float 29" Factory, E-bike specific tuning, 160mm travel, Fit4 3 Pos. Lever w/micro adjuster, Kashima stanchions, 1.5" tapered HT, Kabolt 15x110mm BOOST axle
SHIFTER	Sram X01 Eagle 12sp trigger single click & discrete clamp
REAR DERAILLEUR	Sram X01 Eagle 12sp, long cage
CRANKSET	Shimano FC-E8000, Alu crank, length 165mm
BOTTOM BRACKET	Included w/motor unit
CHAIN	Sram NX Eagle 12sp
	Sram PG1230 12sp, 11-50T
BRAKE	Shimano BR-M8120, 4 pistons brakes, w/203mm front and rear adapter, resin pad
DISC ROTOR	Shimano RT-MT800 Front & RT-EM810 Rear w/speed sensor magnet, diam. 203mm, Center Lock
RIM/WHEELSET	DT Swiss H1700 Spline 29" 30mm, thru axle front 15x110mm, rear 12x148mm, TL-ready rims w/tubeless band and valve, straight pull spokes, Center Lock
OPTION WHEELSET1	DT Swiss HXC1200 Spline Carbon 29" 30mm, thru axle front 15x110mm, rear 12x148mm, Shimano body, TL-ready rim w/tubeless band and valve, Center Lock

TIRE	Kenda Hellkat 29x2.6, 60tpi EMC, DTC compound, 66-622 folding
STEM	Tec Cursus, 0°, 1.1/8", diam. 35mm, ext: 50mm
HANDLEBAR	Tec Cursus rise double butted AL7050, width 780mm, diam. 35mm, 20mm rise, 9° backsweep
GRIP / TAPE	T-One Rock T-GP34 single lock grip , TPR, plastic inner body, aluminium clamp
SEATPOST	Fox Transfer Factory, diam 31.6mm, internal cable routing, travel: 100mm-15", 125mm-17", 150mm-19/21"
SADDLE	Fi'zi:k Taiga, S-alloy rails
PEDALS	Fasten NW-91K
MOTOR UNIT	Shimano Steps E-8000 w/Shimano Drive Unit DU-E8000, w/630Wh Battery w/34T Sram XSYNC2 chainring, w/speed sensor, w/Shimano Cycle computer SC-E8000

T-TRONIK PERFORMER 9.2 - XT 12SP

THE IMAGE SHOWN IS INDICATIVE ONLY. Components and graphic details may differ from the actual model.

CODE	YPBU6
COLOR	5G - Black/CK16 Full Glossy, ML - Metal Black/Metal Silver Full Glossy
FRAME	T-Tronik Performer FS 140mm, Carbon front triangle, Alu rear triangle, 1.5" tapered HT, seatpost diam. 31,6mm, seat post clamp diam. 34.9mm, PM 160mm dropout thru axle 12x148mm, internal cable routing, sizes 38-43-48-53cm
REAR SHOCK	Fox Float DPS Performance, Trunnion 185/50, LV, EVOL, 3 position Lever
SEATPOST CLAMP	Alu, 35.4mm clamp
HEADSET	Fsa NO.55R/558 1.5"
FORK	Fox 36 Float 29" Performance, E-bike specific tuning, 150mm travel, Grip2 3 Pos. Lever w/micro adjuster, 1.5" tapered HT, Kabolt 15x110mm BOOST axle
SHIFTER	Shimano XT SL- M8100R 12sp
REAR DERAILLEUR	Shimano XT RD-M8100-SGS Shadow Design + 12sp, top normal, direct attachment, max 10-51T
CRANKSET	Shimano FC-E8000, Alu crank, length 165mm
BOTTOM BRACKET	Included w/motor unit
CHAIN	Shimano CN-M7100, 12sp
CASSETTE / FREEWHEEL	Shimano CS-M7100-12, 10-51T
BRAKE	Shimano BR-M8120, 4 pistons brakes, w/203mm front and rear adapter, resin pad
DISC ROTOR	Shimano RT-64 Front & RT-EM600 Rear w/speed sensor magnet, diam. 203mm, Center Lock
RIM/WHEELSET	DT Swiss H1900 Spline 29" 30mm, thru axle front 15x110mm, rear 12x148mm, Shimano 12sp freewheel body, TL-ready rims w/tubeless band and valve, straight pull spokes, Center Lock

TIRE	Kenda Hellkat 29x2.6, 60tpi EMC, DTC compound, 66-622 folding
STEM	Tec Cursus, 0°, 1.1/8", diam. 35mm, ext: 50mm
HANDLEBAR	Tec Cursus rise double butted AL7050, width 780mm diam.35mm, 20mm rise, 9° backsweep
GRIP / TAPE	T-One Rock T-GP34 single lock grip , TPR, plastic inner body, aluminium clamp
SEATPOST	Crankbrothers Highline 3, diam. 31,6mm, internal remote cable routing w/remote 1x specific, travel: 100mm-15", 125mm-17", 150mm-19/21"
SADDLE	Fi'zi:k Taiga, S-alloy rails
PEDALS	Fasten NW-91K
MOTOR UNIT	Shimano Steps E-8000 w/Shimano Drive Unit DU-E8000, w/630Wh Battery w/34T Shimano SM-CRE80-12B chainring, w/speed sensor, w/Shimano Cycle computer SC-E8000

T-TRONIK PERFORMER 9.3 - XT/SLX 12SP

CODE	YPBU5
COLOR	5G - Black/CK16 Full Glossy, ML - Metal Black/Metal Silver Full Glossy
FRAME	T-Tronik Performer FS 140mm, Carbon front triangle, Alu rear triangle, 1.5" tapered HT, seatpost diam. 31,6mm, seat post clamp diam. 34.9mm, PM 160mm dropout thru axle 12x148mm, internal cable routing, sizes 38-43-48-53cm
REAR SHOCK	Fox Float DPS Performance, Trunnion 185/50, LV, EVOL, 3 position Lever
SEATPOST CLAMP	Alu, 35.4mm clamp
HEADSET	Fsa NO.55R/558 1.5"
FORK	Rock Shox Yari RC 29B" Solo Air, 150mm, MOTION Control Damper , 1.5" Alu HT, 15x110mm BOOST, 35mm stanchions, PM 180mm, Maxle Stealth axle
SHIFTER	Shimano SLX 12sp
REAR DERAILLEUR	Shimano XT RD-M8100-SGS Shadow Design + 12sp, top normal, direct attachment, max 10-51T
CRANKSET	Shimano FC-E8000, Alu crank, length 165mm
BOTTOM BRACKET	Included w/motor unit
CHAIN	Shimano CN-M7100, 12sp
CASSETTE / FREEWHEEL	Shimano CS-M7100-12, 10-51T
BRAKE	Shimano BR-MT520, w/203mm front and rear adapter, resin pad
DISC ROTOR	Shimano RT-64 Front & RT-EM600 Rear w/speed sensor magnet, diam. 203mm, Center Lock
FRONT HUB	Formula CL-811 for Center Lock, 32h, thru axle 15x110mm, sealed bearings
REAR HUB	Shimano FH-MT510-B, Centerlock, 32h, 12x148mm

RIM/WHEELSET	WTB KOM Trail i30 TCS 2.0 29", 32 holes
TIRE	Kenda Hellkat 29x2.6, 60tpi EMC, DTC compound, 66-622 folding
STEM	Tec Cursus, 0°, 1.1/8", diam. 35mm, ext: 50mm
HANDLEBAR	Tec Cursus rise, double butted AL7050, width 780mm, diam. 35mm, 20mm rise, 9° backsweep
GRIP / TAPE	T-One Rock T-GP34 single lock grip , TPR, plastic inner body, aluminium clamp
SEATPOST	YSP32J-FL Dropper seatpost, diam 31.6mm, internal remote cable routing w/remote 1x specific, travel: 100mm-15", 125mm-17", 150mm-19/21"
SADDLE	Fi'zi:k Taiga, S-alloy rails
PEDALS	Fasten NW-91K
MOTOR UNIT	Shimano Steps E-8000 w/Shimano Drive Unit DU-E8000, w/630Wh Battery w/34T Shimano SM-CRE80-12B chainring, w/speed sensor, w/Shimano Cycle computer SC-E8000

T-TRONIK REBEL

POSITIONING
Aluminum full-suspension e-mtb, to go further for longer.

COURSE/TERRAIN
Mountain, hilly courses.

END USE DESTINATION
For the biker seeking adventure and fun.

KEY FEATURES
- Aluminum frame and rear triangle
- Travel: 140/150mm front, 140mm rear
- Motor: Bianchi 250W - 85Nm, 5 level of assistance
- Battery: 630Wh
- Wheel size: 29x2.6, compatible with: 27.5x2.8
- Boost 12x148mm rear axle
- Internal cable routing
- 4 sizes (S, M, L, XL)

GEOMETRY

SIZE		A	B1	C	D	E	F	G	G1	H	X	Y	W
S	15"	400	577	485	22	115	737	75,5°	66°	51	420	609	1221
M	17"	440	600	485	22	125	761	75,5°	66°	51	440	618	1245
L	19"	470	622	485	22	135	785	75,5°	66°	51	460	627	1269
XL	21"	510	644	485	22	145	809	75,5°	66°	51	480	636	1293

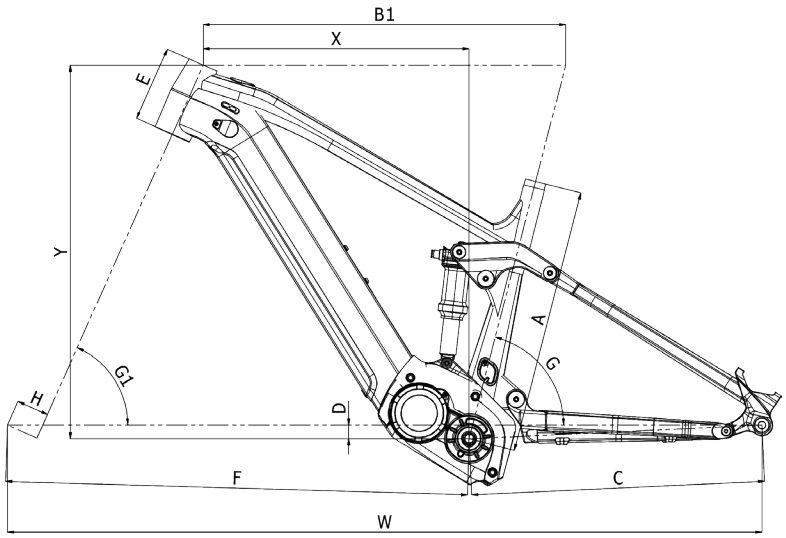

BATTERY
630WH

CHARGING TIME
Complete **5/6h** approx.

ASSISTANCE
(1) **50%**
(2) **100%**
(3) **200%**
(4) **300%**
(5) **400%**

POWERED BY
Bianchi

THE BEATING E-HEART

Powered by the new Bianchi central Motor Unit (250W, 85Nm) and custom made integrated battery (630Wh), the T-Tronik Rebel has power wherever and whenever you need it. Five assistance levels mean you can adjust the power to suit your needs. Full power for climbing those never-ending gravel roads and just a touch for helping you clear the most technical uphill sections.

- TRAVEL: 140/150mm FRONT, 140mm REAR
- WHEEL SIZE: 29X2.6, COMPATIBLE WITH: 27.5X2.8
- BOOST 12X148mm REAR AXLE

READY FOR ANYTHING

With 140/150mm front travel and 140mm rear travel, the T-Tronik Rebel is built for whatever you throw at it. Long days of ripping berms, clearing jumps and slaying steep, technical trails are no problem for the strong and reliable aluminium frame.

T-TRONIK REBEL 9.1 - NX/SX EAGLE 12SP

CODE	YPBU4
COLOR	E9 - Black/CK16 Full Glossy, 3P - Black/Dark Graphite Full Glossy
FRAME	T-Tronik Rebel FS 140mm alu 6061 triple butted, 1.5" tapered HT, seatpost diam. 31,6mm, seat clamp diam. 34.9mm, PM 160mm dropout thru axle 12x148mm, internal cable routing, sizes 38-43-48-53cm
REAR SHOCK	Fox Float DPS Performance, Trunnion 185/50, SV, EVOL, 3 position Lever
SEATPOST CLAMP	MX-112C, alloy, diam. 34,9mm
HEADSET	Fsa Orbit 1.5 ZS #57 w/internal alloy cups, ACB bearings 1.1/8" Upper, 1.5" Lower, w/8mm cap
FORK	Fox 34 Float 29" Rhythm, specific E-bike tuning, 150mm travel, Grip Damper 3 Pos Lever, 1.5" tapered HT, Kabolt 15x110mm BOOST axle
SHIFTER	Sram SX Eagle 12sp trigger single click for e-bike
REAR DERAILLEUR	Sram NX Eagle 12sp, long cage
CRANKSET	Fsa Aluminium crank w/Eagle 34T chainring, length 165mm
BOTTOM BRACKET	Included w/motor unit
CHAIN	Sram SX Eagle 12sp
CASSETTE / FREEWHEEL	Sram PG1210 12sp, 11-50T
BRAKE	Shimano BR-MT520, w/203mm front and rear adapter, resin pad
DISC ROTOR	Shimano SM-RT64 CL, diam. 203mm, Center Lock
FRONT HUB	Shimano HB-MT400-B for Center Lock, 32h, 15x110mm TA
REAR HUB	Shimano FH-MT400-B for Center Lock, 32h, 12x148mm BOOST

RIM/WHEELSET	WTB KOM Trail i30 TCS 2.0 29", 32 holes
TIRE	Kenda Hellkat 29x2.6, 60tpi EMC, DTC compound, 66-622 folding
STEM	Tec Obvius, 0°, 1.1/8", diam. 31.8mm, ext: 55mm
HANDLEBAR	Tec Obvius rise, AL6061-T6 double butted, width 780mm, diam. 31.8mm, 15mm rise, 9° backsweep
GRIP / TAPE	T-One Rock T-GP34 single lock grip , TPR, plastic inner body, aluminium clamp
SEATPOST	YSP18JL Dropper seatpost, diam 31.6mm, internal remote cable routing w/remote 1x specific, travel: 100mm-15", 120mm-17", 150mm-19/21"
SADDLE	Selle Royal Seta S1, manganese rail, 277x144mm
PEDALS	Fasten NW-91K
MOTOR UNIT	Bianchi Motor Unit 250W 85Nm w/630Wh battery

T-TRONIK REBEL 9.2 - NX/SX EAGLE 12SP

CODE	YPBU3
COLOR	E9 - Black/CK16 Full Glossy, 3P - Black/Dark Graphite Full Glossy
FRAME	T-Tronik Rebel FS 140mm alu 6061 triple butted, 1.5" tapered HT, seatpost diam. 31,6mm, seat clamp diam. 34.9mm, PM 160mm dropout thru axle 12x148mm, internal cable routing, sizes 38-43-48-53cm
REAR SHOCK	Rock Shox Deluxe Select+ RL, 185/50 TR
SEATPOST CLAMP	MX-112C, alloy, diam. 34,9mm
HEADSET	Fsa Orbit 1.5 ZS #57 w/internal alloy cups, ACB bearings 1.1/8" Upper, 1.5" Lower, w/8mm cap
FORK	Rock Shox Recon RL 29B" Solo Air, 140mm, Extl rebnd, low speed comp to lock , 1.5" Alu HT, 15x110 BOOST, 32mm stanchions, magnesium lowers, PM 160mm
SHIFTER	Sram SX Eagle 12sp, trigger single click for e-bike
CRANKSET	Fsa Aluminium crank w/Eagle 34T chainring, length 165mm
BOTTOM BRACKET	Included w/motor unit
CHAIN	Sram SX Eagle 12sp
CASSETTE / FREEWHEEL	Sram PG1210 12sp, 11-50T
BRAKE	Shimano BR-MT520 w/203mm front and rear adapter, resin pad
DISC ROTOR	Shimano SM-RT30 CL, diam. 203mm, Center Lock
FRONT HUB	Shimano HB-MT400-B for Center Lock, 32h, 15x110mm TA
REAR HUB	Shimano FH-MT400-B for Center Lock, 32h, 12x148mm BOOST
RIM/WHEELSET	WTB ST Light i30 TCS 2.0 29î, width 30mm, 32 holes

TIRE	Kenda Hellkat 29x2.6, 60tpi EMC, DTC compound, 66-622 folding
STEM	Tec Obvius, 0°, 1.1/8", diam. 31.8mm, ext: 55mm
HANDLEBAR	Tec Obvius rise, AL6061-T6 double butted, width 780mm, diam. 31.8mm, 15mm rise, 9° backsweep
GRIP / TAPE	T-One Rock T-GP34 single lock grip , TPR, plastic inner body, aluminium clamp
SEATPOST	YSP18JL Dropper seatpost, diam 31.6mm, internal remote cable routing w/remote 1x specific, travel: 100mm-15", 120mm-17", 150mm-19/21"
SADDLE	Tec Rector, 140mm width, Steel rails, Pvc soft touch cover
PEDALS	Fasten NW-91K
MOTOR UNIT	Bianchi Motor Unit 250W 85Nm w/630Wh battery

T-TRONIK SPORT

POSITIONING
Neat and tidy performance e-mtb, with front suspension aluminum frame.

COURSE/TERRAIN
Off-road riding, mountain, hilly courses.

END USE DESTINATION
For the biker who wants to shred just about anything.

KEY FEATURES
- Aluminium frame
- Travel: 120mm
- Motor: Bianchi 250W - 85Nm, 5 level of assistance
- Battery: 418 or 504Wh
- Wheel size: 29x2.35
- Boost 9x141mm QR rear dropout
- Internal cable routing
- 4 sizes (S, M, L, XL)

GEOMETRY

SIZE		A	B1	C	D	E	F	G	G1	H	X	Y	W
S	15"	400	572	470	50	115	712	75,5°	67°	51	410	625	1177
M	17"	440	592	470	50	115	732	75,5°	67°	51	430	627	1197
L	19"	480	613	470	50	120	753	75,5°	67°	51	450	631	1219
XL	21"	520	634	470	50	125	775	75,5°	67°	51	470	635	1241

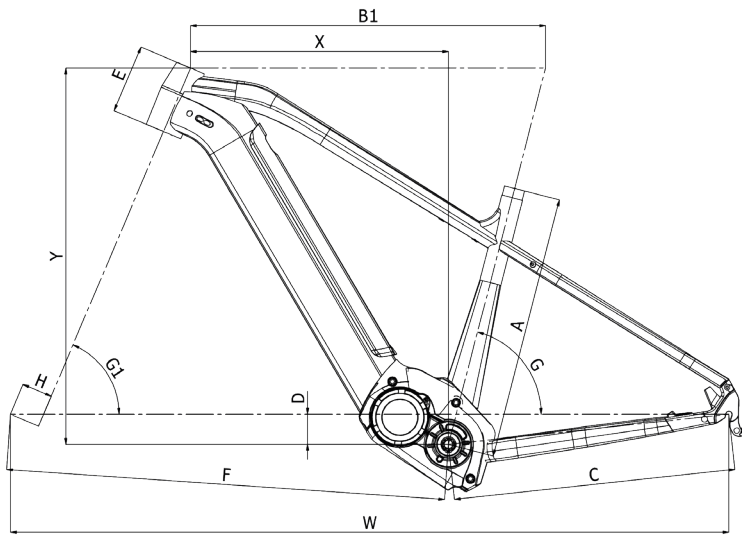

AUTONOMY - BATTERY 418/504WH
Autonomy depends on battery selection

CHARGING TIME
Complete **4.5h** approx.

ASSISTANCE (%)
(1) **50%**
(2) **100%**
(3) **200%**
(4) **300%**
(5) **400%**

POWERED BY
Bianchi

Pedalling assistance is provided by the new Bianchi Central Motor Unit made in Italy, fine-tuned with a mountain bike-specific setup to optimise your bike for rough and off-road riding. The 250W motor is powered by either a 418Wh, or 504Wh battery and has five powerful assistance levels at its disposal.

A heads-up display allows you to keep track of all your important metrics, like speed, power and battery levels, and also flick through your power assist levels – from 50% right up to 400%.

The T-Tronik Sport aluminum frame is perfect for the rough and tumble nature of off-road riding. All of the cables are internally routed, helping to protect them from all the kicked-up mud and grime – not to mention it also makes the bike look incredibly neat and tidy.

T-TRONIK SPORT 9.1 - DEORE 10SP

CODE	YPBU2
COLOR	E9- Black/CK16 Full Glossy, 3P- Black/Dark Graphite Full Glossy
FRAME	T-Tronik Sport HT, alu 6061 triple butted, 1.5" tapered HT, seatpost diam. 31.6mm, seatpost clamp diam. 34.9mm, PM 160mm, Boost dropout QR 12x141mm, internal cable routing, sizes 38-43-48-53cm
SEATPOST CLAMP	MX-95RT alloy diam. 35mm
HEADSET	Fsa Orbit 1.5 ZS #57 w/internal alloy cups, ACB bearings 1.1/8" Upper, 1.5" Lower, w/8mm cap
FORK	SR Suntour XCR34 AIR Boost LOR DS 29" 120mm, with LOR, 1.5" tapered HT, alloy crown, Air spring w/pre-load adjust, 34mm stanchions, PM 180mm disc mount, 15X110 TA
SHIFTER	Shimano Deore SL- M6000 10sp
REAR DERAILLEUR	Shimano Deore RD-M6000-GS Shadow Plus Design 10sp, direct attachment, max 11-42T
CRANKSET	Fsa Alu crank w/34T chainring, 104BCD, length: 165mm
BOTTOM BRACKET	Included w/motor unit
CHAIN	Kmc X10eS EPT finish
CASSETTE / FREEWHEEL	Shimano CS-HG500-10, 11-13-15-18-21-24-28-32-37-42T
BRAKE	Shimano BR-MT401 w/180mm front and rear adapter, resin pad
DISC ROTOR	Shimano SM-RT10 CL, diam. 180mm, Center Lock, for resin pad only
FRONT HUB	Shimano HB-MT400-B for Center Lock, 32h, 15x110mm TA
REAR HUB	Shimano FH-MT200-B for Center Lock, 32h, 141mm BOOST

RIM/WHEELSET	Wtb XC25 TCS rim Tubeless Ready 29", AL6061-T6, 622x25, 32 hole
TIRE	Kenda Slant Six Sport 29x2.35, DTC compound, 60Tpi, ETRTO 60-622
STEM	Tec Obvius forged alloy 6061, +/-7°, 1.1/8", 31.8mm, ext: 60mm-15/19", 70mm-21"
HANDLEBAR	Tec rise, DB Alloy 6061-T6, width 740mm, diam. 31,8mm, 9° backsweep, 15mm rise
GRIP / TAPE	T-One Rock T-GP34 single lock grip , TPR, plastic inner body, aluminium clamp
SEATPOST	Tec AL2014 shaft and alloy head, diam 31.6mm, 0mm setback, length: 350mm-15/17", 400mm-19/21"
SADDLE	Tec Rector, 140mm width, Steel rails, Pvc soft touch cover
MOTOR UNIT	Bianchi Motor Unit 250W 85Nm w/Phylion 504Wh battery

T-TRONIK SPORT 9.2 - ALTUS 9SP

CODE	YPBU1
COLOR	E9 - Black/ CK16 Full Glossy
FRAME	T-Tronik Sport HT, alu 6061 triple butted, 1.5" tapered HT, seatpost diam. 31.6mm, seatpost clamp diam. 34.9mm, PM 160mm, Boost dropout QR 12x141mm, internal cable routing, sizes 38-43-48-53cm
SEATPOST CLAMP	MX-95RT alloy diam. 35mm
HEADSET	Fsa Orbit 1.5 ZS #57 w/internal alloy cups, ACB bearings 1.1/8" Upper, 1.5" Lower, w/8mm cap
FORK	SR Suntour XCM32 Boost NLO DS 29" 120mm, with NLO lockout, 1.5" tapered HT, alloy crown, coil spring w/pre-load adjust, steel 32mm stanchions, alloy lowers w/PM 160mm disc mount, 15X110mm TA
SHIFTER	Shimano SL-M2010-9R 9sp
CRANKSET	Fsa Alu crank w/34T chainring, 104BCD, length: 165mm
BOTTOM BRACKET	Included w/motor unit
CHAIN	Kmc HV900 9sp
CASSETTE / FREEWHEEL	Shimano HG200-9, 11-13-15-17-20-23-26-30-36T
BRAKE	Shimano BR-MT200, w/180mm front and rear adapters, resin pad
DISC ROTOR	Shimano SM-RT10 CL, diam. 180mm, Center Lock, for resin pad only
FRONT HUB	Shimano HB-MT400-B for Center Lock, 32h, 15x110mm TA
REAR HUB	Shimano FH-MT200-B for Center Lock, 32h, 141mm OLD BOOST
RIM/WHEELSET	Wtb XC25 TCS rim Tubeless Ready 29", AL6061-T6, 622x25, 32 hole

TIRE	Kenda Slant Six Sport 29x2.35, DTC compound, 60Tpi, ETRTO 60-622
STEM	TEC Obvius forged alloy 6061, +/-7°, 1.1/8", 31.8mm, ext: 60mm-15/19", 70mm-21"
HANDLEBAR	Tec rise, DB Alloy 6061-T6, width 740mm, diam. 31,8mm, 9° backsweep, 15mm rise
GRIP / TAPE	T-One Rock T-GP34 single lock grip , TPR, plastic inner body, aluminium clamp
SEATPOST	Tec AL2014 shaft and alloy head, diam 31.6mm, 0mm setback, length: 350mm-15/17", 400mm-19/21"
SADDLE	Tec Rector, 140mm width, Steel rails, Pvc soft touch cover
MOTOR UNIT	Bianchi Motor Unit 250W 85Nm w/Phylion 418Wh battery **OPTION BATTERY:** Phylion 504Wh battery

E-CITY

E-SPILLO ACTIVE
E-SPILLO LUXURY
E-SPILLO CLASSIC
E-SPILLO CITY
LONG ISLAND

SHIMANO
DEORE
SHIMANO
EDDARDO

E-SPILLO ACTIVE

POSITIONING
E-City bike with integrated look, rigid or suspension fork and record autonomy.

COURSE/TERRAIN
Road, city and bumpy roads.

END USE DESTINATION
Explore your city, commuting, light touring.

KEY FEATURES
- Gent and lady aluminum frame
- Motor: E-Going centrale 250W – 80Nm, 5 levels of assistance
- Battery: 418Wh
- Autonomy: up to 120km
- Shimano Hydraulic Disc brakes
- Drivetrain: Shimano 1x10v 42T-11/36T
- SR Suntour 63mm travel fork (ACTIVE FS), Alloy fork (ACTIVE)
- Integrated handlebar/stem system with Led display (ACTIVE only)
- Adjustable alloy stem (ACTIVE FS only)
- Front and rear light powered by unit battery
- Internal cable routing
- Dropout with kickstand
- 37mm tire compatible
- Sizes: 43, 47cm (Lady); 47, 51cm (Gent)

AUTONOMY
Up to 120 KM
Battery 418Wh

CHARGING TIME
Complete **4.5h**

ASSISTANCE %
5 Levels of assistance

POWERED BY
EGOING SYSTEM

GEOMETRY

RIGID FRAME / **GENT**

SIZE					
A	B1	BS	D	E	G
470	565	546	60	160	75,5°
510	572	554	60	180	75,5°

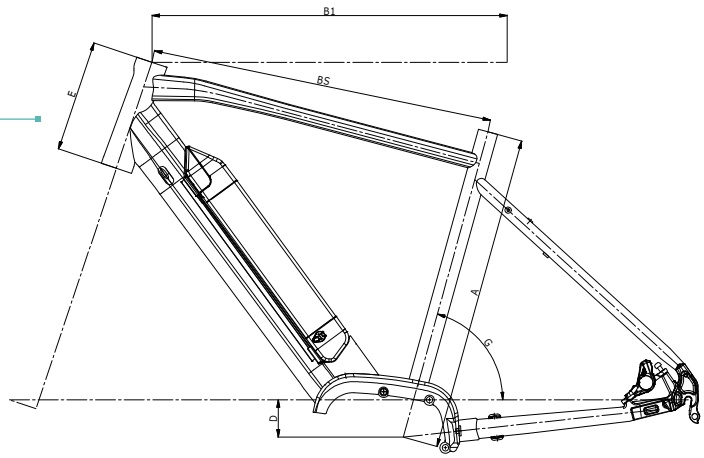

RIGID FRAME / **LADY**

SIZE					
A	B1	BS	D	E	G
430	536	518	60	150	75°
470	546	527	60	160	75°

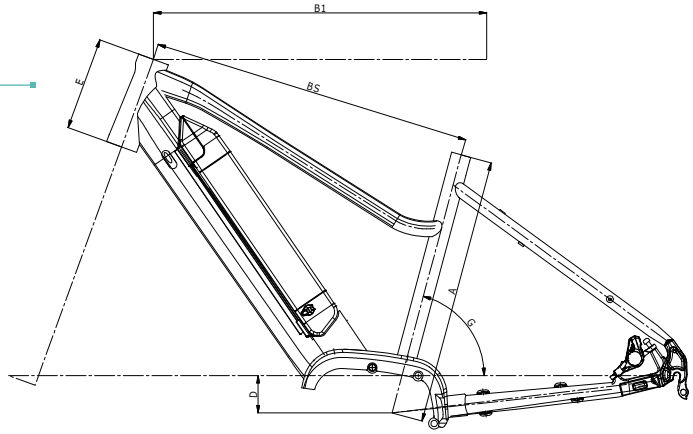

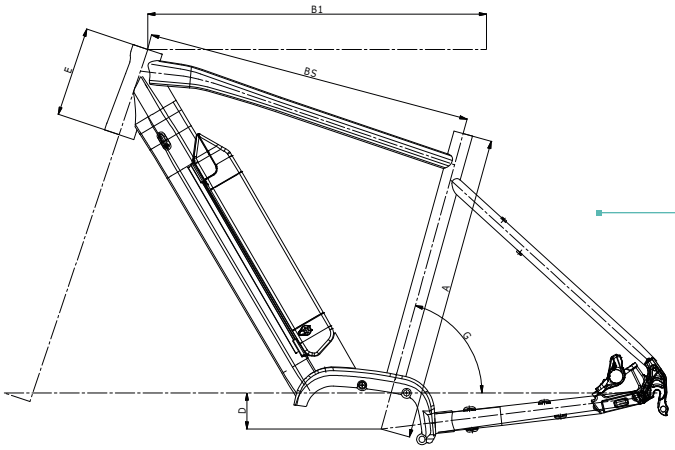

SUSPENSION FRAME / **GENT**

SIZE					
A	B1	BS	D	E	G
470	550	536	60	140	74,5°
510	563	543	60	150	74,5°

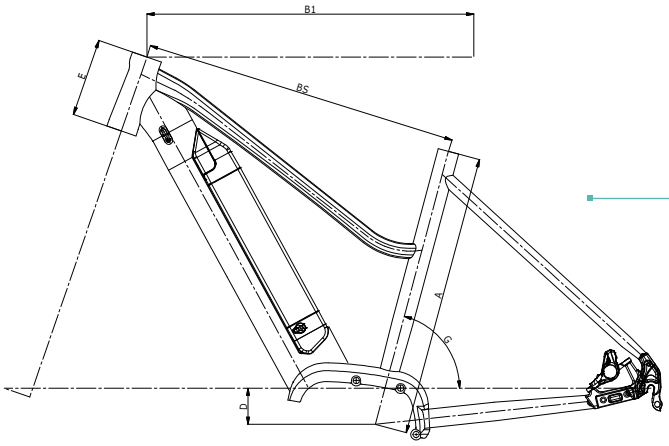

SUSPENSION FRAME / **LADY**

SIZE					
A	B1	BS	D	E	G
430	544	528	60	130	75°
470	544	525	60	130	75°

A SMOOTH RIDE SMOOTHER

The e-Bike specific 63mm Suntour fork takes potholes and bumpy tracks in its stride leaving you sitting pretty up top.

For all day mobility and style the simple to use Shimano 1x 10-speed drivetrain, internallyrouted hydraulic disc brakes and plush 37mm tyres take the strain so you don't have to.

INTEGRATED DISPLAY

An upfront LED display contained within the integrated handlebar and stem provides power output, speed and battery information right where you can see it, keeping your head up and your eyes on the road.

The five assistance levels offered by the E-Going central motor unit make travelling long distances as easy as the flick of a switch. Neatly contained within the downtube, the 418Wh semi-integrated battery has all the power you need, putting up to 250 watts and 80Nm of torque at your fingertips.

AUTONOMY:

120 KM +

E-SPILLO ACTIVE SF GENT - DEORE 10SP

CODE	YPBT8
COLOR	4D - Black/Graphite Full Matt
FRAME	E-Spillo AL6061 frame Gent Disc, size 47-51cm
SEATPOST CLAMP	MX27 Alloy clamp, diam. 31.8mm
HEADSET	Fsa TH-N10P, 1.1/8", semi-integrated
FORK	SR Suntour Nex E25 Disc, 63mm
SHIFTER	Shimano Deore SL-M6000-R 10sp
REAR DERAILLEUR	Shimano Deore RD-M6000 SGS Shadow+ Design, 10sp
CRANKSET	Prowheel w/42T chaingring and chainguard
BOTTOM BRACKET	included w/motor unit
CHAIN	Shimano CN-E6090-10, 10sp
CASSETTE / FREEWHEEL	Shimano CS-HG50-10, 11-36T
BRAKE	Shimano BR-MT200, resin pad
BRAKE LEVER	Shimano BL-MT201
DISC ROTOR	Shimano SM-RT54, diam. 160mm, Center Lock
FRONT HUB	Formula CL-1420 for Center Lock, 36 holes, OLD 100mm
REAR HUB	Formula CL-1422 for Center Lock, 36 holes, OLD 135mm

RIM/WHEELSET	Tec Sport Edition disc, alloy, 700c 622x17, 36h
TIRE	Spectra Pergo Duramax XNR E-bike 700x37
STEM	Aluminium, adjustable, 1.1/8", ext:105mm
HANDLEBAR	Tec Obvius, al6061 db, flat bar, width 620mm, diam. 31.8mm
GRIP / TAPE	Spectra Bio Extra Ergo, 130mm, w/mini bar end
SEATPOST	Tec obvius alloy, diam. 27.2mm, length 350mm
SADDLE	Selle Royal Lookin Athletic
PEDALS	Included
FRONT LIGHT	30 Lux led headlamp
REAR LIGHT	Buchel E-Bike w/brakelight
REAR CARRIER	AtranVelo Sport
KICKSTAND	AtranVelo Stylo, adjustable
MUDGUARD	SKS, Length: front 355mm rear 365mm
MOTOR UNIT	EGoing central motor unit 250W, w/418Wh downtube semi-integrated battery w/speed & torque sensors, pedal assist speed: 25Km/h

E-SPILLO ACTIVE SF LADY - DEORE 10SP

CODE	YPBT9
COLOR	4D- Black/Graphite Full Matt
FRAME	E-Spillo Lady AL6061, Disc, OLD135mm, size: 43-47cm
SEATPOST CLAMP	MX27 Alloy clamp, diam. 31.8mm
HEADSET	Fsa TH-N10P, 1.1/8", semi-integrated
FORK	SR Suntour NEX E25 Disc, 63mm travel, 1.1/8", 700C, OLD 100mm, mudguard ready
SHIFTER	Shimano Deore SL-M6000-R 10sp
REAR DERAILLEUR	Shimano Deore RD-M6000 SGS Shadow+ Design, 10sp
CRANKSET	Prowheel w/42T chaingring and chainguard
CHAIN	Shimano CN-E6090-10, 10sp
CASSETTE / FREEWHEEL	Shimano CS-HG50-10, 11-36T
BRAKE	Shimano BR-MT200, resin pad
BRAKE LEVER	Shimano BL-MT201
DISC ROTOR	Shimano SM-RT54, diam. 160mm, Center Lock
FRONT HUB	Formula CL-1420 Disc, 36h, OLD 100mm, axle 108mm w/Qr
REAR HUB	Formula CL-1422 Disc, 36h, OLD 135mm, axle:146mm w/Qr
RIM/WHEELSET	Tec Sport Edition disc, alloy, 700c 622x17, 36h
TIRE	Spectra Pergo Duramax XNR E-bike 700x37
STEM	Aluminium, Adjustable, 1.1/8", ext:105mm
HANDLEBAR	Tec Obvius, AL6061 DB, Flat bar, width 620mm, diam. 31.8mm
GRIP / TAPE	Spectra Bio Extra Ergo, 130mm, w/mini bar end
SEATPOST	Tec Obvius, Alloy, diam. 27.2mm, length: 350mm
SADDLE	Selle Royal Lookin Athletic

PEDALS	Included
FRONT LIGHT	30 Lux led headlamp
REAR LIGHT	Buchel E-Bike w/brakelight
REAR CARRIER	AtranVelo Sport
KICKSTAND	AtranVelo Stylo, adjustable
MUDGUARD	SKS, Length: front 355mm rear 365mm
MOTOR UNIT	EGoing central motor unit 250W, w/418Wh downtube semi-integrated battery w/speed & torque sensors, pedal assist speed: 25Km/h

E-SPILLO ACTIVE GENT - DEORE 10SP

CODE	YPBT6
COLOR	4D - Black/Graphite Full Matt
FRAME	E-Spillo Aluminium frame Gent Disc, size 47-51cm
SEATPOST CLAMP	MX27 Alloy clamp, diam. 31.8mm
HEADSET	Fsa TH-N10P, 1.1/8", semi-integrated
FORK	Bianchi Aluminium Disc, 1.1/8"
SHIFTER	Shimano Deore SL-M6000-R 10sp
REAR DERAILLEUR	Shimano Deore RD-M6000 SGS Shadow+ Design, 10sp
CRANKSET	Prowheel w/42T chaingring and chainguard
BOTTOM BRACKET	included w/motor unit
CHAIN	Shimano CN-E6090-10, 10sp
CASSETTE / FREEWHEEL	Shimano CS-HG50-10, 11-36T
BRAKE	Shimano BR-MT200, resin pad
BRAKE LEVER	Shimano BL-MT201
DISC ROTOR	Shimano SM-RT54, diam. 160mm, Center Lock
FRONT HUB	Formula CL-1420 for Center Lock, 36 holes, OLD 100mm
REAR HUB	Formula CL-1422 for Center Lock, 36 holes, OLD 135mm
RIM/WHEELSET	Tec Sport Edition disc, alloy, 700c 622x17, 36h
TIRE	Spectra Pergo Duramax XNR E-bike 700x37
STEM	integrated with handlebar (one piece)
HANDLEBAR	Integrated handlebar and stem w/display and usb port
GRIP / TAPE	Spectra Bio Extra Ergo, 130mm, w/mini bar end
SEATPOST	Aluminum diam. 27.2mm, length 350mm
SADDLE	Unisex, steel rails

PEDALS	Included
FRONT LIGHT	30 Lux led headlamp
REAR LIGHT	Buchel E-Bike w/brakelight
REAR CARRIER	AtranVelo Sport
KICKSTAND	AtranVelo Stylo, adjustable
MUDGUARD	SKS, Length: front 355mm rear 365mm
MOTOR UNIT	EGoing central motor unit 250W, w/418Wh downtube semi-integrated battery w/speed & torque sensors, pedal assist speed: 25Km/h

E-SPILLO ACTIVE LADY - DEORE 10SP

CODE	YPBT7
COLOR	4D - Black/Graphite Full Matt
FRAME	E-Spillo Aluminium frame Lady Disc, size 43, 47cm
SEATPOST CLAMP	MX27 Alloy clamp, diam. 31.8mm
HEADSET	Fsa TH-N10P, 1.1/8", semi-integrated
FORK	Bianchi Aluminium Disc, 1.1/8"
SHIFTER	Shimano Deore SL-M6000-R 10sp
REAR DERAILLEUR	Shimano Deore RD-M6000 SGS Shadow+ Design, 10sp
CRANKSET	Prowheel w/42T chaingring and chainguard
BOTTOM BRACKET	Included w/motor unit
CHAIN	Shimano CN-E6090-10, 10sp
CASSETTE / FREEWHEEL	Shimano CS-HG50-10, 11-36T
BRAKE	Shimano BR-MT200, resin pad
BRAKE LEVER	Shimano BL-MT201
DISC ROTOR	Shimano SM-RT54, diam. 160mm, Center Lock
FRONT HUB	Formula CL-1420 for Center Lock, 36 holes, OLD 100mm
REAR HUB	Formula CL-1422 for Center Lock, 36 holes, OLD 135mm
RIM/WHEELSET	Tec Sport Edition disc, alloy, 700c 622x17, 36h
TIRE	Spectra Pergo Duramax XNR E-bike 700x37
STEM	integrated with handlebar (one piece)
HANDLEBAR	Integrated handlebar and stem w/display and USB port
GRIP / TAPE	Spectra Bio Extra Ergo, 130mm, w/mini bar end
SEATPOST	Aluminium diam. 27.2mm, length 350mm
SADDLE	Unisex, steel rails

PEDALS	Included
FRONT LIGHT	30 Lux led headlamp
REAR LIGHT	Buchel E-Bike w/brakelight
REAR CARRIER	AtranVelo Sport
KICKSTAND	AtranVelo Stylo, adjustable
MUDGUARD	SKS, Length: front 355mm rear 365mm
MOTOR UNIT	EGoing central motor unit 250W, w/418Wh downtube semi-integrated battery w/speed & torque sensors, pedal assist speed: 25Km/h

E-SPILLO LUXURY

POSITIONING
Smart city e-Bike with aluminum frame and central motor unit as a reminiscent of timeless Italian design.

COURSE/TERRAIN
Urban roads.

END USE DESTINATION
Urban commuting, weekend trekking.

KEY FEATURES
- Aluminum frame (GENT/LADY) with steel fork
- Motor: Shimano Steps E5000 250W – 40Nm, 3 levels of assistance
- Battery: 418Wh
- Autonomy: up to 120km
- Shimano Hydraulic Disc brakes
- Drivetrain: Shimano 1x9sp 44T-11/34T
- Internal cable routing
- Kickstand predisposition
- Rear light integrated in motor unit battery
- 37mm tire compatible
- Adjustable alloy stem
- Sizes: 43, 47cm (LADY), 47, 51cm (GENT)

AUTONOMY
Up to 120 KM

Battery 418Wh

CHARGING TIME
Complete **4,5h**

ASSISTANCE
3 levels of assistance:
- **Eco**
- **Normal**
- **High**

GEOMETRIES

/ GENT

SIZE					
A	B1	BS	D	E	G
470	575	554	65	120	73,5°
530	586	573	65	130	73,5°

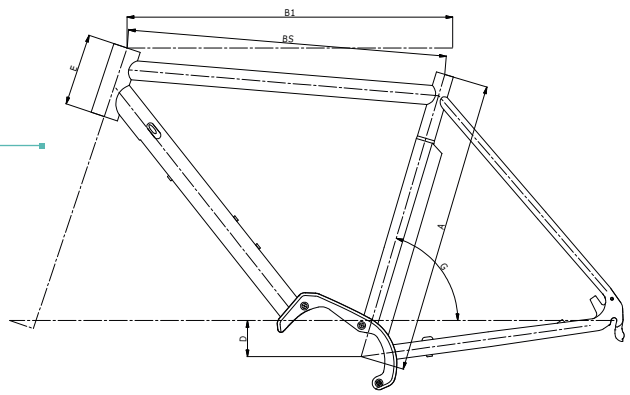

/ LADY

SIZE					
A	B1	BS	D	E	G
430	560	535	65	140	73°
470	570	546	65	150	73°

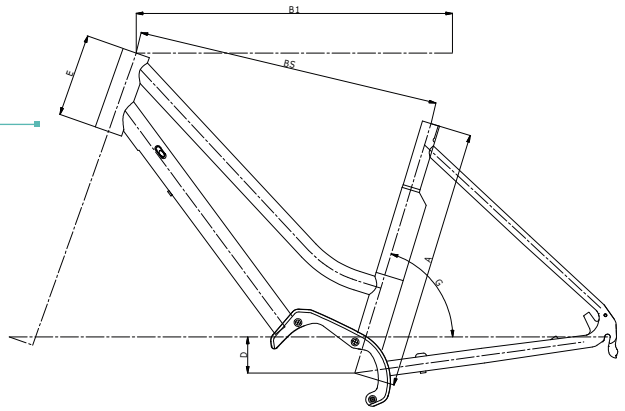

SMART BATTERY

The custom rear-integrated 418Wh slim battery is detachable and easily stored in a backpack thanks to its reduced dimensions.

The kick-stand adds more user-friendly and versatile character.

The geometry encourages an upright position (so your torso is at an angle of between 75-90° to the ground). Its customisability is optimised for a varied lifestyle via an adjustable alloy stem.

E-SPILLO LUXURY GENT - ALTUS 9SP

CODE	YPBT4
COLOR	1D - CK16 glossy, SL - Gun Barrel Grey/ Black Full Matt
FRAME	E-Spillo Aluminium frame Gent Disc, sizes: 47-53cm
SEATPOST CLAMP	MX-112 Alloy, diam. 31,8mm
HEADSET	VP-MH305C semi-integrated, threaded
FORK	Bianchi Steel, 1.1/8" Disc
SHIFTER	Shimano Altus SL-M2000 9sp
REAR DERAILLEUR	Shimano Altus RD-M2000 SGS 9sp, Shadow Design
CRANKSET	Shimano FC-E5000, w/44T chainring, length 170mm
BOTTOM BRACKET	included w/motor unit
CHAIN	Shimano E-6070 9sp
CASSETTE / FREEWHEEL	Shimano CS-HG200-9, 9sp, 11-13-15-17-20-23-26-30-36T
BRAKE	Shimano BR-MT200, resin pad
BRAKE LEVER	Shimano BL-MT201
DISC ROTOR	Shimano SM-RT30, diam. 160mm, for resin pad only
FRONT HUB	Formula CL-1420, 36h, Center Lock, w/Qr
REAR HUB	Formula CL-1422, 36h, OLD 135mm, 14x36x135x145mm
RIM/WHEELSET	Alloy, Disc, 700c 622x17, 36 holes
TIRE	Spectra Unda Duramax Regular 700x37, 60tpi
STEM	Aluminium adjustable, diam. 25.4mm, ext:85mm, quill length: 180mm
HANDLEBAR	Aluminium, width: 590mm, diam. 25.5mm, 33° backsweep, 26mm rise
GRIP / TAPE	Hard plastic black/Gel, 130mm

SEATPOST	AL6061 shaft, alloy head, 15mm offset, diam. 27,2mm, length 350mm
SADDLE	Selle Royal Wave, steel rails
PEDALS	Included
FRONT LIGHT	Retro Sport Led, 0.5W, 20 lux, Waterproof IP44, motor unit battery powered
REAR LIGHT	included in the battery
REAR CARRIER	AtranVelo Sport 28" Aluminium
KICKSTAND	AtranVelo Stylo, adjustable
MUDGUARD	Steel
MOTOR UNIT	Shimano Steps E5000 w/Drive Unit DU-E5000, w/Cycle Computer SC-E6100, w/switch SW-E7000-L, w/speed sensor, w/418Wh battery

E-SPILLO LUXURY LADY - ALTUS 9SP

CODE	YPBT5
COLOR	1D - CK16 glossy, SL - Gun Barrel Grey/Black Full Matt
FRAME	E-Spillo Aluminium frame Lady Disc, sizes: 43-47cm
SEATPOST CLAMP	MX-112 Alloy, diam. 31,8mm
HEADSET	VP-MH305C semi-integrated, threaded
FORK	Bianchi Steel Disc, 1.1/8"
SHIFTER	Shimano Altus SL-M2000 9sp
REAR DERAILLEUR	Shimano Altus RD-M2000 SGS 9sp, Shadow Design
CRANKSET	Shimano FC-E5000, w/44T chainring, length: 170mm
BOTTOM BRACKET	included w/motor unit
CHAIN	Shimano E-6070 9sp
CASSETTE / FREEWHEEL	Shimano CS-HG200-9, 9sp, 11-13-15-17-20-23-26-30-36T
BRAKE	Shimano BR-MT200, resin pad
BRAKE LEVER	Shimano BL-MT201
DISC ROTOR	Shimano SM-RT30, diam. 160mm, resin pad only
FRONT HUB	Formula CL-1420, 36h, Center Lock, w/QR
REAR HUB	Formula CL-1422, 36h, OLD 135mm, 14x36x135x145mm
RIM/WHEELSET	Alloy, Disc, 700c 622x17, 36 holes
TIRE	Spectra Unda Duramax Regular 700x37, 60tpi
STEM	Aluminium adjustable, diam. 25.4mm, ext:85mm, quill length: 180mm
HANDLEBAR	Aluminium, width 590mm, diam 25.4mm, 33° backsweep, 26mm rise
GRIP / TAPE	Hard plastic black/Gel, 130mm

SEATPOST	AL6061 shaft, alloy head, 15mm offset, diam.27.2mm, length 350mm
SADDLE	Selle Royal Wave, steel rails
PEDALS	Included
FRONT LIGHT	Retro Sport Led, 0.5W, 20 lux, Waterproof IP44, motor unit battery powered
REAR LIGHT	included in the battery
REAR CARRIER	AtranVelo Sport 28", Aluminium
KICKSTAND	AtranVelo Stylo, adjustable
MUDGUARD	Steel
MOTOR UNIT	Shimano Steps E5000 w/Drive Unit DU-E5000, w/Cycle Computer SC-E6100, w/switch SW-E7000-L, w/speed sensor, w/418Wh battery

E-SPILLO CLASSIC

POSITIONING
Urban e-Bike with aluminum frame, blending classic aesthetics with future-facing pedal assist.

COURSE/TERRAIN
Urban roads.

END USE DESTINATION
Urban commuting, weekend trekking.

KEY FEATURES
- Aluminum frame (GENT/LADY) with steel fork
- Motor: E-Going Front hub unit 250W - 28Nm, 5 levels of assistance
- Battery: 418Wh
- Autonomy: up to 70km
- V-Brakes
- Drivetrain: Shimano 1x7sp 48T-12/32T
- Internal cable routing
- Kickstand predisposition
- Rear light integrated in motor unit battery
- 37mm tire compatible
- Adjustable alloy stem
- Sizes: 43, 47cm (LADY), 47, 51cm (GENT)

AUTONOMY
Up to 70 KM

Battery 418Wh

CHARGING TIME
Complete **4.5h**

ASSISTANCE
(1) **12,5Km/h**
(2) **17,5Km/h**
(3) **21Km/h**
(4) **23Km/h**
(5) **25Km/h**

POWERED BY
EGOING SYSTEM

GEOMETRIES

/ GENT

SIZE					
A	B1	BS	D	E	G
470	575	555	65	120	73,5°
530	585	573	65	130	73,5°

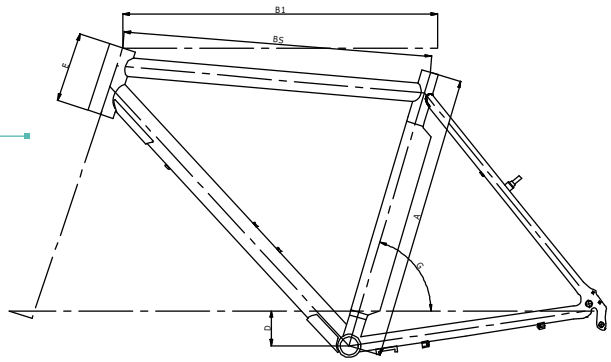

/ LADY

SIZE					
A	B1	BS	D	E	G
430	560	535	65	140	73°
470	570	546	65	150	73°

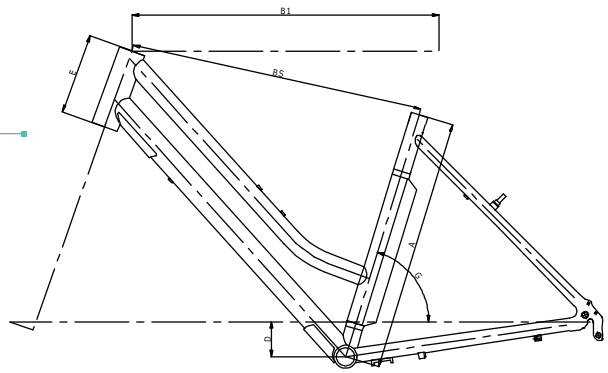

FORM & FUNCTION

The E-Spillo Classic is available in two frame shapes for both men and women; the 'Gent' has a traditional flat top tube, while the 'Lady' features a step-through frame.

VERSATILITY & EASE

You can safely prop your bike up with the handy kickstand while you chat. With wide 37mm tires, a Shimano 1x7 speed drivetrain and V-brakes all neatly routed internally the E-Spillo is perfectly crafted for your busy city life.

E-SPILLO CLASSIC GENT - ALTUS 7SP

CODE	YPBT2
COLOR	1D - CK16 Glossy, SL - Gun Barrel Grey/Black Full Matt
FRAME	E-Spillo Aluminium frame Gent, 700c, V-Brake, size: 47-53cm
SEATPOST CLAMP	MX-112 Alloy, diam. 31,8mm
HEADSET	VP-MH305C semi-integrated, threaded
FORK	Bianchi Steel, V-Brake
SHIFTER	Shimano Altus SL-M310R 7sp
REAR DERAILLEUR	Shimano Altus RD-M310-L, 7sp, Direct Attachment
CRANKSET	Prowheel Ounce-248AC, w/48T chaingring, length: 170mm
BOTTOM BRACKET	Axle length: 119mm w/speed sensor cable
CHAIN	KMC HV700
CASSETTE / FREEWHEEL	Shimano CS-HG200-7, 12-14-16-18-21-26-32T
BRAKE	TX-121L, V-Brake
BRAKE LEVER	Aluminium. 4 fingers
FRONT HUB	EGoing motor unit
REAR HUB	Formula FM-32, 36hole, 14G, OLD 135mm axle 145mm, w/ QR
RIM/WHEELSET	Spectra 622-19, 36 holes
TIRE	Spectra Unda Duramax Regular 700x37, 60Tpi
STEM	Aluminium adjustable, diam 25.4mm, ext:85mm, quill ext: 180mm
HANDLEBAR	Alloy, width 590mm, rise 26mm, diam. 25.4mm, 33° backsweep

GRIP / TAPE	Hard plastic black/Gel, 130mm
SEATPOST	Aluminium diam.27.2mm, length:350mm
SADDLE	Selle Royal Wave, steel rails
PEDALS	included
FRONT LIGHT	Retro Sport Led, 0.5W, 20 lux, Waterproof IP44, motor unit battery powered
REAR LIGHT	included in the battery
REAR CARRIER	AtranVelo Sport 28" Aluminium
KICKSTAND	AtranVelo Rex adjustable
MUDGUARD	Steel
MOTOR UNIT	EGoing SYXC front hub Motor Unit, w/418Wh Lithium battery, w/Led Display, w/Controller, w/Speed Sensor

E-SPILLO CLASSIC LADY - 7SP

CODE	YPBT3
COLOR	1D - CK16 glossy, SL - Gun Barrel Grey/ Black Full Matt
FRAME	E-Spillo Aluminium frame Lady, 700C, V-Brake, size: 43-47cm
SEATPOST CLAMP	MX-112 Alloy, diam. 31,8mm
HEADSET	VP-MH305C semi-integrated, threaded
FORK	Bianchi Steel, V-Brake
SHIFTER	Shimano Altus SL-M310R 7sp
REAR DERAILLEUR	Shimano Altus RD-M310-L, 7sp, Direct Attachment
CRANKSET	Prowheel Ounce-248AC, w/48T chainring, crank length: 170mm
BOTTOM BRACKET	Axle length: 119mm w/speed sensor cable
CHAIN	KMC HV700
CASSETTE / FREEWHEEL	Shimano CS-HG200-7, 12-14-16-18-21-26-32T
BRAKE	TX-121L, V-Brake
BRAKE LEVER	Aluminium, 4 fingers
FRONT HUB	EGoing motor unit
REAR HUB	Formula FM-32, 36holes, 14G, OLD 135mm, axle 145mm, w/QR
RIM/WHEELSET	Spectra 622-19, 36 holes
TIRE	Spectra Unda Duramax Regular 700x37, 60Tpi
STEM	Aluminium adjustable, diam 25.4mm, ext:85mm, quill ext: 180mm
HANDLEBAR	Alloy, width 590mm, rise 26mm, diam. 25.4mm, 33° backsweep

GRIP / TAPE	Hard plastic black/Gel, 130mm
SEATPOST	Aluminium diam.27.2mm, length:350mm
SADDLE	Selle Royal Wave, steel rails
PEDALS	Included
FRONT LIGHT	Retro Sport Led, 0.5W, 20 lux, Waterproof IP44, motor unit battery powered
REAR LIGHT	included in the battery
REAR CARRIER	AtranVelo Sport 28" Aluminium
KICKSTAND	AtranVelo Rex adjustable
MUDGUARD	Steel
MOTOR UNIT	EGoing SYXC front hub Motor Unit, w/418Wh Lithium battery, w/Led Display, w/Controller, w/Speed Sensor

E-SPILLO CITY

POSITIONING
City e-bike with aluminum step-through frame, one-size-fits-all.

COURSE/TERRAIN
Urban roads.

END USE DESTINATION
Urban commuting, daily use.

KEY FEATURES
- Aluminum frame (one size) with steel fork
- Motor: E-Going Front hub unit 250W - 28Nm, 3 levels of assistance
- Battery: 317Wh
- Autonomy: up to 55km
- V-Brakes
- Drivetrain: Shimano 1x7sp 38T-12/32T
- Internal cable routing
- Kickstand predisposition
- Rear light integrated in motor unit battery
- 40mm tire compatible
- Adjustable alloy stem
- One size: 45cm

AUTONOMY
Up to 55 KM
Battery 317Wh

CHARGING TIME
Complete **3.5h**

ASSISTANCE
3 levels of assistance

POWERED BY
EGOING SYSTEM

GEOMETRY

SIZE					
A	B1	BS	D	E	G
450	576	551	65	170	70°

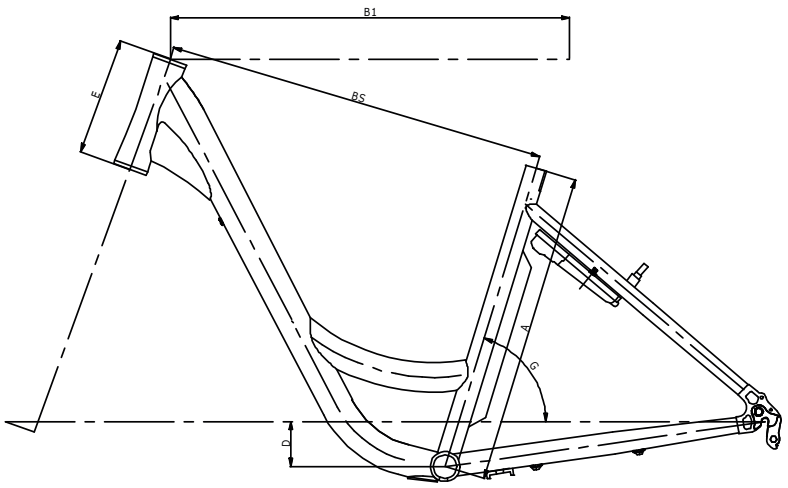

The comfortable riding position allows you to sit with your torso at an angle between 75° - 90° to the ground. The Shimano 1x7-speed drivetrain give you plenty of choice between gears.

The rear light, powered by the battery, enhances your visibility when the sun goes down.

The brake cables are routed internally within the frame, reducing the chances of loose clothing and luggage getting snagged. The kickstand allows you to store the bike easily with just the kick of your heel.

E-SPILLO CITY LADY - ALTUS 7SP

CODE	YPBT1
COLOR	SO - Gun Barrel Grey/Black Full Glossy
FRAME	E-Spillo Aluminium frame Lady, 700C, V-Brake, size 45cm
SEATPOST CLAMP	MX27, diam 31.8mm
HEADSET	VP MH-501, threaded
FORK	Bianchi Steel, 700C, 1.1/8", V-Brake
SHIFTER	Shimano Altus SL-M310R 7sp
REAR DERAILLEUR	Shimano Altus RD-M310 SGS 7sp
CRANKSET	Aluminium crank w/38T chainring, length 170mm
BOTTOM BRACKET	Axle length: 119mm w/speed sensor cable
CHAIN	Kmc HV700 7sp
CASSETTE / FREEWHEEL	Shimano CS-HG200-7, 12-14-16-18-21-26-32T
BRAKE	TX-121L V-Brake
BRAKE LEVER	Aluminium, 4 fingers
FRONT HUB	EGoing Motor Unit
REAR HUB	Shimano FH-TY500-7-QR, 36 holes
RIM/WHEELSET	Spectra 622-19, 36 holes
TIRE	Spectra Pergo Duramax Regular 700x40, 40-622, 27TPI
STEM	Aluminium adjustable diam 25.4mm, ext:85mm, quill ext: 180mm
HANDLEBAR	Aluminium, width 600mm, diam. 25.4mm, 44° backsweep, 40mm rise
GRIP / TAPE	Herrmans 84B Ergo 120 mm
SEATPOST	Aluminium diam.27.2mm, length:350mm
SADDLE	Spectra Lubri Unisex, steel rails

PEDALS	Included
FRONT LIGHT	Breeze Evo Classic, 0,5W LED, 15 lux, Waterproof IP44, batteries included
REAR LIGHT	included in the battery
REAR CARRIER	Spectra w/battery support
KICKSTAND	AtranVelo Rex adjustable
MUDGUARD	Steel, 28"
MOTOR UNIT	EGoing front hub Motor Unit 250W 37V, w/318Wh 36V battery w/Led Display, w/Controller

LONG ISLAND

POSITIONING
Perfect combination between e-mobility and style. Frame designed to offer safer and more comfortable driving experience. The Bianchi motor unit is made in Italy.

COURSE / TERRAIN
Urban roads.

END USE DESTINATION
Designed to simplify your city commuting. A simple solution to urban travel.

KEY FEATURES
- Aluminum step through frame with steel fork
- Motor: Bianchi 250W - 80Nm, 5 levels of assistance
- Battery: 418Wh
- Autonomy: up to 130km
- Shimano Hydraulic Disc Brakes
- Drivetrain: Shimano 1x9v 38T-11/36T
- Semi-integrated headset 1.1/8"
- Internal cable routing
- Rear dropout with kickstand predisposition
- Front and rear light motor unit battery powered EU and German approved
- Adjustable alloy stem 0°>90° and Alloy flat handlebar w/wing shape
- Sizes: 43, 47cm

AUTONOMY
Up to 130 KM
Battery **418Wh**

CHARGING TIME
Complete **4.5h**

ASSISTANCE %
(1) **50%**
(2) **100%**
(3) **200%**
(4) **300%**
(5) **400%**

POWERED BY
Bianchi

GEOMETRY

SIZE												
A	B1	C	D	E	F	G	G1	H	I	X	Y	WB
430	607	470	60	180	679	75.5°	72°	45	412	431	603	1142
470	636	470	60	180	679	73°	72°	45	412	431	603	1142

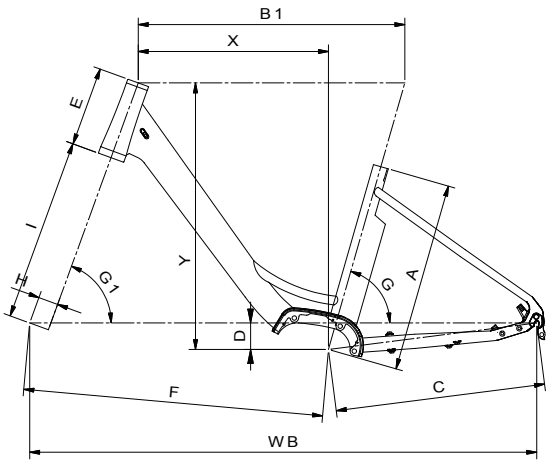

Pedaling assistance is provided by a Bianchi Central Motor Unit made in Italy and powered by a 418Wh battery. With five modes, from 50% assist right up to 400%, the Long Island is well equipped to aid you up even the steepest of inner-city inclines.
If used economically, the Long Island's range is 130km.

The rear rack not only allows for the use of additional luggages, but also is the location of the removable battery, easy to carry with you wherever you go. The bike's lights are powered by the motor unit battery – allowing you to ride in low-light conditions safely and confidently.

The riser handlebars and adjustable stem combine to create a bike that is extremely comfortable and customizable. The step-through frame design makes it easy to climb in and out of the saddle.

LONG ISLAND - ALTUS 9SP

CODE	YPB7Z
COLOR	2A - CK16/Black full glossy, 8K - Black/Graphite full glossy
FRAME	Long Island Alloy 6061 step thru frame, Disc, 700c, size: 43- 47cm
SEATPOST CLAMP	339QX Alloy clamp, diam. 34,9mm
HEADSET	Fsa ZS4-Custom 1.1/8" w/15mm Alu cap
FORK	Bianchi Steel Disc, 700c
SHIFTER	Shimano Altus SL-M2000 9sp
REAR DERAILLEUR	Shimano Altus RD-M2000 SGS 9sp, Shadow Design, direct attachement
CRANKSET	Fsa Metropolis, solid forged alloy, ISIS, crank length: 170mm w/38T chainring
BOTTOM BRACKET	Integrated with drive unit
CHAIN	Kmc Z-99
CASSETTE / FREEWHEEL	Shimano CS-HG200-9, 11-13-15-17-20-23-26-30-36T
BRAKE	Shimano BR-MT200, resin pad
BRAKE LEVER	Shimano BL-MT200
DISC ROTOR	Shimano SM-RT10, 160mm, Center Lock , for resin pad only
FRONT HUB	Formula CL-1420 Center lock, 36hole, 14G, OLD 100mm, w/QR

REAR HUB	Formula CL-1422 Center lock, 36hole, 14G, OLD 135mm w/ QR
RIM/WHEELSET	Tec Sport Edition ATD470 disc, alloy, 700c 622x17, 36h
TIRE	Spectra Pergo 40-622, 60TPI, w/reflective inserts
STEM	Satori 3D forged Alloy, Adjustable stem 0°-90°, 1.1/8", ext: 90mm
HANDLEBAR	Satori AL6061, width 660mm, rise 34mm, backsweep 41°
GRIP / TAPE	Bianchi Black w/Gel, w/Black Carbon PU cover and Bianchi logo
SEATPOST	TranzX AL6061 shaft, alloy head, 15mm offset, diam. 30.9mm, length 350mm
SADDLE	Selle Royal Aurorae Elastomer
PEDALS	Included
FRONT LIGHT	Spanniga Axendo 40, 40 Lux, 1 white Led
REAR LIGHT	integrated in the battery
REAR CARRIER	Alloy, w/Battery cover and alu stays
KICKSTAND	Alloy, adjustable
MUDGUARD	700c, Pvc, width 50mm, w/V Type Stays stainless steel
MOTOR UNIT	Bianchi Central Motor Unit 36V - 250W - 80Nmw/418Wh 36v 11.6Ah Battery w/torque sensor,cadence sensor and speed sensor, w/digital display.Max speed 25kmh

8K - Black/Graphite full glossy

CITY FITNESS+

C-SPORT SPILLO

RUNNING
Bianchi

C-SPORT

C-SPORT
C-SPORT CROSS

C-SPORT

POSITIONING
Performance fitness bike with light aluminum frame, perfect for pursuing a healthy lifestyle.

COURSE/TERRAIN
Asphalt, smooth gravel roads.

END USE DESTINATION
Urban riding or trekking. Ideal for building fitness.

KEY FEATURES
- Lightweight aluminum frame for men and women
- Flat handlebar
- Heads-up riding position

LIGHTWEIGHT ●●●●●○○○○○
DESIGN ●●●●●●○○○○
COMFORT ●●●●●●○○○○
PERFORMANCE ●●●●●●○○○○

GEOMETRY - C-SPORT **GENT** DISC BRAKE

SIZE	A	B1	BS	C	D	E	G	G1
S	430	525	507	435	68	125	74.5°	71°
M	470	545	525	435	68	135	74°	71°
L	510	565	544	435	68	155	73.5°	71.5°
XL	550	585	563	435	68	185	73°	71°
XXL	590	605	585	435	68	210	73°	72°

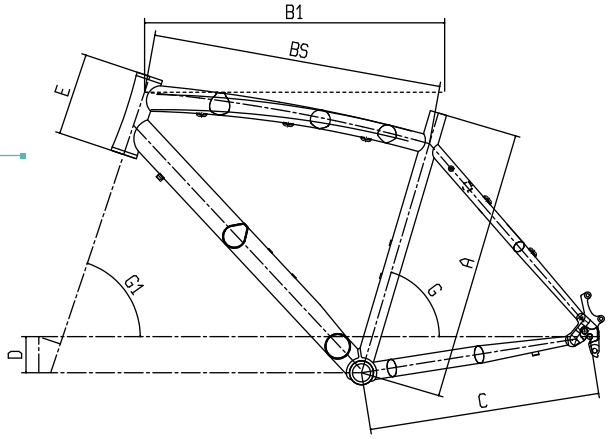

GEOMETRY - C-SPORT **LADY** DISC BRAKE

SIZE	A	B1	BS	C	D	E	G	G1
S	480	525	508	435	68	125	74.5°	71°
M	470	545	524	435	68	135	74°	71°
L	510	565	542	435	68	155	73.5°	71.5°

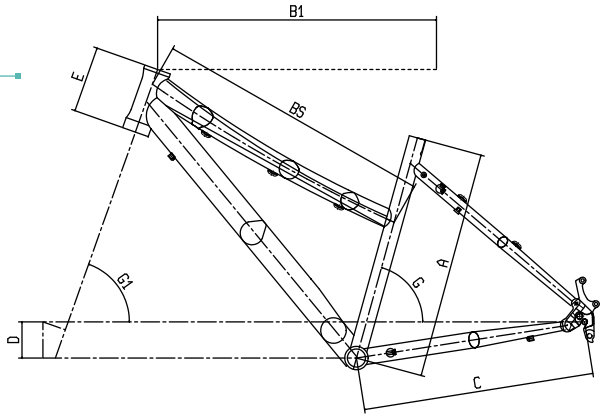

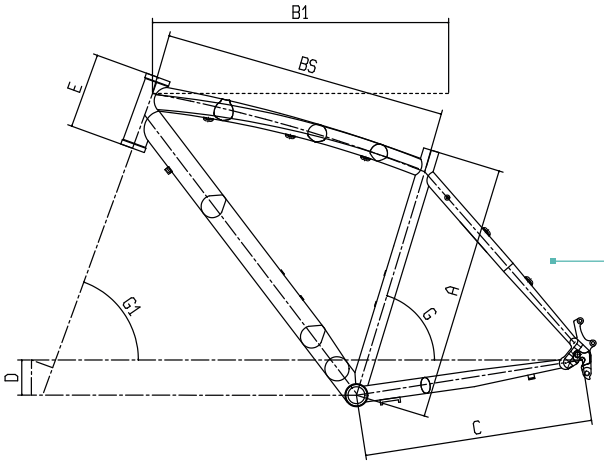

GEOMETRY - C-SPORT CROSS **GENT** DISC BRAKE

SIZE	A	B1	BS	C	D	E	G	G1
S	430	525	545	455	65	140	73°	70°
M	470	575	550	455	65	140	73°	70°
L	510	590	564	455	65	150	73°	70°
XL	550	605	580	455	65	170	73°	70°

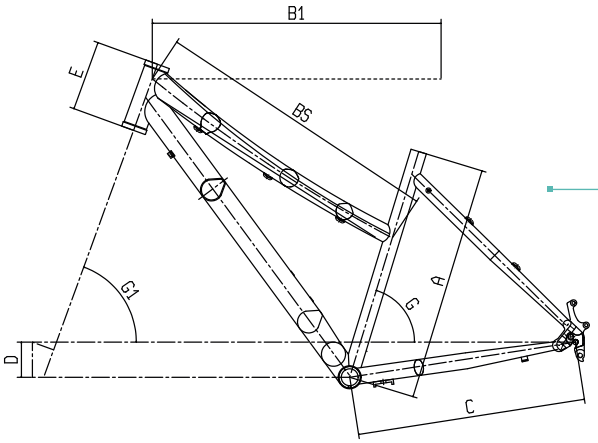

GEOMETRY - C-SPORT CROSS **LADY** DISC BRAKE

SIZE	A	B1	BS	C	D	E	G	G1
S	430	565	562	455	65	140	73°	70°
M	470	575	573	455	65	140	73°	70°

C-SPORT 3 - ALIVIO 2X9SP HYDR. DISC

CODE	YPB55
COLOR	C1 - CK16/Black-White full matt, KW - Black/White-CK16 full matt
FRAME	C-Sport Gent alu disc, 700C Old 135mm, integrated cable routing, Smooth welding, 1.1/8" headtube (semi-integrated down HT tube and integrated in top HT tube). Seat tube 31.6mm, size: 43,47,51,55,59cm
SEATPOST CLAMP	MX-112C alloy, diam. 31,8mm
HEADSET	Fsa No.8B/ZS4D 1.1/8" Semi-Integrated lower part + Integrated upper part, w/cap 15mm
FORK	Bianchi Alu Disc, 1.1/8", Post mount, max tire size 700x40c
SHIFTER	Shimano Alivio SL-M4010 2x9sp
REAR DERAILLEUR	Shimano Alivio RD-T4000-SGS 9sp, top normal, direct attachment
FRONT DERAILLEUR	Shimano Acera FD-T3000-2-TS3, top swing w/34.9mm clamp, dual pull, 63-68°, for 46T, CL:48.8mm
CRANKSET	Shimano FC-MT210-2 46x30T, crank length:170mm-43/47cm, 175mm-51/59cm
BOTTOM BRACKET	Fsa BB7420ST, 113MM
CHAIN	Kmc Z-99 9sp
CASSETTE / FREEWHEEL	Shimano CS-HG200-9, 11-13-15-17-20-23-26-30-36T
BRAKE	Shimano Altus BR-MT200, post mount, resin pad
BRAKE LEVER	Included w/brakeset
DISC ROTOR	Shimano SM-RT10, 160mm, Center Lock , for resin pad only
FRONT HUB	Formula CL-1420 Center Lock, 32 hole, OLD. 100mm Axle 108mm with QR

REAR HUB	Formula CL-1422 Center lock, 32hole, OLD 135mm Axle 145mm, Shimano freewheel body, with QR
RIM/WHEELSET	Alex Rims ATD470 disc, alloy, 700c 622x17, 32h, pair spoke 2x16
TIRE	Kenda Kwick Tendril 700x35, 60TPI, w/3mm Kshield antipuncture insert
STEM	3D forged AL6061, 12°, 31.8mm, 1.1/8", Ext: 70mm-43cm, 100mm-47/51cm, 120mm-55/59cm
HANDLEBAR	Alloy 6061 DB, flat bar, width: 620mm, 9° bend, 31.8mm
GRIP / TAPE	Bianchi Ergonomic Double density, Black/CK
SEATPOST	AL6061 shaft, alloy head, 15mm offset, diam. 31.6mm, length 350mm
SADDLE	Bianchi, steel rail, w/high density foam, Black/CK
PEDALS	included

C-SPORT 2 - ACERA 24SP HYDR. DISC

CODE	YPBD3
COLOR	C1 - CK16/Black-White full matt, KW - Black/White-CK16 full matt
FRAME	C-Sport Gent alu disc, 700C Old 135mm, integrated cable routing, Smooth welding, 1.1/8" headtube (semi-integrated down HT tube and integrated in top HT tube). Seat tube 31.6mm, size: 43,47,51,55,59cm
SEATPOST CLAMP	MX-112C alloy, diam. 31,8mm
HEADSET	Fsa No.8B/ZS4D 1.1/8" Semi-Integrated lower part + Integrated upper part, w/cap 15mm
FORK	Bianchi Alu Disc, 1.1/8", Post mount, max tire size 700x40c
SHIFTER	Shimano ST-EF505 3x8sp
REAR DERAILLEUR	Shimano Acera RD-M360-L SGS 8sp, direct attachment
FRONT DERAILLEUR	Shimano Tourney FD-TY700-TS3, Top swing, dual pull, band type 34.9mm, 63-66°, for 42T, CL: 47.5/50mm
CRANKSET	Shimano FC-TY301 42x34x24T, crank length: 170mm-43/47cm, 175mm-51/59cm
BOTTOM BRACKET	Shimano BB-UN100, Asse:122.5mm(D-NL), Shell:BSA 68mm
CHAIN	Kmc Z-72 8sp
CASSETTE / FREEWHEEL	Shimano CS-HG200-8, 12-14-16-18-21-24-28-32T
BRAKE	Shimano BR-MT200, Resin pad
BRAKE LEVER	Included w/brakeset
DISC ROTOR	Shimano SM-RT10, 160mm, Center Lock , for resin pad only
FRONT HUB	Formula CL-1420 Center Lock, 32 hole, OLD. 100mm Axle 108mm with QR
REAR HUB	Formula CL-1422 Center lock, 32hole, OLD 135mm Axle 145mm, Shimano freewheel body, with QR
RIM/WHEELSET	Alex Rims ATD470 disc, alloy, 700c 622x17, 32h, pair spoke 2x16
TIRE	Kenda Eurotrek 700x35, 60TPI, Wire Bead, w/3mm Kshield antipuncture insert
STEM	3D forged AL6061, 12°, 31.8mm, 1.1/8", Ext: 70mm-43cm, 100mm-47/51cm, 120mm-55/59cm
HANDLEBAR	Alloy 6061 DB, flat bar, width: 620mm, 9° bend, 31.8mm
GRIP / TAPE	Bianchi Ergonomic Double density, Black/CK
SEATPOST	AL6061 shaft, alloy head, 15mm offset, diam. 31.6mm, length 350mm
SADDLE	Bianchi, steel rail, w/high density foam, Black/CK
PEDALS	included

C-SPORT 2 DAMA - ACERA 24SP HYDR. DISC

CODE	YPBD9
COLOR	C1 - CK16/Black-White full matt, KW - Black/White-CK16 full matt
FRAME	C-Sport Lady alu disc, 700C Old 135mm, integrated cable routing, Smooth welding, 1.1/8" head tube (semi-integrated down HT tube and integrated in top HT tube). Seat tube 31.6mm, size: 43,47,51,55cm
SEATPOST CLAMP	MX-112C alloy, diam. 31,8mm
HEADSET	Fsa No.8B/ZS4D 1.1/8" Semi-Integrated lower part + Integrated upper part, w/cap 15mm
FORK	Bianchi Alu Disc, 1.1/8", Post mount, max tire size 700x40c
SHIFTER	Shimano ST-EF505 3x8sp
REAR DERAILLEUR	Shimano Acera RD-M360-L SGS 8sp, direct attachment
FRONT DERAILLEUR	Shimano Tourney FD-TY700-TS3, Top swing, dual pull, band type 34.9mm, 63-66°, for 42T, CL: 47.5/50mm
CRANKSET	Shimano FC-TY301 42x34x24T, crank length: 170mm-43/47cm, 175mm-51/55cm
BOTTOM BRACKET	Shimano BB-UN100, Asse:122.5mm(D-NL), Shell:BSA 68mm
CHAIN	Kmc Z-72 8sp
CASSETTE / FREEWHEEL	Shimano CS-HG200-8, 12-14-16-18-21-24-28-32T
BRAKE	Shimano BR-MT200, Resin pad
BRAKE LEVER	Included w/brakeset
DISC ROTOR	Shimano SM-RT10, 160mm, Center Lock , for resin pad only
FRONT HUB	Formula CL-1420 Center Lock, 32 hole, OLD. 100mm Axle 108mm with QR
REAR HUB	Formula CL-1422 Center lock, 32hole, OLD 135mm Axle 145mm, Shimano freewheel body, with QR
RIM/WHEELSET	Alex Rims ATD470 disc, alloy, 700c 622x17, 32h, pair spoke 2x16
TIRE	Kenda Eurotrek 700x35, 60TPI, Wire Bead, w/3mm Kshield antipuncture insert
STEM	3D forged AL6061, 12°, 31.8mm, 1.1/8", Ext: 70mm-43cm, 100mm-47/51cm, 120mm-55cm
HANDLEBAR	Alloy 6061 DB, flat bar, width: 620mm, 9° bend, 31.8mm
GRIP / TAPE	Bianchi Ergonomic Double density, Black/CK
SEATPOST	AL6061 shaft, alloy head, 15mm offset, diam. 31.6mm, length 350mm
SADDLE	Bianchi, steel rail, w/high density foam, Black/CK
PEDALS	included

C-SPORT CROSS 2 GENT - ACERA 24SP HYDR. BRAKE

CODE	YPBB2
COLOR	1Z - Black/CK16-Graphite full matt
FRAME	C-Sport Cross Gent Alu Disc, 700C OLD 135mm, integrated cable routing, Smooth welding, 1.1/8" semintegrated headset, seat tube diam. 31.6mm, size:43,47,51,55cm
SEATPOST CLAMP	339QX alloy clamp & lever, diam. 35mm
HEADSET	Fsa No.8B/ZS4D 1.1/8" Semi-Integrated lower part + Integrated upper part, w/cap 15mm
FORK	SR Suntour Nex Hlo DS, travel 63mm, 700c, 1.1/8" steel HT, steel stanchions, alloy blades, postmount disc, w/lockout
SHIFTER	Shimano ST-EF505 3x8sp
REAR DERAILLEUR	Shimano Acera RD-M360-L SGS 8sp, direct attachment
FRONT DERAILLEUR	Shimano Tourney FD-TY700-TS3, Top swing, dual pull, band type 34.9mm, 63-66°, for 42T, CL: 47.5/50mm
CRANKSET	Shimano FC-TY301 42x34x24T, crank length: 170mm-43/47cm, 175mm-51/55cm
BOTTOM BRACKET	Shimano BB-UN100, Asse:122.5mm(D-NL), Shell:BSA 68mm
CHAIN	Kmc Z-72 8sp
CASSETTE / FREEWHEEL	Shimano CS-HG200-8, 12-14-16-18-21-24-28-32T
BRAKE	Shimano BR-MT200, Resin pad
BRAKE LEVER	included w/brakeset
DISC ROTOR	Shimano SM-RT10, 160mm, Center Lock , for resin pad only
FRONT HUB	Formula CL-1420 Center Lock, 32 hole, OLD. 100mm Axle 108mm with QR
REAR HUB	Formula CL-1422 Center lock, 32hole, OLD 135mm Axle 145mm, Shimano freewheel body, with QR
RIM/WHEELSET	Alex Rims ATD470 disc, alloy, 700c 622x17, 32h, pair spoke 2x16
TIRE	Kenda Kwick 700x35, 30TPI, wire bead, w/Kshield antipuncture insert
STEM	3D forged AL6061, 12°, 31.8mm, 1.1/8", Ext: 70mm-43cm, 100mm-47/51cm, 120mm-55cm
HANDLEBAR	Alloy 6061 DB, flat bar, width: 620mm, 9° bend, 31.8mm
GRIP / TAPE	Bianchi Ergonomic Double density, Black/CK
SEATPOST	AL6061 shaft, alloy head, 15mm offset, diam. 31.6mm, length 350mm
SADDLE	Bianchi, steel rail, w/high density foam, Black/CK
PEDALS	included

C-SPORT CROSS 2 LADY - ACERA 24SP HYDR. BRAKE

CODE	YPBB3
COLOR	1Z - Black/CK16-Graphite full matt
FRAME	C-Sport Cross Lady Alu Disc, 700C, OLD 135mm, integrated cable routing, Smooth welding, 1.1/8" semintegrated headset. Seat tube diam. 31.6mm, size:43,47,51cm
SEATPOST CLAMP	339QX alloy clamp & lever, diam. 35mm
HEADSET	Fsa No.8B/ZS4D 1.1/8" Semi-Integrated lower part + Integrated upper part, w/cap 15mm
FORK	SR Suntour Nex Hlo DS, travel 63mm, 700c, 1.1/8" steel HT, steel stanchions, alloy blades, postmount disc, w/lockout
SHIFTER	Shimano ST-EF505 3x8sp
REAR DERAILLEUR	Shimano Acera RD-M360-L SGS 8sp, direct attachment
FRONT DERAILLEUR	Shimano Tourney FD-TY700-TS3, Top swing, dual pull, band type 34.9mm, 63-66°, for 42T, CL: 47.5/50mm
CRANKSET	Shimano FC-TY301 42x34x24T, crank length: 170mm-43/47cm, 175mm-51cm
BOTTOM BRACKET	Shimano BB-UN100, Asse:122.5mm(D-NL), Shell:BSA 68mm
CHAIN	Kmc Z-72 8sp
CASSETTE / FREEWHEEL	Shimano CS-HG200-8, 12-14-16-18-21-24-28-32T
BRAKE	Shimano BR-MT200, Resin pad
BRAKE LEVER	Included w/brakeset
DISC ROTOR	Shimano SM-RT10, 160mm, Center Lock , for resin pad only

FRONT HUB	Formula CL-1420 Center Lock, 32 hole, OLD. 100mm Axle 108mm with QR
REAR HUB	Formula CL-1422 Center lock, 32hole, OLD 135mm Axle 145mm, Shimano freewheel body, with QR
RIM/WHEELSET	Alex Rims ATD470 disc, alloy, 700c 622x17, 32h, pair spoke 2x16
TIRE	Kenda Kwick 700x35, 30TPI, wire bead, w/Kshield antipuncture insert
STEM	3D forged AL6061, 12°, 31.8mm, 1.1/8", Ext: 70mm-43cm, 100mm-47/51cm
HANDLEBAR	Alloy 6061 DB, flat bar, width: 620mm, 9° bend, 31.8mm
GRIP / TAPE	Bianchi Ergonomic Double density, Black/CK
SEATPOST	AL6061 shaft, alloy head, 15mm offset, diam. 31.6mm, length 350mm
SADDLE	Bianchi, steel rail, w/high density foam, Black/CK
PEDALS	included

SPILLO

SPILLO ONICE
SPILLO RUBINO
SPILLO TURCHESE

SPILLO

POSITIONING
Versatile and beautifully-engineered hybrid bikes.

COURSE/TERRAIN
Road.

END USE DESTINATION
Urban commuting.

KEY FEATURES
- Aluminum frame for men and women
- Timeless italian style and look
- Mudguards and rear carrier
- Kickstand

LIGHTWEIGHT ●●●●●○○○○○
DESIGN ●●●●●○○○○○
COMFORT ●●●●●●●○○○
PERFORMANCE ●●●●●●○○○○

GEOMETRY - SPILLO ONICE - RUBINO - TURCHESE **GENT**

SIZE					
A1	B1	BS	D	E	G
470	475	550	70	130	73°
510	590	566	70	150	73°
550	605	583	70	170	73°

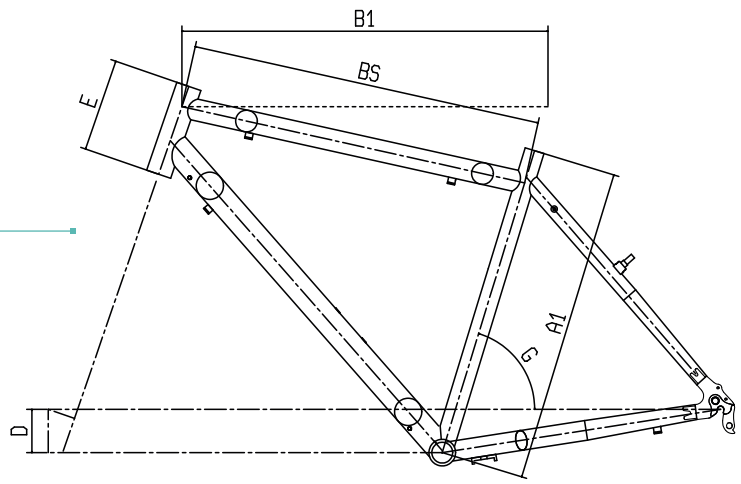

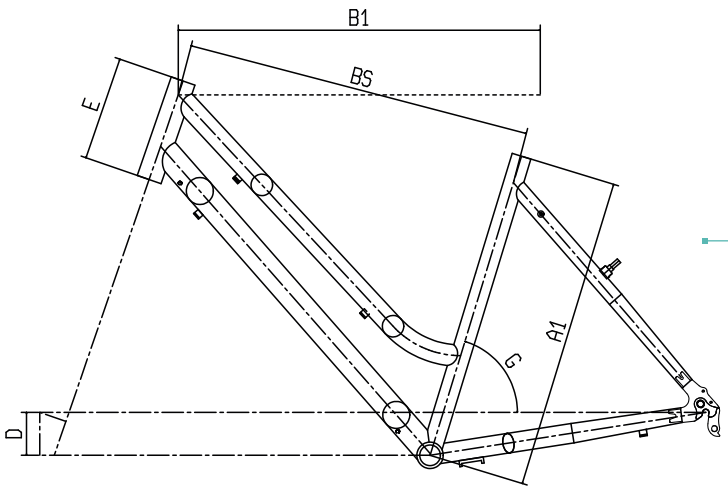

GEOMETRY - SPILLO ONICE - RUBINO - TURCHESE **LADY**

SIZE					
A1	B1	BS	D	E	G
430	565	540	70	150	73°
470	575	549	70	150	73°
510	590	565	70	170	73°

SPILLO ONICE GENT - ALTUS 24SP

THE IMAGE SHOWN IS INDICATIVE ONLY. Components and graphic details may differ from the actual model.

CODE	YEBA1
COLOR	EL- Black glossy
FRAME	Spillo Alloy 6061, 1.1/8" HT, OLD 135mm, sizes: 47-51-55cm
SEATPOST CLAMP	Alloy, diam 31.8mm w/quick release
HEADSET	1.1/8" Threaded, Steel
FORK	SR Suntour SF14-NEX P-700 C, 1.1/8", travel 63mm
SHIFTER	Shimano ST-EF500 3x8sp
REAR DERAILLEUR	Shimano Altus RD-M310-L 8sp, direct attachment
FRONT DERAILLEUR	Shimano Tourney FD-TY710-TS3, top-swing w/31.8mm adapter, 63-66° for 48T, CL:47.5/50mm
CRANKSET	Shimano TY301 48x38x28T, crank length 170mm
BOTTOM BRACKET	Bsa 68mm L:127mm
CHAIN	Kmc Z72 8sp
CASSETTE / FREEWHEEL	Shimano CS-HG200 8sp, 12-14-16-18-21-24-28-32T
BRAKE	V-Brake aluminium body
BRAKE LEVER	included w/shifters
FRONT HUB	Alloy, 36 h, 9x100x108mm w/Qr
REAR HUB	Shimano FH-TX5008-QR, 36h, 135x146mm, w/QR
RIM/WHEELSET	Freeway, Alloy double wall, 622X19, 36 holes
TIRE	CST 700X35
STEM	Alloy, adjustable diam. 25.4mm, ext:90mm, quill length: 180mm
HANDLEBAR	Alloy, width 590mm, rise 26mm,diam. 25.4mm, 33° backsweep
GRIP / TAPE	Herrmans 120mm

SEATPOST	Alloy w/suspension, diam 27.2mm, length 350mm
SADDLE	Selle Royal Wave, steel rails
PEDALS	Included
FRONT LIGHT	Spanninga Illico w/battery
REAR LIGHT	Basta Spark Red w/batteries
REAR CARRIER	Steel
KICKSTAND	Alloy, adjustable
MUDGUARD	Rapido 46mm w/rear mudflap, w/zinc coated bridges

COLORS AVAILABLE FROM DECEMBER 2019

SPILLO ONICE LADY - ALTUS 24SP

THE IMAGE SHOWN IS INDICATIVE ONLY. Components and graphic details may differ from the actual model.

CODE	YEBA0
COLOR	EL- Black Glossy
FRAME	Spillo Alloy 6061 Lady, 1.1/8" HT, OLD 135mm, sizes 43-47-51cm
SEATPOST CLAMP	Alloy, diam 31.8mm w/quick release
HEADSET	1.1/8" Threaded, Steel
FORK	SR Suntour SF14-NEX P-700 C, 1.1/8", travel 63mm
SHIFTER	Shimano ST-EF500 3x8sp
REAR DERAILLEUR	Shimano Altus RD-M310-L 8sp, direct attachment
FRONT DERAILLEUR	Shimano Tourney FD-TY710-TS3, top-swing w/31.8mm adapter, 63-66° for 48T, CL:47.5/50mm
CRANKSET	Shimano TY301 48x38x28T, crank length 170mm
BOTTOM BRACKET	Bsa 68mm L:127mm
CHAIN	Kmc Z72 8sp
CASSETTE / FREEWHEEL	Shimano CS-HG200 8sp, 12-14-16-18-21-24-28-32T
BRAKE	V-Brake aluminium body
BRAKE LEVER	included w/shifters
FRONT HUB	Alloy, 36 h, 9x100x108mm w/Qr
REAR HUB	Shimano FH-TX5008-QR, 36h, 135x146mm, w/QR
RIM/WHEELSET	Freeway, Alloy double wall, 622X19, 36 holes
TIRE	CST 700X35
STEM	Alloy, adjustable diam. 25.4mm, ext:90mm, quill length: 180mm
HANDLEBAR	Alloy, width 590mm, rise 26mm,diam. 25.4mm, 33° backsweep

GRIP / TAPE	Herrmans 120mm
SEATPOST	Alloy w/suspension, diam 27.2mm, length 350mm
SADDLE	Selle Royal Wave, steel rails
PEDALS	Included
FRONT LIGHT	Spanninga Illico w/battery
REAR LIGHT	Basta Spark Red w/batteries
REAR CARRIER	Steel
KICKSTAND	Alloy, adjustable
MUDGUARD	Rapido 46mm w/rear mudflap, w/zinc coated bridges

COLORS AVAILABLE FROM DECEMBER 2019

SPILLO RUBINO DELUXE GENT - 21SP

CODE	YEB5L
COLOR	LK- Celeste vintage, KO- Black/Red glossy
FRAME	Spillo Alloy 6061, 1.1/8" HT, OLD 135mm, sizes: 47-51-55cm
SEATPOST CLAMP	Alloy, diam. 31.8mm w/QR
HEADSET	1.1/8", Steel
FORK	Bianchi Steel 1.1/8"
SHIFTER	Shimano ST-EF500 3x7sp
REAR DERAILLEUR	Shimano Tourney RD-TY500 7sp, direct attachement
FRONT DERAILLEUR	Shimano Tourney FD-TY510-TS3, top-swing w/31.8mm adapter, 63-66° for 48T, CL:47.5/50mm
CRANKSET	Crankset w/48x38x28T chainrings, crank length: 170mm
BOTTOM BRACKET	Bsa 68mm, axle length 127mm
CHAIN	Kmc Z51 7sp
CASSETTE / FREEWHEEL	Shimano TZ500 7sp 14-28T
BRAKE	V-Brake, alloy
BRAKE LEVER	included w/shifters
FRONT HUB	Alloy, 36 h, 9x100x108mm w/Qr
REAR HUB	Alloy, 36 h, 130x145mm, w/QR
RIM/WHEELSET	Freeway, Alloy double wall, 622X19, 36 holes
TIRE	CST Xpedium 700x35, 37-622, 26TPI
STEM	Alloy, adjustable diam. 25.4mm, ext: 90mm, quill length:180mm
HANDLEBAR	Alloy, width 590mm, rise 26mm, diam. 25.4mm, 33° backsweep

GRIP / TAPE	Herrmans 120mm
SEATPOST	Aluminium, diam 27.2mm, length 350mm
SADDLE	Selle Royal Rio, steel rails
PEDALS	Included
FRONT LIGHT	Spanninga Illico w/battery
REAR LIGHT	Basta Spark Red w/batteries
REAR CARRIER	Steel
KICKSTAND	Alloy, adjustable
MUDGUARD	Rapido 46mm, w/rear mudflap, w/zinc coated bridges

LK- Celeste vintage

COLORS AVAILABLE FROM DECEMBER 2019

SPILLO RUBINO DELUXE LADY - 21SP

CODE	YEB5M
COLOR	LK- Celeste vintage, KO- Black/Red glossy
FRAME	Spillo Alloy 6061 Lady, 1.1/8" HT, OLD 135mm, sizes 43-47-51cm
SEATPOST CLAMP	Alloy, diam. 31.8mm w/QR
HEADSET	1.1/8", Steel
FORK	Bianchi Steel, 1.1/8" w/light support
SHIFTER	Shimano ST-EF500 3x7sp
REAR DERAILLEUR	Shimano Tourney RD-TY500 7sp, direct attachement
FRONT DERAILLEUR	Shimano Tourney FD-TY510-TS3, top-swing w/31.8mm adapter, 63-66° for 48T, CL:47.5/50mm
CRANKSET	Crankset w/48x38x28T chainrings, crank length: 170mm
BOTTOM BRACKET	Bsa 68mm, axle length 127mm
CHAIN	Kmc Z51 7sp
CASSETTE / FREEWHEEL	Shimano TZ500 7sp 14-28T
BRAKE	V-Brake, alloy
BRAKE LEVER	included w/shifters
FRONT HUB	Alloy, 36 h, 9x100x108mm w/Qr
REAR HUB	Alloy, 36 h, 130x145mm, w/QR
RIM/WHEELSET	Freeway, Alloy double wall, 622X19, 36 holes
TIRE	CST Xpedium 700x35, 37-622, 26TPI
STEM	Alloy, adjustable diam. 25.4mm, ext: 90mm, quill length:180mm

HANDLEBAR	Alloy, width 590mm, rise 26mm, diam. 25.4mm, 33° backsweep
GRIP / TAPE	Herrmans 120mm
SEATPOST	Aluminium, diam 27.2mm, length 350mm
SADDLE	Selle Royal Rio, steel rails
PEDALS	Included
FRONT LIGHT	Spanninga Illico w/battery
REAR LIGHT	Basta Spark Red w/batteries
REAR CARRIER	Steel
KICKSTAND	Alloy, adjustable
MUDGUARD	Rapido 46mm, w/rear mudflap, w/zinc coated bridges

COLORS AVAILABLE FROM DECEMBER 2019

SPILLO RUBINO GENT - 21SP

CODE	YEBA8
COLOR	EK- CK16 Glossy, EO- Silver Glossy
FRAME	Spillo Alloy 6061, 1.1/8" HT, OLD 135mm, sizes: 47-51-55cm
SEATPOST CLAMP	Alloy, diam 31.8mm w/quick release
HEADSET	1.1/8" Threaded, Steel
FORK	Bianchi Steel 1.1/8"
SHIFTER	Shimano ST-EF500 3x7sp
REAR DERAILLEUR	Shimano Tourney RD-TY500 7sp, direct attachement
FRONT DERAILLEUR	Shimano Tourney FD-TY510-TS3, top-swing w/31.8mm adapter, 63-66° for 48T, CL:47.5/50mm
CRANKSET	Crankset w/48x38x28T chainrings, crank length: 170mm
BOTTOM BRACKET	Bsa 68mm, axle length 127mm
CHAIN	Kmc Z51 7sp
CASSETTE / FREEWHEEL	Shimano TZ500 7sp 14-28T
BRAKE	V-Brake, alloy
BRAKE LEVER	included w/shifters
FRONT HUB	Alloy, 36 h, 9x100x108mm w/Qr
REAR HUB	Alloy, 36 h, 130x145mm, w/QR
RIM/WHEELSET	Freeway, Alloy double wall, 622X19, 36 holes
TIRE	CST 700X35
STEM	Alloy, adjustable diam. 25.4mm, ext:90mm, quill length: 180mm
HANDLEBAR	Alloy, width 590mm, rise 26mm,diam. 25.4mm, 33° backsweep

GRIP / TAPE	Herrmans 120mm
SEATPOST	Alloy, diam. 27.2mm, length 350mm
SADDLE	Selle Royal Wave, steel rails
PEDALS	Included
FRONT LIGHT	Spanninga Illico w/battery
REAR LIGHT	Basta Spark Red w/batteries
REAR CARRIER	Steel
KICKSTAND	Alloy, adjustable
MUDGUARD	Rapido 46mm w/rear mudflap, w/zinc coated bridges

COLORS AVAILABLE FROM DECEMBER 2019

SPILLO RUBINO LADY - 21SP

CODE	YEBA9
COLOR	EK- CK16 Glossy, EO- Silver Glossy
FRAME	Spillo Alloy 6061 Lady, 1.1/8" HT, OLD 135mm, sizes 43-47-51cm
SEATPOST CLAMP	Alloy, diam 31.8mm w/quick release
HEADSET	1.1/8" Threaded, Steel
FORK	Bianchi Steel, 1.1/8" w/light support
SHIFTER	Shimano ST-EF500 3x7sp
REAR DERAILLEUR	Shimano Tourney RD-TY500 7sp, direct attachement
FRONT DERAILLEUR	Shimano Tourney FD-TY510-TS3, top-swing w/31.8mm adapter, 63-66° for 48T, CL:47.5/50mm
CRANKSET	Crankset w/48x38x28T chainrings, crank length: 170mm
BOTTOM BRACKET	Bsa 68mm, axle length 127mm
CHAIN	Kmc Z51 7sp
CASSETTE / FREEWHEEL	Shimano TZ500 7sp 14-28T
BRAKE	V-Brake, alloy
BRAKE LEVER	included w/shifters
FRONT HUB	Alloy, 36 h, 9x100x108mm w/Qr
REAR HUB	Alloy, 36 h, 130x145mm, w/QR
RIM/WHEELSET	Freeway, Alloy double wall, 622X19, 36 holes
TIRE	CST 700X35
STEM	Alloy, adjustable diam. 25.4mm, ext:90mm, quill length: 180mm

HANDLEBAR	Alloy, width 590mm, rise 26mm,diam. 25.4mm, 33° backsweep
GRIP / TAPE	Herrmans 120mm
SEATPOST	Alloy, diam. 27.2mm, length 350mm
SADDLE	Selle Royal Wave, steel rails
PEDALS	Included
FRONT LIGHT	Spanninga Illico w/battery
REAR LIGHT	Basta Spark Red w/batteries
FRONT CARRIER	Steel
REAR CARRIER	Steel
KICKSTAND	Alloy, adjustable
MUDGUARD	Rapido 46mm w/rear mudflap, w/zinc coated bridges

COLORS AVAILABLE FROM DECEMBER 2019

SPILLO TURCHESE DS GENT - 6SP

CODE	YEB5E
COLOR	EL - Black glossy
FRAME	Spillo Alloy 6061, 1.1/8" HT, OLD 130mm, size 51cm
SEATPOST CLAMP	Alloy, diam 31.8mm w/quick release
HEADSET	1.1/8" Threaded, Steel
FORK	Bianchi Steel, 1.1/8"
SHIFTER	Shimano SL-RS36 Revo Shifter 6sp
REAR DERAILLEUR	Shimano Tourney RDTY21 6sp, direct attachement
CRANKSET	Crankset w/42T chainring, crank length: 170mm
BOTTOM BRACKET	Bsa standard, 124mm axle
CHAIN	YBN S50 6sp
BRAKE	V-Brake, alloy
BRAKE LEVER	V-Brake lever 4 finger
FRONT HUB	Steel, 36h, 9x100x108mm w/QR
REAR HUB	Steel, 36 h, 130x140mm w/Qr
RIM/WHEELSET	Freeway, Alloy double wall, 622X19, 36 holes
TIRE	CST 700X35
STEM	Alloy, Diam. 25.4mm, Ext: 80mm, Rise 25mm, Quill length: 180mm
HANDLEBAR	Steel, width 595mm, diam. 25.4mm
GRIP / TAPE	Kraton, L.90/120mm, diam 22mm
SEATPOST	Steel, diam 27.2mm, length 300mm
SADDLE	Selle Royal 6007HR, steel rails
PEDALS	Included

FRONT LIGHT	Spanninga Illico w/battery
REAR LIGHT	Basta Spark Red w/batteries
REAR CARRIER	Steel
KICKSTAND	Alloy, adjustable
MUDGUARD	Rapido 46mm, black plastic w/zinc coated bridges
MUDGUARD	Rapido 46mm, black plastic w/zinc coated bridge w/mud protection spoiler

COLORS AVAILABLE FROM DECEMBER 2019

SPILLO TURCHESE DS LADY - 6SP

CODE	YEB5F
COLOR	EL - Black glossy
FRAME	Spillo Alloy 6061 Lady, 1.1/8" HT, OLD 130mm, size 43cm
SEATPOST CLAMP	Alloy, diam 31.8mm w/quick release
HEADSET	1.1/8" Threaded, Steel
FORK	Bianchi Steel, 1.1/8"
SHIFTER	Shimano SL-RS36 Revo Shifter 6sp
REAR DERAILLEUR	Shimano Tourney RDTY21 6sp, direct attachement
CRANKSET	Crankset w/42T chainring, crank length: 170mm
CHAIN	YBN S50 6sp
BRAKE	V-Brake, alloy
BRAKE LEVER	V-Brake lever 4 finger
FRONT HUB	Steel, 36h, 9x100x108mm w/QR
REAR HUB	Steel, 36 h, 130x140mm w/Qr
RIM/WHEELSET	Freeway, Alloy double wall, 622X19, 36 holes
TIRE	CST 700X35
STEM	Alloy, Diam. 25.4mm, Ext: 80mm, Rise 25mm, Quill length: 180mm
HANDLEBAR	Steel, width 595mm, diam. 25.4mm
GRIP / TAPE	Kraton, L.90/120mm, diam 22mm
SEATPOST	Steel, diam 27.2mm, length 300mm
SADDLE	Selle Royal 6007HR, steel rails
PEDALS	Included
FRONT LIGHT	Spanninga Illico w/battery

REAR LIGHT	Basta Spark Red w/batteries
REAR CARRIER	Steel
KICKSTAND	Alloy, adjustable
MUDGUARD	Rapido 46mm, black plastic w/zinc coated bridges
KICKSTAND	Alloy Adjustable 20-28"
MUDGUARD	Rapido 46mm, black plastic w/zinc coated bridge w/mud protection spoiler

COLORS AVAILABLE FROM DECEMBER 2019

JUNIOR 24" - CLARIS 2X8SP

CODE	YEB42
COLOR	CK - Celeste
FRAME	Bianchi Corsa Junior 24", size: 41cm
SEATPOST CLAMP	Diam. 31,8mm with Bianchi logo
HEADSET	Miche Team Threadless 1"
FORK	Bianchi Corsa Junior steel 1"
SHIFTER	Shimano Claris ST-R2400 2x8sp
REAR DERAILLEUR	Shimano Claris RD-R2400 GS 8sp, direct attachment, max sprocket 34T
FRONT DERAILLEUR	Shimano Claris FD-2400, band type diam.34.9mm w/31.8mm adapter
CRANKSET	Miche Young, alloy, 45/35T, crank length: 145mm
BOTTOM BRACKET	FSA BB-7420AL Bsa 60mm square type 110.5mm
CHAIN	Kmc HV800-110 1/2"x3/32"
CASSETTE / FREEWHEEL	Miche Profile Shimano compatible 8sp, 16/24T
BRAKE	RC-452 F/R Al forged with cartridge pad
BRAKE LEVER	included w/shifters
FRONT HUB	Alloy A141SB 28h, two sealed bearing, with QR
REAR HUB	Alloy F192SB, OLD 130mm, axle: 10x140mm, 28h, two sealed bearing, steel freewheel body, w/QR
RIM/WHEELSET	Ambrosio Balance, Aluminium 6005, clincher 24", 28h, height 22mm
TIRE	Kenda Koncept 24" 25-520
STEM	Alloy, 1.1/8", ext:50mm, w/Bianchi logo

HANDLEBAR	Dedaelementi Junior Piega alloy 6061, drop 120, diam.26mm, size: 38cm
GRIP / TAPE	La Spirale Ribbon cork w/plug carbon look w/Bianchi logo
SEATPOST	Alloy, diam. 27.2mm, L. 250mm
SADDLE	Bianchi, steel rail, 255x130mm
BOTTLE CAGE	Alloy black
WATER BOTTLE	Celeste c/ Bianchi logo

[EU]

MEMBER OF

CYCLEUROPE

F.I.V.E BIANCHI S.P.A

VIA DELLE BATTAGLIE, 5
IT 24047 TREVIGLIO / BG

T +39 0363 3161
F +39.0363.075045

bianchi@bianchi.com

#RIDEBIANCHI

BIANCHI SPONSORED EVENTS

Eroica®

Bianchi Granfondo Internazionale
FELICE GIMONDI

GARA INTERNAZIONALE DI MOUNTAIN BIKE
GIMONDIBIKE
GRUPPO NULLI

Bianchi reserves the right to make changes without prior warning.
For further information please go to bianchi.com