Bianchi

TECHNICAL BOOK

ROAD P. 03
GRAVEL P. 65
E-BIKES P. 80
MTB P. 141
CITY-FITNESS P. 149

rev. 20/06/2024



ROAD

RACING | ENDURANCE | CYCLOCROSS

ROAD RACING AERO

OLTRE RC

OLTRE PRO

OLTRE COMP

OLTRE RACE


OLTRE
RC

THE IDEA

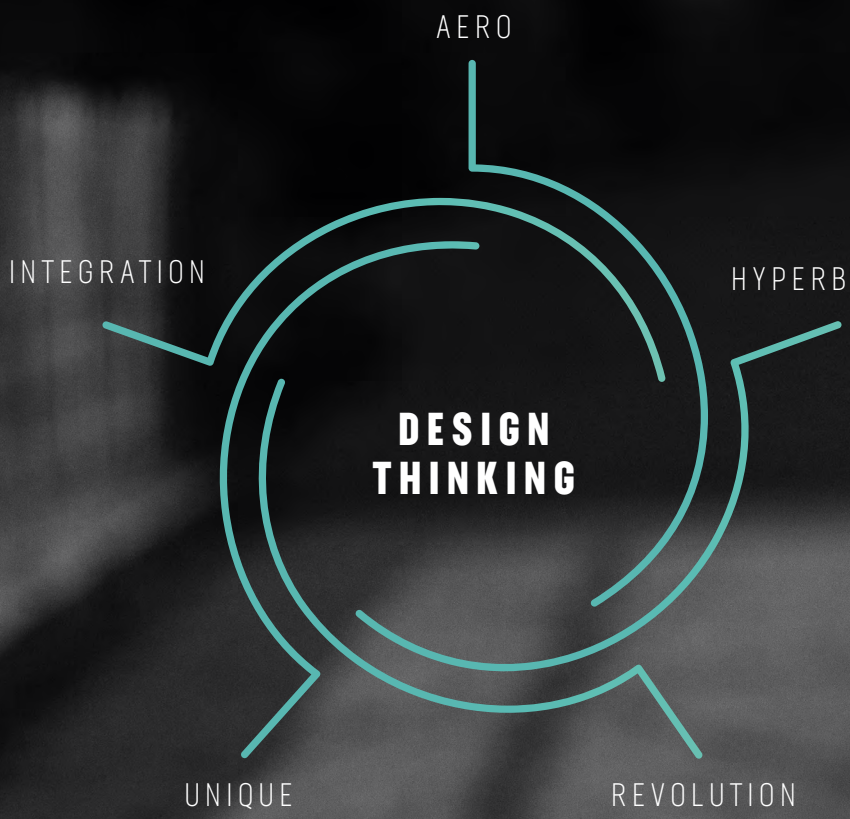

INTEGRATED SYSTEM

ATHLETE / BICYCLE

+

FRAME / COMPONENTS

↓

MAXIMUM PERFORMANCE
OPTIMIZATION



NUMBERS THAT SPEAK

SAVING

-17.1 WATTS

AT 50KM/H

COMPARED TO
OLTRE XR4 AT 50 KM/H

-5.1% CDA*

CDA*: coefficient of aerodynamic drag, which is the result of bike/ athlete's drag, shape and surface.



AIR DEFLECTOR

IMPROVE THE DIRECTION OF AIR FLOW.
OPTIMIZE THE AERODYNAMICS OF THE BIKE
AND ATHLETE.

PATENT PENDING.

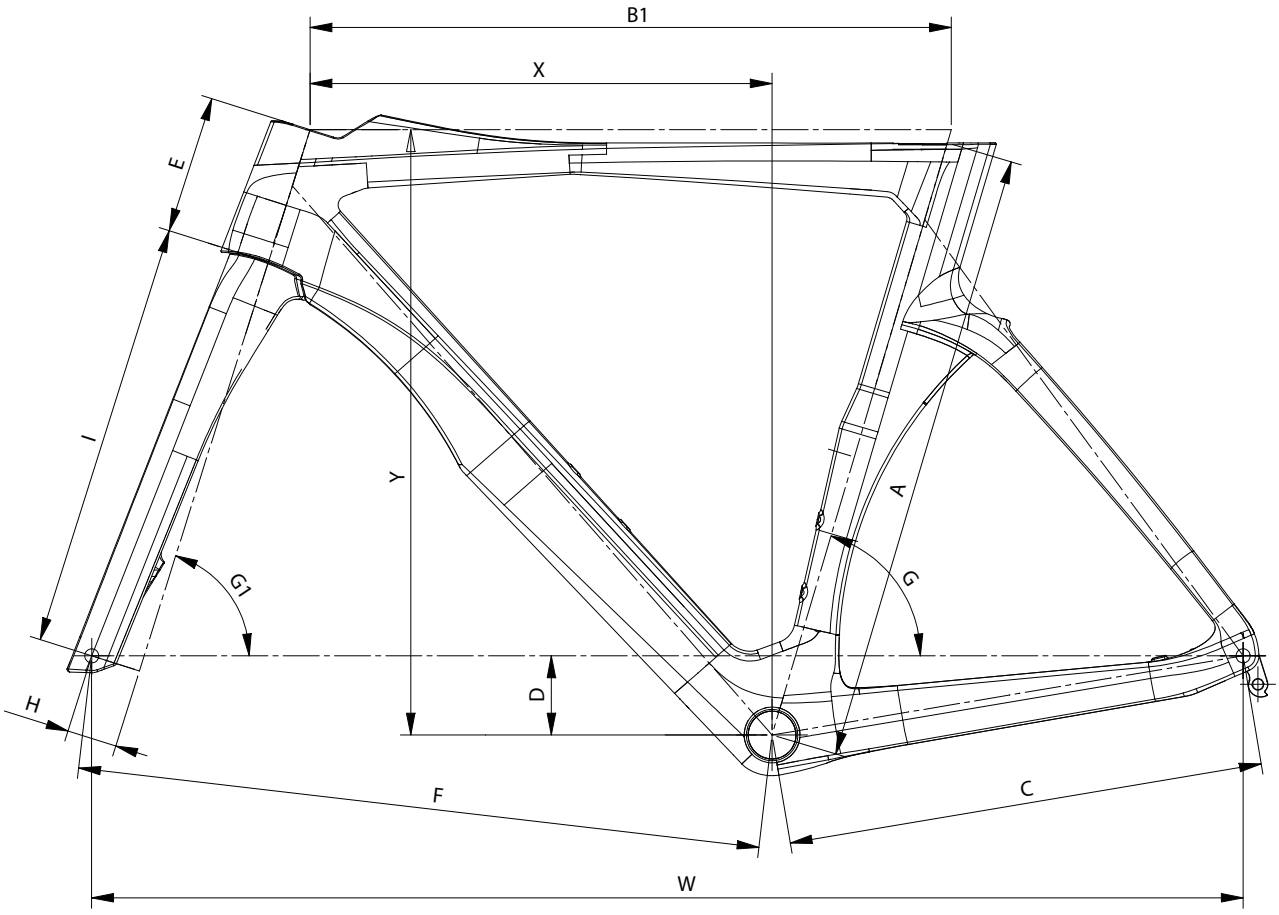

Oltre RC / Oltre PRO / Oltre COMP													
SIZE	A	B1	C	D	E	F	G	G1	H	I	X	Y	WB
470	450	515	410	58	83	579	74.5°	70.5°	43	368	385	470	982
500	480	525	410	58	88	581	74.5°	71.5°	43	368	392	478	983
530	510	536	410	68	103	582	74°	72°	43	368	393	504	984
550	530	550	410	68	118	588	73.5°	72.5°	43	368	397	520	988
570	550	560	412	68	133	593	73.5°	73°	43	368	402	536	996
590	570	575	412	68	153	603	73°	73°	43	368	406	555	1005

OLTRE RC TEAM REPLICA | DURACE DI2 12SP | YTB03



The image shown is indicative only. Components and graphic detail may differ from actual model. Bianchi reserves the right to amend specifications and/or prices.

COLOR	1Y - Carbon/CK16
FRAME	Oltre RC carbon aero shape, electronic drivetrain only, headset 1.1/4"-1.1/4",BB-PressFit 86,5x41mm, integrated seat clamp, for flat mount caliper, internal cable routing for disc brakes, thru axle 12x142mm sizes 47-50-53-55-57-59cm
SEATPOST CLAMP	included in the frame
HEADSET	FSA MR137, MR082R
FORK	Full Carbon aero, Disc brakes, integrated head 1.1/4", flat mount caliper, thru axle 12x100mm
SHIFTER	Shimano Durace Di2 hydraulic disc brake for road ST-R9270(L), BR-R9270(F) ST-R9270(R), BR-R9270(R)
REAR DERAILLEUR	Shimano Durace Di2 12sp RD-R9250, DURA-ACE Di2 12-speed
FRONT DERAILLEUR	Shimano Durace Di2 12sp FD-R9250, DURA-ACE Di2, brazed-on type
CRANKSET	Shimano Durace 12sp FC-R9200-P, DURA-ACE power meter, hollowtech 2, for rear 12- speed, 170-172mm, 52x36T Crank Length: 170mm-47~53cm, 172.5mm-55~59cm
BOTTOM BRACKET	Shimano SM-BB92-41B , press fit type for road
CHAIN	Shimano Durace 12 sp CN-M9100, 112link for HG 12 - speed, w/quick link
CASSETTE / FREEWHEEL	Shimano Durace 12sp 11-30T CS-R9200 DURA-ACE 12sp, 11-12-13-14-15-16-17-19-21-24-27-30T

BRAKE	Shimano BR-R9270 Hydraulic disc brake included in the shifter
BRAKE LEVER	included
DISC ROTOR	Shimano RT-CL900 center lock type w/Ice Tech, 160mm front and rear
RIM/WHEELSET	VISION WH Set METRON60 SL disc brake center lock, tubless ready
TIRE	Vittoria Corsa Pro 28-622 TLR G2.0 320TPI
STEM	Reparto Corse Integrated handlebar Integrated Aero bar, material Carbon, drop 125mm, reach 80mm Ext: 90x400-47/50cm ; 100x420-53cm ; 110x420-55/57cm; 120x440-59cm
HANDLEBAR	included in the stem
GRIP / TAPE	Ribbon cork celeste
SEATPOST	Oltre Full Carbon Aero special dimension seatpost, 20mm offset, length: 280mm-47cm, 300mm-50~55cm, 350mm-57~59cm
SADDLE	SelleItalia SLR BOOST PRO TEAM kit carbonio superlow, S3, 130x248mm

OLTRE RC | SRAM RED ETAP AXS 12SP | YUB20



The image shown is indicative only. Components and graphic detail may differ from actual model. Bianchi reserves the right to amend specifications and/or prices.

COLOR	ZE - Metallic Celeste/CK16 - full glossy ZW - Carbon UD/Metallic Celeste - full matt
FRAME	Oltre RC carbon aero shape, electronic drivetrain only, headset 1.1/4-1.1/4,BB-PressFit 86,5x41mm, integrated seat clamp, for flat mount caliper, internal cable routing for disc brakes, thru axle 12x142mm sizes 47-50-53-55-57-59cm
SEATPOST CLAMP	included in the frame
HEADSET	Fsa No. 54 - MR137 - ACB 1-1/4diam.46.9x diam.37x7
FORK	Full Carbon aero, Disc brakes, integrated head 1.1/4, flat mount caliper, thru axle 12x100mm
SHIFTER	Sram Red eTap AXS E1 Hydraulic Disc Brake
REAR DERAILLEUR	Sram Red eTap AXS E1 12sp
FRONT DERAILLEUR	Sram Red eTap AXS E1
CRANKSET	Sram Red E1, 12sp, Quark power meter, 48/35, ~~Crank Length: 170mm-47/53cm, 172.5mm-55/59cm~~
BOTTOM BRACKET	Sram Press fit Road 86,5x41
CHAIN	Sram Red E1, 114 links
CASSETTE / FREEWHEEL	Sram Red XG 1290, E1, 10-33, 10-11-12-13-14-15-17-19-21-24-28-33T
BRAKE	Sram included in the shifter
DISC ROTOR	Sram Paceline X, centerlock, 160mm front and rear

RIM/WHEELSET	Reparto Corse Carbon SPB 50mm profile, 700x21c (front), Reparto Corse Carbon SPB 65mm profile, 700x21c, XDR body (rear), 3K and UD high strength carbon fiber, tubeless ready, weight per set: 1520 gr (+/-5%)
TIRE	Pirelli P ZERO™ Race SL TLR , 28-622, 120 tpi
STEM	Integrated handlebar Integrated Aero bar, material Carbon, drop 125mm, reach 80mm, Di2 compatible Ext: 90x400-47/50cm ; 100x420-53cm ; 110x420-55/57cm; 120x440-59cm
HANDLEBAR	included in the stem
GRIP / TAPE	Bianchi Arrow premium tape, 2.5mm thickness, black
SEATPOST	Oltre Full Carbon Aero special dimension seatpost, 20mm offset, length: 280mm-47cm, 300mm-50/55cm, 350mm-57/59cm
SADDLE	Bianchi RC139 Carbon Air, weight 168g, Lenght: 250mm, Wide: 139mm, Rails: 7x9,3mm

OLTRE RC | DURACE DI2 12SP | YUB21



The image shown is indicative only. Components and graphic detail may differ from actual model. Bianchi reserves the right to amend specifications and/or prices.

COLOR	ZE - Metallic Celeste/CK16 - full glossy ZW - Carbon UD/Metallic Celeste - full matt
FRAME	Oltre RC carbon aero shape, electronic drivetrain only, headset 1.1/4-1.1/4,BB-PressFit 86,5x41mm, integrated seat clamp, for flat mount caliper, internal cable routing for disc brakes, thru axle 12x142mm sizes 47-50-53-55-57-59cm
SEATPOST CLAMP	included in the frame
HEADSET	Fsa No. 54 - MR137 - ACB 1-1/4diam.46.9x diam.37x7 Fsa TH970R - MR082R - SL Alloy ACB 1-1/4diam.46.8x diam.34x7
FORK	Full Carbon aero, Disc brakes, integrated head 1.1/4, flat mount caliper, thru axle 12x100mm
SHIFTER	Shimano Durace Di2 hydraulic disc brake for road, ST-R9270, BR-R9270, for 160mm rotor
REAR DERAILLEUR	Shimano Durace Di2 12sp, RD-R9250
FRONT DERAILLEUR	Shimano Durace Di2 12sp,FD-R9250
CRANKSET	Shimano, Durace 12sp, FC-R9200, 4iiii precision 3+ dual side power meter, 52x36T, Crank Length: 170mm-47/54cm, 172.5mm-55/59cm
BOTTOM BRACKET	Shimano, SM-BB92-41B, press fit for road
CHAIN	Shimano Durace 12sp, CN-M9100
CASSETTE / FREEWHEEL	Shimano Durace 12sp, CS-R9200, 11-12-13-14-15-16-17-19-21-24-27-30T

BRAKE	Shimano BR-R9270 Hydraulic disc brake, included in the shifter
BRAKE LEVER	included
DISC ROTOR	Shimano CL900, centerlock type w/Ice Tech, 160mm front and rear
RIM/WHEELSET	Reparto Corse Carbon SPB 50mm profile, 700x21c (front), Reparto Corse Carbon SPB 65mm profile, 700x21c, HG11 body (rear), 3K and UD high strength carbon fiber, tubeless ready, weight per set: 1520 gr (+/-5%)
TIRE	Pirelli P ZERO™ Race SL TLR , 28-622, 120 tpi
STEM	Integrated handlebar Integrated Aero bar, material Carbon, drop 125mm, reach 80mm, Di2 compatible Ext: 90x400-47/50cm ; 100x420-53cm; 110x420-55/57cm; 120x440-59cm
HANDLEBAR	included in the stem
GRIP / TAPE	Bianchi Arrow premium tape, 2.5mm thickness, black
SEATPOST	Oltre Full Carbon Aero special dimension seatpost, 20mm offset, length: 280mm-47cm, 300mm-50/55cm, 350mm-57/59cm
SADDLE	Bianchi RC139 Carbon Air, weight 168g, Lenght: 250mm, Wide: 139mm, Rails: 7x9,3mm

OLTRE RC | REPARTO CORSE 50R SPB TECH



The image shown is indicative only. Components and graphic detail may differ from actual model. Bianchi reserves the right to amend specifications and/or prices.

SPOKES	N 24 , straight pull, flat, stainless steel Nipples: Alloy with secure lock
HUB	• Hub bodies: Aluminium alloy 7075 • Hub width: 100mm • Axle type: 12 mm Aluminium thru axle • Bearings SKF angular contact • Brake interface: Center Lock
RIM	ASTM classification: 1 • Material: 3K and UD high strength carbon fiber • Finish: black shiny with fading effect • Tyre compatibility: tubeless ready and clincher • Recommended tyre size: 700c, from 25 mm • Front rim height: 50 mm (external width 29,2 mm) • Internal width: 21 mm • Decals: Water transfer under flatting
TYRES	• Tubeless ready • Clincher
WEIGHT	685g

OLTRE RC | REPARTO CORSE 65R SPB TECH



The image shown is indicative only. Components and graphic detail may differ from actual model. Bianchi reserves the right to amend specifications and/or prices.

SPOKES	N 24 , straight pull, flat, stainless steel Nipples: Alloy with secure lock
VERSIONS	HG FW body XDR FW body N3W FW body
COMPATIBILITY	• Shimano sprocket set 10/11/12 • SRAM sprocket set 10/11/12 • Campagnolo sprocket set 11/12/13
HUB	• Hub bodies: Aluminium alloy 7075 • Ratchet system 3 pawls + 1 spring (33 teeth) • Hub width: 142 mm • Axle type: 12 mm Aluminium thru axle • Bearings SKF angular contact • Brake interface: Center Lock
RIM	ASTM classification: 1 • Material: 3K and UD high strength carbon fiber • Finish: black shiny with fading effect • Tyre compatibility: tubeless ready and clincher • Recommended tyre size: 700c, from 25 mm • Rear rim height: 65 mm (external width 31 mm) • Internal width: 21 mm • Decals: Water transfer under flatting
TYRES	• Tubeless ready • Clincher
WEIGHT	835g

OLTRE RC | REPARTO CORSE 139RC CARBON AIR



The image shown is indicative only. Components and graphic detail may differ from actual model. Bianchi reserves the right to amend specifications and/or prices.

DATA SHEET	• Lenght: 250 mm • Wide: 139 mm • Weight: 130 g* • Height to 72 mm (C.o.b.): 41 mm • Rails: 7 x 9,3 mm
TECHNOLOGY	• Cover: tessuto microfibra • Padding: gravitech • Inserts: PWR gel • Shell: carbon fiber • Rails: carbon

OLTRE RC | FRAMESET | XTB05



The image shown is indicative only. Components and graphic detail may differ from actual model. Bianchi reserves the right to amend specifications and/or prices.

COLOR	ZE - Metallic Celeste/CK16 - full glossy ZW - Carbon UD/Metallic Celeste - full matt
FRAME	Oltre RC carbon aero shape, electronic drivetrain only, headset 1.1/4-1.1/4,BB-PressFit 86,5x41mm, integrated seat clamp, for flat mount caliper, internal cable routing for brakes, thru axle 12x142mm, compatible with 700x30 tire sizes 47-50-53-55-57-59cm
SEATPOST CLAMP	included in the frame
HEADSET	Fsa No. 54 - MR137 - ACB 1-1/4 diam.46.9 x diam.37x7 Fsa TH970R - MR082R - SL Alloy ACB 1-1/4 diam.46.8 x diam.34x7
FORK	Full Carbon aero, brakes, integrated head 1.1/4, flat mount caliper, thru axle 12x100mm, compatible with 700x30 tire

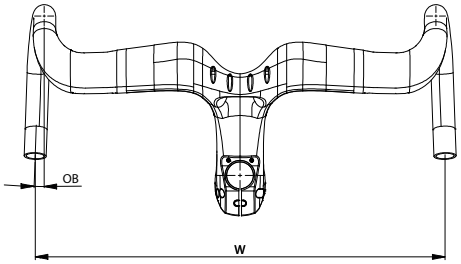

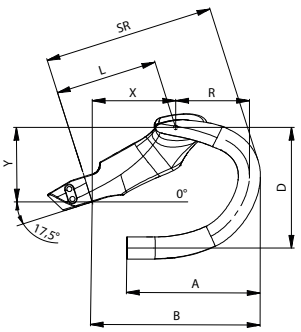

Oltre RC/PRO Integrated Handlebar										
Size	Width (W)	Lenght (L)	Reach (R)	Drop (D)	Stem/HB reach (SR)	Outward bend (OB)	X	Y	A	B
90x400	400	90	80,9	128,3	165,7	2°	72	71,5	143,6	164,5
90x420	420	90	80,9	128,3	165,7	2°	72	71,5	143,6	164,5
90x440	440	90	80,9	128,3	165,7	2°	72	71,5	143,6	164,5
100x400	400	100	79	129,7	173,6	2°	79,6	80,1	143,6	170,5
100x420	420	100	79	129,7	173,6	2°	79,6	80,1	143,6	170,5
100x440	440	100	79	129,7	173,6	2°	79,6	80,1	143,6	170,5
110x400	400	110	79	129,7	183,6	2°	90,1	80,1	143,6	181
110x420	420	110	79	129,7	183,6	2°	90,1	80,1	143,6	181
110x440	440	110	79	129,7	183,6	2°	90,1	80,1	143,6	181
120x400	400	120	79	129,7	193,6	2°	100,6	80,1	143,6	191,4
120x420	420	120	79	129,7	193,6	2°	100,6	80,1	143,6	191,4
120x440	440	120	79	129,7	193,6	2°	100,6	80,1	143,6	191,4
130x400	400	130	79	129,7	203,6	2°	111,1	80,1	143,6	202,1
130x420	420	130	79	129,7	203,6	2°	111,1	80,1	143,6	202,1
130x440	440	130	79	129,7	203,6	2°	111,1	80,1	143,6	202,1
140x400	400	140	79	129,7	213,6	2°	117,8	92	143,6	208,7
140x420	420	140	79	129,7	213,6	2°	117,8	92	143,6	208,7
140x440	440	140	79	129,7	213,6	2°	117,8	92	143,6	208,7

***Frame price does not include cockpit.**

AERO COCKPIT

EXCLUSIVE BIANCHI DESIGN

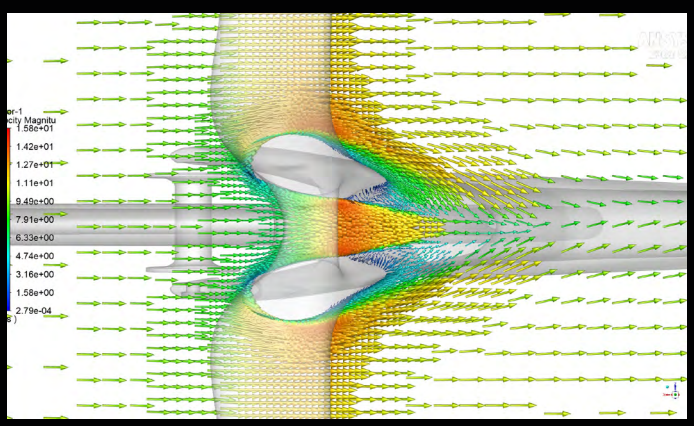

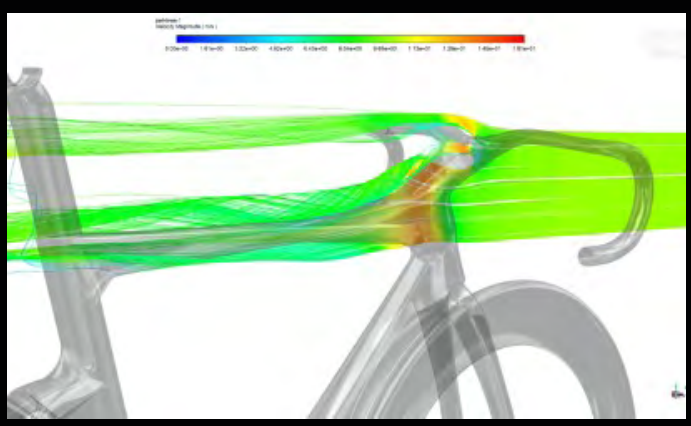

ADVANTAGES_REDUCED AERODYNAMIC DRAG THANKS TO HANDLEBAR AND TOP TUBE INTEGRATION.

OLTRE PRO | SRAM FORCE ETAP AXS | YUB27



The image shown is indicative only. Components and graphic detail may differ from actual model. Bianchi reserves the right to amend specifications and/or prices.

COLOR	ZF - Metallic Celeste/Graphite - full matt ZH - Carbon UD/Pearlized Iridescent - full glossy
FRAME	Oltre PRO carbon w/Bianchi CV System aero shape, electronic drivetrain only, headset 1.1/4-1.1/4,BB-PressFit 86,5x41mm, integrated seat clamp, for flat mount caliper, internal cable routing for disc brakes, thru axle 12x142mm
SEATPOST CLAMP	included in the frame
HEADSET	Fsa No. 54 - MR137 - ACB 1-1/4diam.46.9x diam.37x7 Fsa TH970E - MR168 - Alloy ACB 1-1/4diam.46.8x diam.34x7
FORK	Full Carbon aero w/Bianchi CV System, Disc brakes, integrated head 1.1/4, flat mount caliper, thru axle 12x100mm
SHIFTER	Sram Force eTap AXS D2 Hydraulic Disc Brake
REAR DERAILLEUR	Sram Force eTap AXS D2 12sp
FRONT DERAILLEUR	Sram Force eTap AXS D2
CRANKSET	Sram Force D2, 12sp, Quark power meter, 48/35, Crank Length: 170mm-47/53cm, 172.5mm-55/59cm
BOTTOM BRACKET	Sram Press fit Road 86,5x41
CHAIN	Sram Force D1 12sp

CASSETTE / FREEWHEEL	Sram Force XG-1270 D1, 12sp, 10-11-12-13-14-15-17-19-21-24-28-33T
BRAKE	Sram included in the shifter
DISC ROTOR	Sram Paceline X, centerlock, 160mm front and rear
RIM/WHEELSET	Velomann Plutonium , 50mm profile, 700x21c, 24h, HG body
TIRE	Pirelli P ZERO™ Race SL TLR , 28-622, 120 tpi
STEM	Integrated handlebar Integrated Aero bar, material Carbon, drop 125mm, reach 80mm, Di2 compatible Ext: 90x400-47/50cm ; 100x420-53cm; 110x420-55/57cm; 120x440-59cm
HANDLEBAR	included in the stem
GRIP / TAPE	Bianchi Arrow premium tape, 2.5mm thickness, black
SEATPOST	Oltre Full Carbon Aero special dimension seatpost, 20mm offset, length: 280mm-47cm, 300mm-50/55cm, 350mm-57/59cm
SADDLE	Velomann Mitora139 Lite, open flow, carbon rails 7x9,3mm, carbon-reinforced nylon, Wide: 139mm, Lenght: 250mm

OLTRE PRO | ULTEGRA DI2 12SP | YUB28



The image shown is indicative only. Components and graphic detail may differ from actual model. Bianchi reserves the right to amend specifications and/or prices.

COLOR	ZF - Metallic Celeste/Graphite - full matt ZH - Carbon UD/Pearlized Iridescent - full glossy
FRAME	Oltre PRO carbon w/Bianchi CV System aero shape, electronic drivetrain only, headset 1.1/4-1.1/4,BB-PressFit 86,5x41mm, integrated seat clamp, for flat mount caliper, internal cable routing for disc brakes, thru axle 12x142mm
SEATPOST CLAMP	included in the frame
HEADSET	Fsa No. 54 - MR137 - ACB 1-1/4diam.46.9x diam.37x7 Fsa TH970E - MR168 - Alloy ACB 1-1/4diam.46.8x diam.34x7
FORK	Full Carbon aero w/Bianchi CV System, Disc brakes, integrated head 1.1/4, flat mount caliper, thru axle 12x100mm
SHIFTER	Shimano Ultegra Di2 hydraulic disc brake for road, ST-R8170, BR-R8170, for 160mm rotor
REAR DERAILLEUR	Shimano Ultegra Di2 12sp, RD-R8150
FRONT DERAILLEUR	Shimano Ultegra Di2 12sp, FD-R8150
CRANKSET	Shimano, Ultegra 12sp, FC-R8100, 4iiii precision 3+ power meter, for rear 12- speed, 52x36T, Crank Length: 170mm-47/53cm, 172.5mm-55/59cm
BOTTOM BRACKET	Shimano, SM-BB72-41B, press fit for road, bearing, inner cover
CHAIN	Shimano, Ultegra 12 sp, CN-M8100
CASSETTE / FREEWHEEL	Shimano Ultegra, CS-R8100, 11-12-13-14-15-16-17-19-21-24-27-30T

BRAKE	Shimano BR-R8170 Hydraulic disc brake, included in the shifter
BRAKE LEVER	included
DISC ROTOR	Shimano CL900, centerlock type w/Ice Tech, 160mm front and rear
RIM/WHEELSET	Velomann Plutonium , 50mm profile, 700x21c, 24h, HG body
TIRE	Pirelli P ZERO™ Race SL TLR , 28-622, 120 tpi
STEM	Integrated handlebar Integrated Aero bar, material Carbon, drop 125mm, reach 80mm, Di2 compatible Ext: 90x400-47/50cm; 100x420-53cm; 110x420-55/57cm; 120x440-59cm
HANDLEBAR	included in the stem
GRIP / TAPE	Bianchi Arrow premium tape, 2.5mm thickness, black
SEATPOST	Oltre Full Carbon Aero special dimension seatpost, 20mm offset, length: 280mm-47cm, 300mm-50/55cm, 350mm-57/59cm
SADDLE	Velomann Mitora139 Lite, open flow, carbon rails 7x9,3mm, carbon-reinforced nylon, Wide: 139mm, Lenght: 250mm

OLTRE PRO | FRAMESET | XTB06I



The image shown is indicative only. Components and graphic detail may differ from actual model. Bianchi reserves the right to amend specifications and/or prices.

COLOR	ZF - Metallic Celeste/Graphite - full matt ZH - Carbon UD/Pearlized Iridescent - full glossy
FRAME	Oltre PRO carbon w/Bianchi System aero shape, electronic drivetrain only, headset 1.1/4-1.1/4,BB-PressFit 86,5x41mm, integrated seat clamp, for flat mount caliper, internal cable routing for brakes, thru axle 12x142mm, compatible with 700x30 tire sizes 47-50-53-55-57-59cm
SEATPOST CLAMP	included in the frame
HEADSET	Fsa No. 54 - MR137 - ACB 1-1/4 diam.46.9 x diam.37x7 Fsa TH970R - MR082R - SL Alloy ACB 1-1/4 diam.46.8 x diam.34x7
FORK	Full Carbon aero w/Bianchi System, brakes, integrated head 1.1/4, flat mount caliper, thru axle 12x100mm, compatible with 700x30 tire

*Frame price does not include cockpit.

OLTRE COMP | ULTEGRA DI2 12SP | YTB23



The image shown is indicative only. Components and graphic detail may differ from actual model. Bianchi reserves the right to amend specifications and/or prices.

COLOR	ZN - Metallic Celeste/Black - full glossy ZP - Velvet Navy/Off White- full matt
FRAME	Oltre Comp, carbon, disc brakes, electronic and mechanical shifting compatible, internal cable routing 1.5-1.5 headset, BB-PressFit 86,5x41, flat mount brakes, thru axle 12x142mm sizes 47-50-53-55-57-59cm
SEATPOST CLAMP	included in the frame
HEADSET	Fsa TH-073E ACB 1.5 51.8x40x8
FORK	Full Carbon aero, disc brakes, integrated head 1,5, thru axle 12x100mm, compatible with 700x30 tire
SHIFTER	Shimano Ultegra Di2 hydraulic disc brake for road, ST-R8170, BR-R8170, for 160mm rotor
REAR DERAILLEUR	Shimano Ultegra Di2 12sp, RD-R8150
FRONT DERAILLEUR	Shimano Ultegra Di2 12sp, FD-R8150
CRANKSET	Shimano, Ultegra 12sp, FC-R8100, for rear 12- speed, 52x36T, Crank Length: 170mm-47/53cm, 172.5mm-55/59cm
BOTTOM BRACKET	Shimano, SM-BB72-41B, press fit for road, bearing, inner cover
CHAIN	Shimano, Ultegra 12 sp, CN-M8100
CASSETTE / FREEWHEEL	Shimano Ultegra, CS-R8100, 11-12-13-14-15-16-17-19-21-24-27-30T
BRAKE	Shimano BR-R8170 Hydraulic disc brake, included in the shifter

BRAKE LEVER	included
DISC ROTOR	Shimano center lock type w/Ice Tech, 160mm front rear
RIM/WHEELSET	Velomann Plutonium , 50mm profile, 700x21c, 24h, HG body
TIRE	Vittoria Rubino V 28-622 TLR full black G2.0, graphene + silica, 100TPI,
STEM	Velomann Aero stem, material alloy, Oversize, 1.1/8, size: 90mm-47/50cm, 100mm-53cm, 110mm-55/57cm, 120mm-59cm
HANDLEBAR	Velomann Aero Compact handlebar, alloy diam. 31,8mm, reach 74mm, drop 116mm, for fully internal cable routing Size: 400mm-47~53cm, 420mm-55~59cm
GRIP / TAPE	Bianchi Arrow premium tape, 2.5mm thickness, black
SEATPOST	Oltre Full Carbon Aero special dimension seatpost, 20mm offset, length: 280mm-47cm, 300mm50/55cm, 350mm-57/59cm
SADDLE	Velomann Mitora139, open flow, AISI rails 7x7mm, carbon-reinforced nylon, Wide: 139mm, Lenght: 250mm

OLTRE COMP | RIVAL ETAP AXS 12SP | YTB24



The image shown is indicative only. Components and graphic detail may differ from actual model. Bianchi reserves the right to amend specifications and/or prices.

COLOR	ZN - Metallic Celeste/Black - full glossy ZP - Velvet Navy/Off White- full matt
FRAME	Oltre Comp, carbon, disc brakes, electronic and mechanical shifting compatible, internal cable routing 1.5-1.5 headset, BB-PressFit 86,5x41, flat mount brakes, thru axle 12x142mm sizes 47-50-53-55-57-59cm
SEATPOST CLAMP	included in the frame
HEADSET	Fsa TH-073E ACB 1.5 51.8x40x8
FORK	Full Carbon aero, disc brakes, integrated head 1,5, thru axle 12x100mm, compatible with 700x30 tire
SHIFTER	Sram RIVAL ETAP AXS D1 Hydraulic Disc Brake
REAR DERAILLEUR	Sram RIVAL ETAP AXS D1 MAX 36T
FRONT DERAILLEUR	Sram RIVAL ETAP AXS D1
CRANKSET	Sram RIVAL D1 DUB, 48/35, Crank Length: 170mm-47/53cm, 172.5mm-55/59cm
BOTTOM BRACKET	Sram Press fit Road 86,5x41
CHAIN	Sram RIVAL D1 12S
CASSETTE / FREEWHEEL	Sram CS XG 1250 D1 10-36T
BRAKE	Sram included in the shifter

DISC ROTOR	Sram Centerline, centerlock 160mm front and rear
RIM/WHEELSET	Velomann Plutonium , 50mm profile, 700x21c, 24h, HG body
TIRE	Vittoria Rubino V 28-622 TLR full black G2.0, graphene + silica, 100TPI,
STEM	Velomann Aero stem, material alloy, Oversize, 1.1/8, size: 90mm-47/50cm, 100mm-53cm, 110mm-55/57cm, 120mm-59cm
HANDLEBAR	Velomann Aero Compact handlebar, alloy diam. 31,8mm, reach 74mm, drop 116mm, for fully internal cable routing Size: 400mm-47~53cm, 420mm-55~59cm
GRIP / TAPE	Bianchi Arrow premium tape, 2.5mm thickness, black
SEATPOST	Oltre Full Carbon Aero special dimension seatpost, 20mm offset, length: 280mm-47cm, 300mm50/55cm, 350mm-57/59cm
SADDLE	Velomann Mitora139, open flow, AISI rails 7x7mm, carbon-reinforced nylon, Wide: 139mm, Lenght: 250mm

OLTRE COMP | 105 DI2 12SP | YTB26



DRAFT-NOT FINAL COMPONENTS-DRAFT-NOT FINAL COMPONENTS-
DRAFT-NOT FINAL COMPONENTS-DRAFT-NOT FINAL COMPONENTS-

The image shown is indicative only. Components and graphic detail may differ from actual model. Bianchi reserves the right to amend specifications and/or prices.

COLOR	ZN - Metallic Celeste/Black - full glossy ZP - Velvet Navy/Off White- full matt
FRAME	Oltre Comp, carbon, disc brakes, electronic and mechanical shifting compatible, internal cable routing 1.5-1.5 headset, BB-PressFit 86,5x41, flat mount brakes, thru axle 12x142mm sizes 47-50-53-55-57-59cm
SEATPOST CLAMP	included in the frame
HEADSET	Fsa TH-073E ACB 1.5 51.8x40x8
FORK	Full Carbon aero, disc brakes, integrated head 1,5, thru axle 12x100mm, compatible with 700x30 tire
SHIFTER	Shimano 105 Di2 hydraulic disc brake for road, ST-R7170, BR-R7170, for 160mm rotor
REAR DERAILLEUR	Shimano, 105 Di2 RD-R7150, 12-speed
FRONT DERAILLEUR	Shimano 105 Di2, FD-R7150 12-speed
CRANKSET	Shimano 105 12sp, FC-R7100, Ultegra hollowtech 2, for rear 12- speed, 50x34T, Crank Length: 170mm-47/53cm, 172.5mm-55/59cm
BOTTOM BRACKET	Shimano, SM-BB72-41B, press fit for road, bearing, inner cover
CHAIN	Shimano, 105 12sp, CN-M7100
CASSETTE / FREEWHEEL	Shimano, 105 12sp, CS-R7100, 11-12-13-14-15-17-19-21-24-27-30-34T
BRAKE	Shimano BR-R8170 Hydraulic disc brake, included in the shifter

BRAKE LEVER	included
DISC ROTOR	Shimano RT70 rotor for disc brake center lock, 160mm front and rear
RIM/WHEELSET	Velomann Plutonium , 50mm profile, 700x21c, 24h, HG body
TIRE	Vittoria Rubino V 28-622 TLR full black G2.0, graphene + silica, 100TPI,
STEM	Velomann Aero stem, material alloy, Oversize, 1.1/8, size: 90mm-47/50cm, 100mm-53cm, 110mm-55/57cm, 120mm-59cm
HANDLEBAR	Velomann Aero Compact handlebar, alloy diam. 31,8mm, reach 74mm, drop 116mm, for fully internal cable routing Size: 400mm-47~53cm, 420mm-55~59cm
GRIP / TAPE	Bianchi Arrow premium tape, 2.5mm thickness, black
SEATPOST	Oltre Full Carbon Aero special dimension seatpost, 20mm offset, length: 280mm-47cm, 300mm50/55cm, 350mm-57/59cm
SADDLE	Velomann Mitora139, open flow, AISI rails 7x7mm, carbon-reinforced nylon, Wide: 139mm, Lenght: 250mm

OLTRE RACE

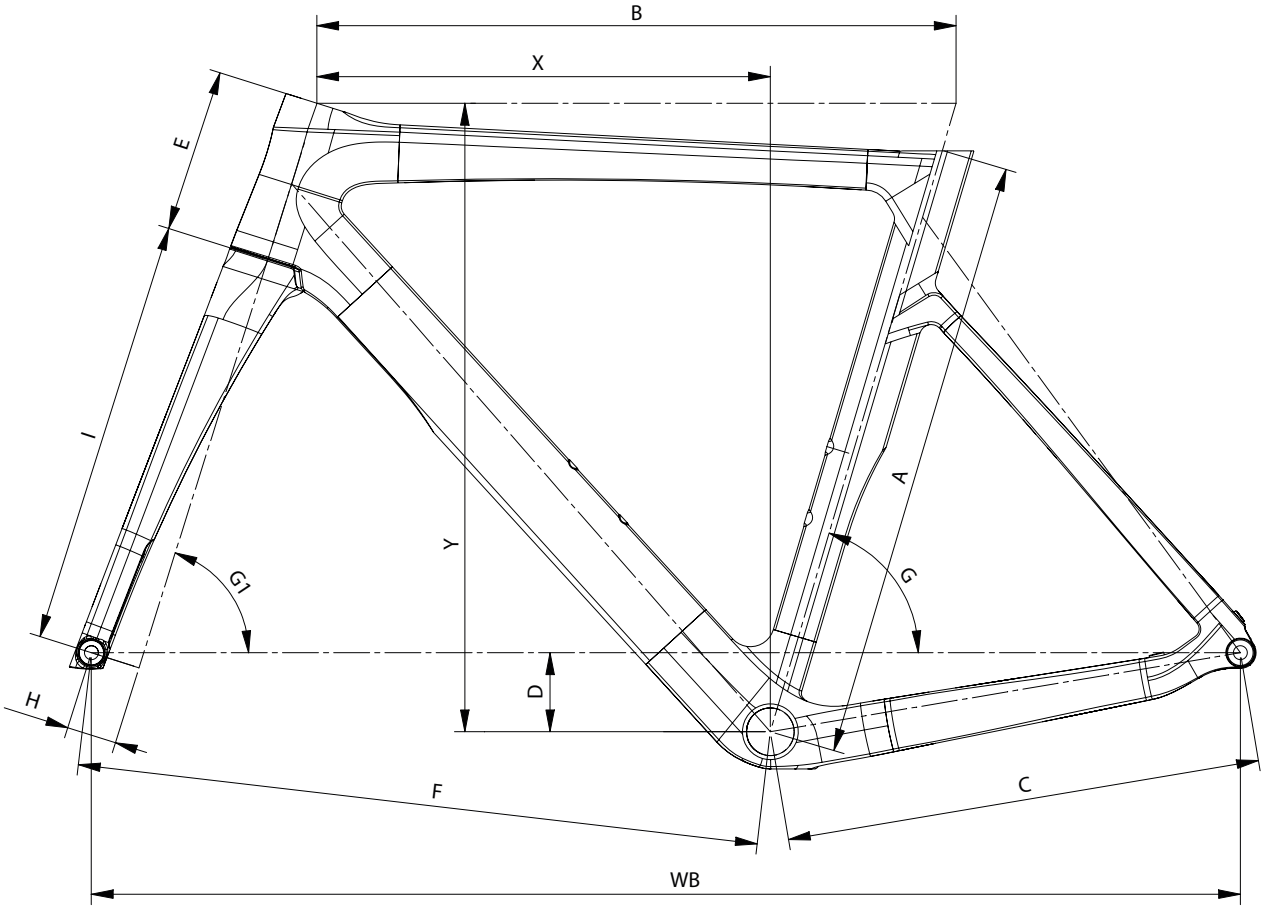

Oltre Race													
SIZE	A	B	C	D	E	F	G	G1	H	I	X	Y	WB
440	420	505	410	58	95	575	75°	70.5°	43	368	376	481	977
470	440	515	410	58	105	581	74.5°	70.5°	43	368	379	490	982
500	470	525	410	58	110	582	74.5°	71.5°	43	368	387	499	983
530	500	535	410	68	125	583	74°	72°	43	368	385	525	984
550	520	550	410	68	140	588	73.5°	72.5°	43	368	390	541	988
570	540	560	410	68	155	593	73.5°	73°	43	368	395	557	994
590	560	575	412	68	175	603	73°	73°	43	368	397	576	1006
610	580	585	414	68	195	607	72.5°	73°	43	368	398	595	1012

OLTRE RACE | 105 DI2 12SP | YTB37



The image shown is indicative only. Components and graphic detail may differ from actual model. Bianchi reserves the right to amend specifications and/or prices.

COLOR	ZK- CK16/Metallic Celeste- full glossy ZL - Grey/Black- full matt
FRAME	Oltre Race aero carbon, compatible with mechanical/electronic transmissions, compatible with internal cable routing, BB-PressFit 86,5x41, integrated seat clamp, disc brake flat mount, thru axle 12x142 sizes 44-47-50-53-55-57-59-61cm
SEATPOST CLAMP	included in the frame
HEADSET	ACROS & FSA, for internal cable routing
FORK	Full Carbon Aero Road, integrated head , disc brake flat mount, thru axle 12x100
SHIFTER	Shimano 105 Di2 hydraulic disc brake for road, ST-R7170, BR-R7170, for 160mm rotor
REAR DERAILLEUR	Shimano, RD-R7150, 105 Di2 12-speed
FRONT DERAILLEUR	Shimano 105 Di2 12sp, FD-R7150
CRANKSET	Shimano 105 12sp, FC-R7100, hollowtech 2, for rear 12- speed, 50x34T Crank Length: 165mm-44cm, 170mm-47/53cm, 172.5mm-55/59cm, 175-61cm
BOTTOM BRACKET	Token Ninja Lite BB4124PS, for 24mm spindle, threaded design
CHAIN	Shimano, 105 12sp, CN-M7100
CASSETTE / FREEWHEEL	Shimano, 105 12sp, CS-R7100, 11-12-13-14-15-17-19-21-24-27-30-34T

BRAKE	Shimano BR-R7170 Hydraulic disc brake, included in the shifter
BRAKE LEVER	included
DISC ROTOR	Shimano rotor for disc brake center lock, 160mm
RIM/WHEELSET	Velomann V30R, alloy, 23mm channel, 30mm profile. 2 to 1 spoke pattern, j-bend spokes, black, HG11 boby, weight : 1790g
TIRE	Vittoria Rubino V 28-622 TLR full black G2.0, graphene + silica, 100TPI,
STEM	Velomann, Alloy 6061, raise - 7° Ext: 80mm-44cm, 90mm-47/50cm, 100mm-53cm, 110mm-55/57cm, 120mm-59/61cm
HANDLEBAR	Velomann Aero Compact, alloy 6061 diam. 31,8mm, reach 74mm, drop 116mm Size: 400mm-47/53cm, 420mm-55/59cm, 440mm-61cm
GRIP / TAPE	Bianchi Hexagon tape, 2.5mm thickness, black
SEATPOST	Velomann Full Carbon Aeroshape, special Clamp type with alloy head adjustable and reversible +/- 35mm; lenght: 250mm-44, 300mm-47/50cm, 350mm-53/61cm
SADDLE	Velomann Mitora 139.1, open flow, steel rails 7x7mm, carbon-reinforced nylon, Wide: 139mm, Lenght: 250mm

OLTRE RACE | 105 12SP | YTB8D



The image shown is indicative only. Components and graphic detail may differ from actual model. Bianchi reserves the right to amend specifications and/or prices.

COLOR	ZK- CK16/Metallic Celeste- full glossy ZL - Grey/Black- full matt
FRAME	Olyre Race aero carbon, compatible with mechanical/electronic transmissions, compatible with internal cable routing, BB-PressFit 86,5x41, integrated seat clamp, disc brake flat mount, thru axle 12x142 sizes 44-47-50-53-55-57-59-61cm
SEATPOST CLAMP	included in the frame
HEADSET	ACROS & FSA, for internal cable routing
FORK	Full Carbon Aero Road, integrated head , disc brake flat mount, thru axle 12x100
SHIFTER	Shimano 105 hydraulic disc brake for road, ST-R7120, BR-R7170, for 160mm rotor
REAR DERAILLEUR	Shimano 105 12sp, RD-R7100
FRONT DERAILLEUR	Shimano 105 12sp, FD-R7100
CRANKSET	Shimano 105 hollowtech 2, 50x34T Crank Length: 165mm-44cm, 170mm-47/53cm, 172.5mm-55/59cm, 175-61cm
BOTTOM BRACKET	Token Ninja Lite BB4124PS, for 24mm spindle, threaded design
CHAIN	Shimano CN-M6100, 12sp
CASSETTE / FREEWHEEL	Shimano, 105 12sp, CS-R7100, 11-12-13-14-15-17-19-21-24-27-30-34T
BRAKE	Shimano Hydraulic disc brake, included in the shifter
BRAKE LEVER	included

DISC ROTOR	Shimano rotor for disc brake center lock, 160mm
RIM/WHEELSET	Velomann V30R, alloy, 23mm channel, 30mm profile. 2 to 1 spoke pattern, j-bend spokes, black, HG11 boby, weight : 1790g
TIRE	Vittoria Rubino V 28-622 TLR full black G2.0, graphene + silica, 100TPI,
STEM	Velomann, Alloy 6061, raise - 7° Ext: 80mm-44cm, 90mm-47/50cm, 100mm-53cm, 110mm-55/57cm, 120mm-59/61cm
HANDLEBAR	Velomann Aero Compact, alloy 6061 diam. 31,8mm, reach 74mm, drop 116mm Size: 400mm-47/53cm, 420mm-55/59cm, 440mm-61cm
GRIP / TAPE	Bianchi Hexagon tape, 2.5mm thickness, black
SEATPOST	Velomann Full Carbon Aeroshape, special Clamp type with alloy head adjustable and reversible +/- 35mm; lenght: 250mm-44, 300mm-47/50cm, 350mm-53/61cm
SADDLE	Velomann Mitora 139.1, open flow, steel rails 7x7mm, carbon-reinforced nylon, Wide: 139mm, Lenght: 250mm

ROAD RACING
ALL ROUNDER

SPECIALISSIMA RC

SPECIALISSIMA PRO

SPECIALISSIMA COMP

SPRINT

SPECIALISSIMA

RC



THE IDEA

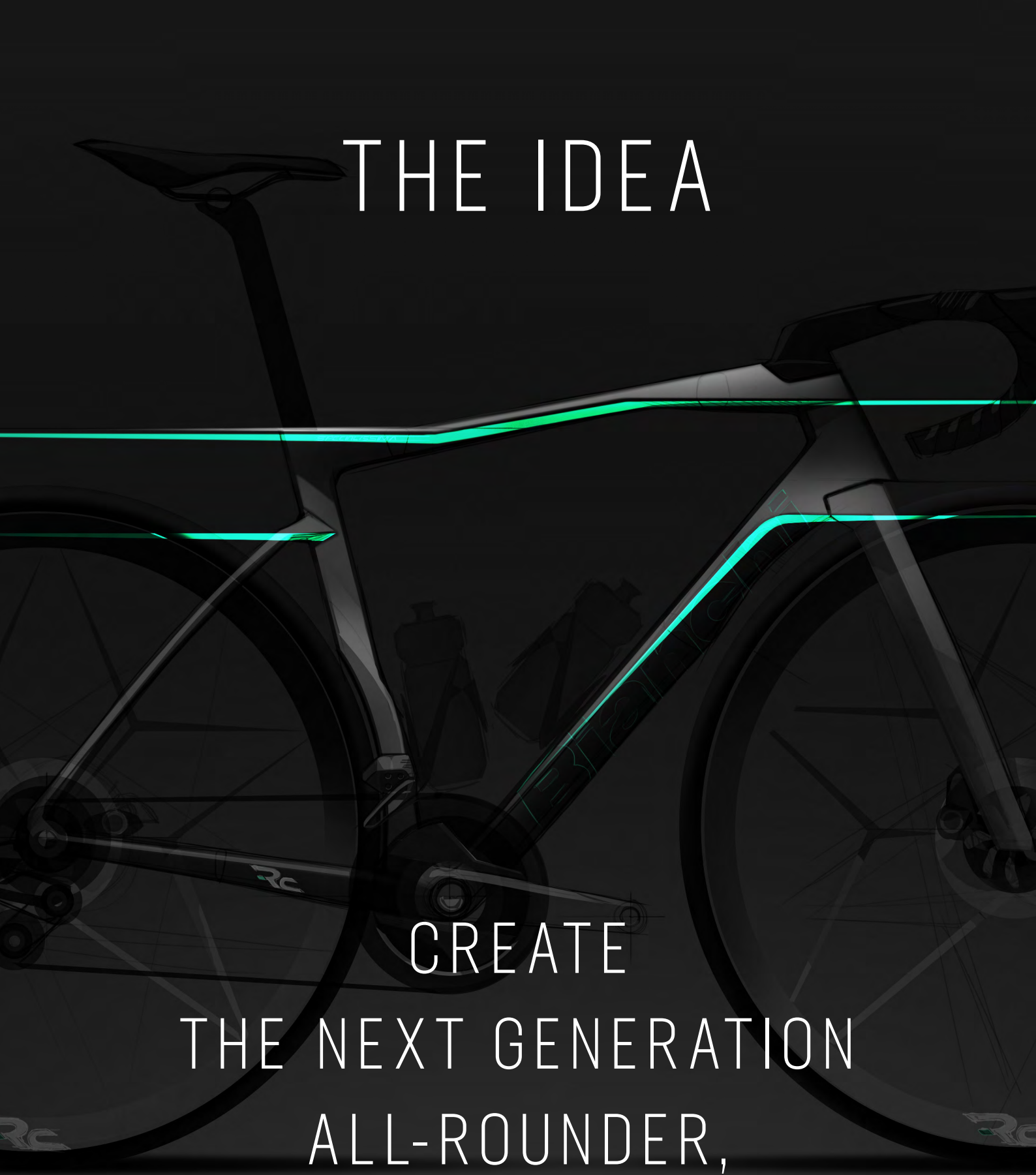

CREATE
THE NEXT GENERATION
ALL-ROUNDER,
WITHOUT
COMPROMISE.

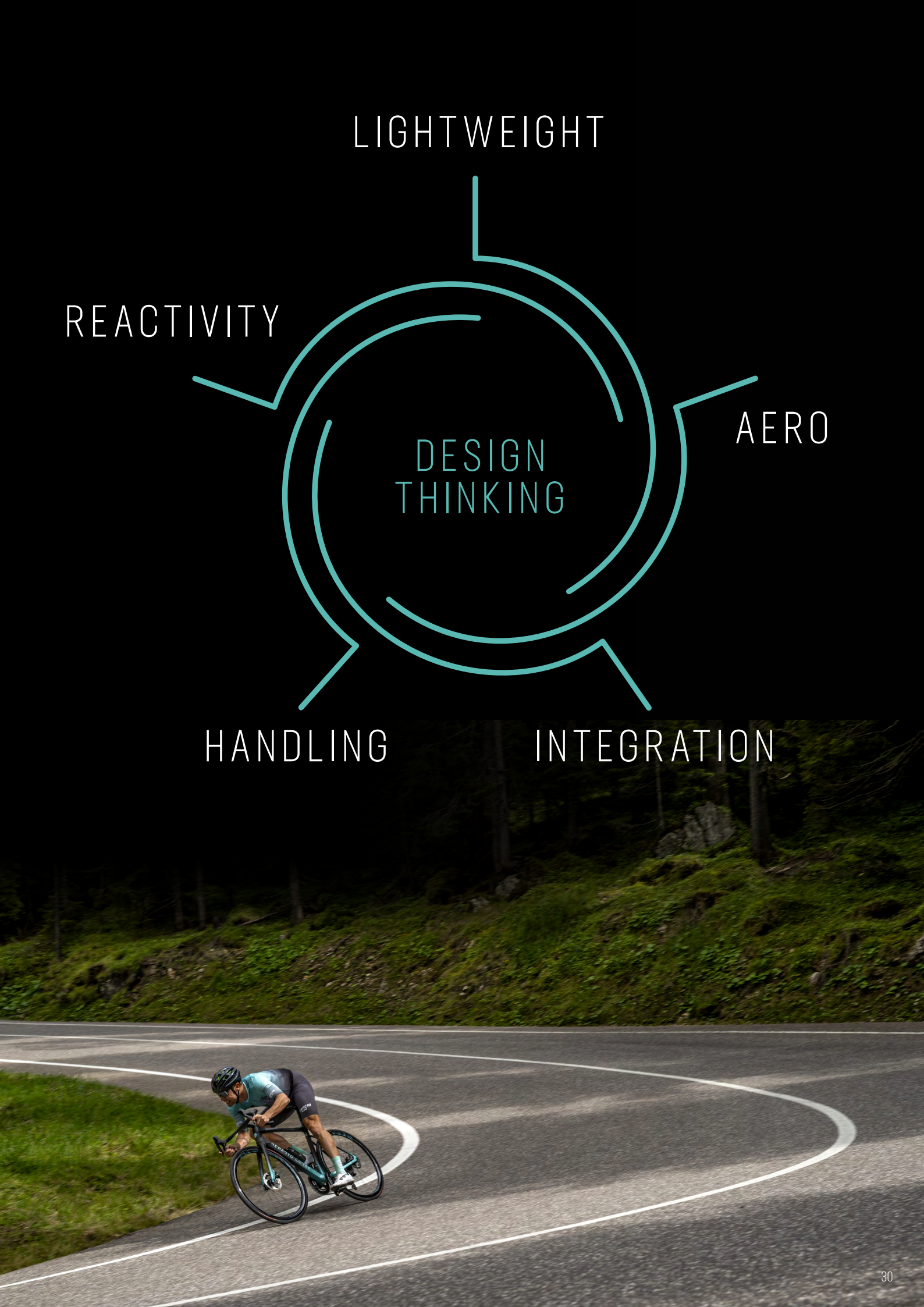
LIGHTWEIGHT
REACTIVITY
AERO
DESIGN
THINKING
HANDLING
INTEGRATION

WHY CAN'T LIGHT BE AERO?



BIANCHI
SPECIALISSIMA RC
REPARTO CORSE

This was the question that prompted Reparto Corse to re-design the Specialissima. The answer was a bike with increased aero efficiency at lower gradient inclines, combined with excellent reactivity and a lower overall weight.

The next-gen Specialissima says no to compromise, giving you the very best tool for mountains and steep gradients. The Specialissima is impressively light at just 6.6kg for the entire bike, and with world-class stiffness-to-weight, it climbs with venom. The aero-optimised frame and proprietary componentry ensure you can also excel on the flat roads and technical descents that come before and after the climb.



6.60KG*

FOR THE ENTIRE BIKE

This bike gives elite professional riders more tools in their repertoire, more options for attacking the parcours, an extra weapon in their competitive arsenal. In fact, it turns the whole concept of 'allrounder' on its head.

*SIZE 55, +/- 5%

PUSHING THRESHOLD

In response to our WorldTour athletes' feedback, we wanted to make the Specialissima a more efficient performer in the mountains. That meant upping the aero performance while preserving world-class stiffness-to-weight, so that at lower gradient inclines it could still provide a competitive advantage.

It took precision engineering to get here. Our racing division, Reparto Corse, set out to shift the tipping point of climbing gradient and pow er output at which the Specialissima could outperform an aero bike.

We call this tipping point where one bike becomes the better choice over the other, the Threshold.

Where the previous generation Specialissima did not become a more efficient choice for pro riders until the gradients hit 8.8%, Reparto Corse has successfully pushed the Threshold down to 6.2%.

RIDER LEVEL: PRO, UCI WORLD TOUR | 420 WATTS OR 6 W/KG | 10 KM COURSE

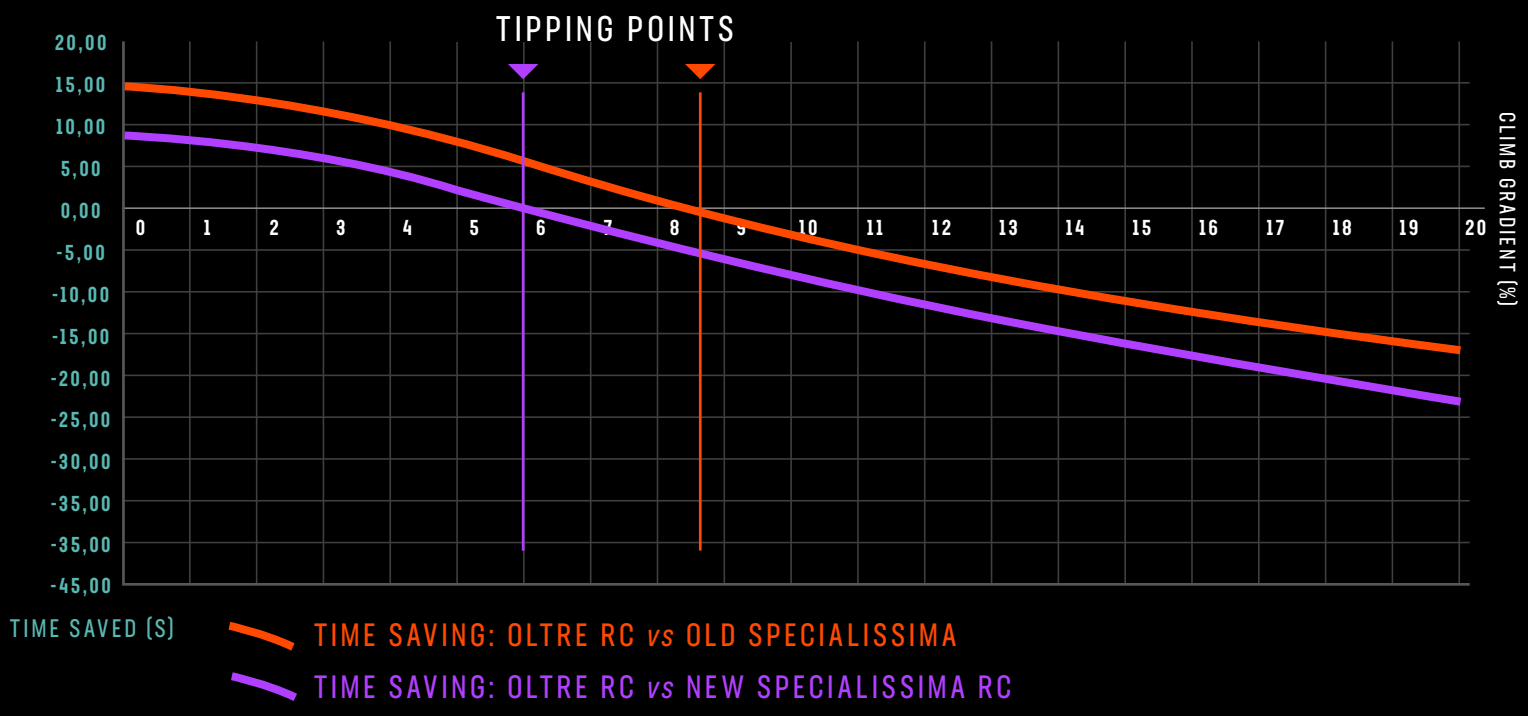

RIDER LEVEL: HIGH AMATEUR | 300 WATTS OR 4.3 W/KG | 10 KM COURSE

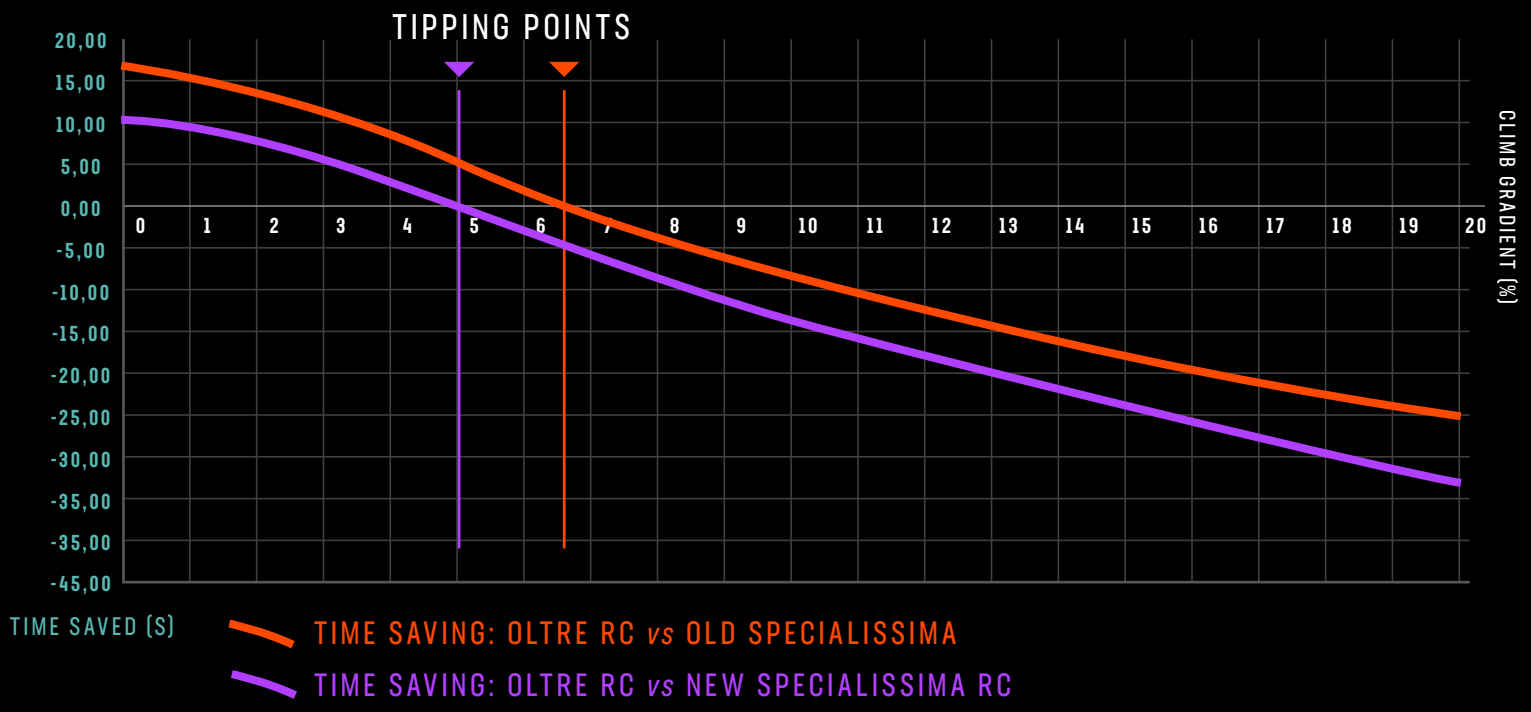

RIDER LEVEL: MEDIUM AMATEUR | 250 WATTS OR 3.6 W/KG | 10 KM COURSE

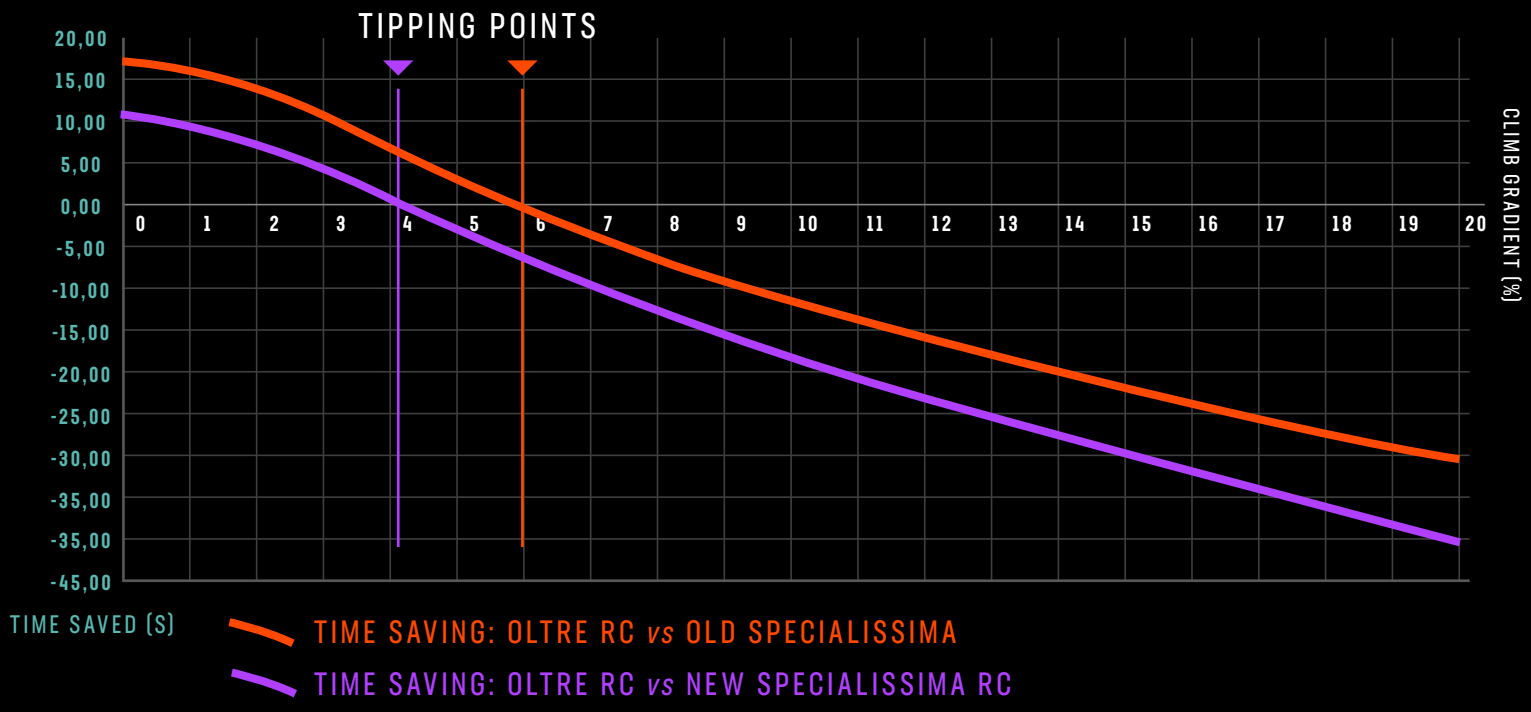

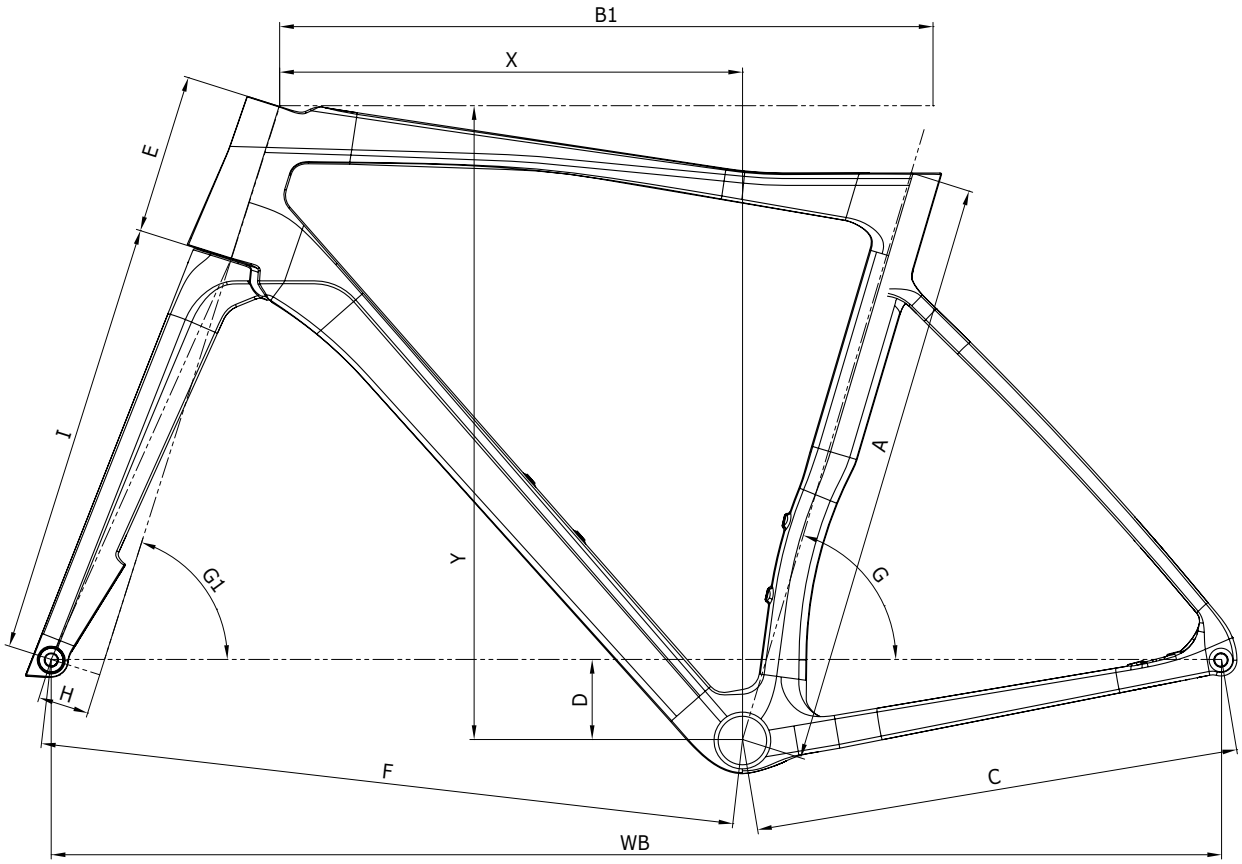

Specialissima RC / Specialissima PRO / Specialissima COMP													
SIZE	A	B1	C	D	E	F	G	G1	H	I	X	Y	WB
470	420	514	410	58	100	579	74.5°	70.5°	43	368	379	486	982
500	450	524	410	58	105	581	74.5°	71.5°	43	368	387	494	983
530	480	535	410	68	120	582	74°	72°	43	368	386	520	984
550	500	550	410	68	135	588	73.5°	72.5°	43	368	391	536	988
570	520	560	412	68	150	593	73.5°	73°	43	368	397	552	996
590	540	575	412	68	170	603	73°	73°	43	368	400	571	1005

SPECIALISSIMA RC TEAM REPLICA | DURACE DI2 12SP | YTB04



The image shown is indicative only. Components and graphic detail may differ from actual model. Bianchi reserves the right to amend specifications and/or prices.

COLOR	MR-Carbon/Celeste Metallic - CK16 full Matt
FRAME	Specialissima RC carbon HM, only electronic groupsets, fully internal cable routing, headset Acros ICR, direct mount brakes, BB-PressFit 86,5x41 sizes 47-50-53-55-57-59cm
SEATPOST CLAMP	included in the frame
HEADSET	Acros IS52 ICR Ssbearings
FORK	Specialissima RC full Carbon HM aero, integrated head, disc, 1.5" head, 12x100mm thru axle
SHIFTER	Shimano Durace Di2 hydraulic disc brake for road ST-R9270(L), BR-R9270(F) ST-R9270(R), BR-R9270(R)
REAR DERAILLEUR	Shimano Durace Di2 12sp RD-R9250, DURA-ACE Di2 12-speed
FRONT DERAILLEUR	Shimano Durace Di2 12sp FD-R9250, DURA-ACE Di2, brazed-on type
CRANKSET	Shimano Durace 12sp FC-R9200-P, DURA-ACE power meter, hollowtech 2, for rear 12- speed, 170-172mm, 52x36T Crank Length: 170mm-47~53cm, 172.5mm-55~59cm
BOTTOM BRACKET	Shimano SM-BB92-41B , press fit type for road
CHAIN	Shimano Durace 12 sp CN-M9100, 112link for HG 12- speed, w/quick link
CASSETTE / FREEWHEEL	Shimano Durace 12sp 11-30T CS-R9200 DURA-ACE 12sp, 11-12-13-14-15-16-17-19-21-24-27-30T

BRAKE	Shimano BR-R9270 Hydraulic disc brake included in the shifter
BRAKE LEVER	included
DISC ROTOR	Shimano RT-CL900 center lock type w/Ice Tech, 160mm front, 140mm rear
RIM/WHEELSET	VISION WH Set METRON45 SL disc brake center lock, tubless ready
TIRE	Vittoria Corsa Pro 28-622 TLR G2.0 320TPI
STEM	Reparto Corse integrated handlebar, material Carbon, for Acros ICR system drop 125mm, reach 80mm Ext: 90/380 ; 100/400 ; 110/400; 120/420
HANDLEBAR	included in the stem
GRIP / TAPE	Ribbon cork celeste
SEATPOST	Specialissima Full Carbon Aero special dimension seatpost, 20mm offset, length: 280mm-47cm, 300mm-50~53cm, 350mm-55~59cm
SADDLE	Selleltalia SLR BOOST PRO TEAM kit carbonio superlow, S3, 130x248mm

SPECALISSIMA RC | SRAM RED ETAP AXS 12SP | YUB40



The image shown is indicative only. Components and graphic detail may differ from actual model. Bianchi reserves the right to amend specifications and/or prices.

COLOR	MR - Carbon/CK16 Metallic/CK16
FRAME	Specialissima RC carbon HM, only electronic groupsets, fully internal cable routing, headset Acros ICR, direct mount brakes, BB-PressFit 86,5x41 sizes 47-50-53-55-57-59cm
HEADSET	Acros IS52 ICR SSbearings: custom headtube cover Specialissima 35mm spacers
FORK	Specialissima RC full Carbon HM aero, integrated head, disc, 1.5 head, 12x100mm thru axle
SHIFTER	Sram Red eTap AXS E1 Hydraulic Disc Brake
REAR DERAILLEUR	Sram Red eTap AXS D1 12sp
FRONT DERAILLEUR	Sram Red eTap AXS E1
CRANKSET	Sram Red E1, 12sp, Quark power meter, 48/35, Crank Length: 170mm-47/53cm, 172.5mm-55/59cm
BOTTOM BRACKET	Sram Press fit Road 86,5x41
CHAIN	Sram Red E1, 114 links

CASSETTE / FREEWHEEL	Sram Red XG 1290, E1, 10-33, 10-11-12-13-14-15-17-19-21-24-28-33T
BRAKE	included in the shifter
DISC ROTOR	Sram Paceline X, centerlock, 160mm front 140mm rear
RIM/WHEELSET	Reparto Corse 33R Ceramitech 33mm profile, 700x21c, 24h, XDR
TIRE	Pirelli P ZERO™ Race TLR RS , 28-622, 120TPI
STEM	Reparto Corse integrated handlebar, material Carbon, for Acros ICR system drop 125mm, reach 80mm Ext: 90/380 (47-50cm) ; 100/400 (53cm) ; 110/400 (55-57cm); 120/420 (59cm)
HANDLEBAR	included in the stem
GRIP / TAPE	Bianchi Arrow premium tape, 2.5mm thickness, black
SEATPOST	Specialissima Full Carbon Aero special dimension seatpost, 20mm offset, length: 280mm-47cm, 300mm-50/53cm, 350mm-55/59cm
SADDLE	Reparto Corse Rc139Carbon, full carbon, open flow, Large 139mm Lenght 250mm

SPECIALISSIMA RC | DURA-ACE DI2 12SP | YUB42



The image shown is indicative only. Components and graphic detail may differ from actual model. Bianchi reserves the right to amend specifications and/or prices.

COLOR	MR - Carbon/CK16 Metallic/CK16
FRAME	Specialissima RC carbon HM, only electronic groupsets, fully internal cable routing, headset Acros ICR, direct mount brakes, BB-PressFit 86,5x41 sizes 47-50-53-55-57-59cm
HEADSET	Acros IS52 ICR SSbearings: custom headtube cover Specialissima
FORK	Specialissima RC full Carbon HM aero, integrated head, disc, 1.5 head, 12x100mm thru axle
SHIFTER	Shimano Dura-Ace Di2, ST-R9270(L), BR R9270(F)
REAR DERAILLEUR	Shimano, FD-R9250, Dura-Ace Di2
FRONT DERAILLEUR	Shimano, FD-R9250, Dura-Ace Di2
CRANKSET	Shimano, Dura-Ace 12sp, FC-R9200, 4iiii precision 3 + dual side power meter, 52x36T, Crank Length: 170mm-47/54cm, 172.5mm-55/59cm
BOTTOM BRACKET	Shimano SM-BB92-41B , press fit type for road
CHAIN	Shimano Durace, CN-M9100, 12sp
CASSETTE / FREEWHEEL	Shimano, CS-R9200 DURA-ACE 12sp, 11-12-13-14-15-16-17-19-21-24-27-30T

BRAKE	Shimano BR-R9270 Hydraulic disc brake included in the shifter
BRAKE LEVER	included
DISC ROTOR	Shimano RT-CL900 center lock type w/Ice Tech, 160mm front, 140mm rear
RIM/WHEELSET	Reparto Corse 33R Ceramitech 33mm profile, 700x21c, 24h, HG11
TIRE	Pirelli P ZERO™ Race TLR RS , 28-622, 120TPI
STEM	Reparto Corse integrated handlebar, material Carbon, for Acros ICR system drop 125mm, reach 80mm Ext: 90/380 (47-50cm) ; 100/400 (53cm) ; 110/400 (55-57cm); 120/420 (59cm)
HANDLEBAR	included in the stem
GRIP / TAPE	Bianchi Arrow premium tape, 2.5mm thickness, black
SEATPOST	Specialissima Full Carbon Aero special dimension seatpost, 20mm offset, length: 280mm-47cm, 300mm-50/53cm, 350mm-55/59cm
SADDLE	Reparto Corse Rc139Carbon, full carbon, open flow, Large 139mm Lenght 250mm

SPECALISSIMA RC | REPARTO CORSE 33R CERAMITECH - FRONT



The image shown is indicative only. Components and graphic detail may differ from actual model. Bianchi reserves the right to amend specifications and/or prices.

SPOKES	N°16 straight pull + N°8 J-bend, flat, AISI 302+ Spoke pattern 2 to 1 Nipples: Alloy with secure lock
HUB	• Hub bodies: Aluminium alloy 6082 • Free wheel body: Aluminium alloy 7075 • Hub width: 100mm • Axle type: 12 mm Aluminium thru axle • Sealed cartridge bearings with CERAMIC balls • Brake interface: Center Lock
RIM	• ASTM classification: 1 • Material: 3K - high modulus carbon textile • Finish: Shiny with fading effect • Tyre compatibility: tubeless-ready and clincher • Recommended tyre size: 700c, from 25 mm • Rim height: 33 mm (external width 28 mm) • Internal width: 21 mm • Decals: Water transfer under flatting
TYRES	• Tubeless ready • Clincher
WEIGHT	635g

SPECALISSIMA RC | REPARTO CORSE 33R CERAMITECH - REAR



The image shown is indicative only. Components and graphic detail may differ from actual model. Bianchi reserves the right to amend specifications and/or prices.

SPOKES	N°16 straight pull + N°8 J-bend, flat, AISI 302+ Spoke pattern 2 to 1 Nipples: Alloy with secure lock
COMPATIBILITY	• HG FW body • XDR FW body • N3W FW body
HUB	• Hub bodies: Aluminium alloy 6082 • Free wheel body: Aluminium alloy 7075 • Ratchet system 5 pawls + 5 springs (45 teeth) • Hub width: 142 mm • Axle type: 12 mm Aluminium thru axle • Sealed cartridge bearings with CERAMIC balls • Brake interface: Center Lock
RIM	• ASTM classification: 1 • Material: 3K - high modulus carbon textile • Finish: Shiny with fading effect • Tyre compatibility: tubeless-ready and clincher • Recommended tyre size: 700c, from 25 mm • Rim height: 33 mm (external width 28 mm) • Internal width: 21 mm • Decals: Water transfer under flatting
TYRES	• Tubeless ready • Clincher
WEIGHT	735g

SPECIALISSIMA RC | REPARTO CORSE 139RC CARBON



The image shown is indicative only. Components and graphic detail may differ from actual model. Bianchi reserves the right to amend specifications and/or prices.

DATA SHEET	• Lenght: 250 mm • Wide: 139 mm • Weight: 130 g* • Height to 72 mm (C.o.b.): 41 mm • Rails: 7 x 9,3 mm
TECHNOLOGY	• Cover: tessuto microfibra • Padding: gravitech • Inserts: PWR gel • Shell: carbon fiber • Rails: carbon

SPECIALISSIMA RC | FRAMEKIT | XTB07



The image shown is indicative only. Components and graphic detail may differ from actual model. Bianchi reserves the right to amend specifications and/or prices.

COLOR	MR - Carbon/CK16 Metallic/CK16
FRAME	Specialissima RC carbon HM, only electronic groupsets, fully internal cable routing, headset Acros ICR, direct mount brakes, BB-PressFit 86,5x41 sizes 47-50-53-55-57-59cm
HEADSET	Acros IS52 ICR SSbearings
FORK	Specialissima RC full Carbon HM aero, integrated head, disc, 1.5" head, 12x100mm thru axle
SEATPOST	Specialissima Full Carbon Aero special dimension seatpost, 20mm offset, length: 280mm-47cm, 300mm-50/53cm, 350mm-55/59cm

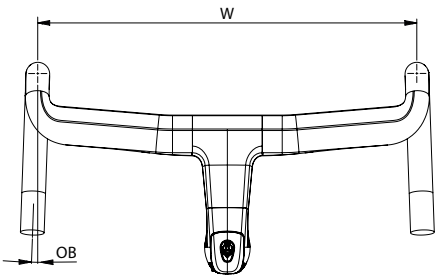

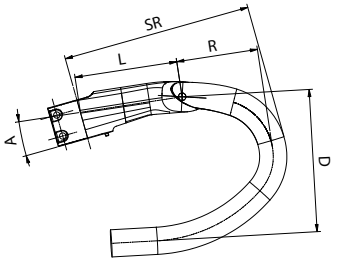

Specialissima RC/PRO Integrated Handlebar (C2306194)							
Size	Width (W)	Lenght (L)	Reach (R)	Drop (D)	Stem/HB reach (SR)	Outward bend (OB)	Angle (A)
90x380	380	90	72,6	124,8	167	2°	-7°
90x400	400	90	72,6	124,8	167	2°	-7°
90x420	420	90	72,6	124,8	167	2°	-7°
100x380	380	100	72,6	124,8	177	2°	-7°
100x400	400	100	72,6	124,8	177	2°	-7°
100x420	420	100	72,6	124,8	177	2°	-7°
110x380	380	110	72,6	124,8	187	2°	-7°
110x400	400	110	72,6	124,8	187	2°	-7°
110x420	420	110	72,6	124,8	187	2°	-7°
120x380	380	120	72,6	124,8	197	2°	-7°
120x400	400	120	72,6	124,8	197	2°	-7°
120x420	420	120	72,6	124,8	197	2°	-7°
120x440	440	120	72,6	124,8	197	2°	-7°
130x380	380	130	72,6	124,8	207	2°	-7°
130x400	400	130	72,6	124,8	207	2°	-7°
130x420	420	130	72,6	124,8	207	2°	-7°
130x440	440	130	72,6	124,8	207	2°	-7°

*Frame price does not include cockpit.

Crucial to its new and improved aero performance is the Specialissima's integrated handlebar. Available in five lengths and with a full carbon construction, it weighs just 330g for the 110mm x 380mm option. It's compatible with Acros internal cable routing and offers a 73mm reach with 125mm drop and a 2° flare.

To ensure that more riders can experience the epic performance of the Specialissima RC handlebar, our engineers have ensured it is fully cross-compatible with the Pro and Comp models, should owners wish to upgrade after purchase.

COCKPIT

COMPATIBLE WITH ACROS ICR internal cable routing

FROM 90 TO 130MM AND FROM 380 TO 440MM (C-C) IN WIDTH



FULL CARBON
330G OF WEIGHT
110x38

REACH 73MM DROP
125MM
2° FLARE ANGLE

2-BOLT COMPUTER MOUNT COMPATIBLE

SPECIALISSIMA PRO | SRAM FORCE ETAP AXS | YUB43



The image shown is indicative only. Components and graphic detail may differ from actual model. Bianchi reserves the right to amend specifications and/or prices.

COLOR	MW - Carbon/Ckmetallic/CK16 MV - Carbon/Graphite irid/Black
FRAME	Specialissima PRO carbon HM with Bianchi CV System, only electronic groupsets, fully internal cable routing, headset Acros ICR, direct mount brakes, BB-PressFit 86,5x41 sizes 47-50-53-55-57-59cm
HEADSET	Acros IS52 ICR custom headtube cover Specialissima
FORK	Specialissima PRO full Carbon HM with CV, aero, integrated head, disc, 1.5 head, 12x100mm thru axle
SHIFTER	Sram Force eTap AXS D2 Hydraulic Disc Brake, 20mm Flat Mount
REAR DERAILLEUR	Sram Force eTap AXS D2 12sp
FRONT DERAILLEUR	Sram Force eTap AXS D2 braze on
CRANKSET	Sram Force D2 12sp, Quark power meter, 48/35T Crank Length: 170mm-47/53cm, 172.5mm-55/59cm
BOTTOM BRACKET	Sram Press fit Road 86,5x41
CHAIN	Sram Force D1 12sp

CASSETTE / FREEWHEEL	Sram Force XG-1270 D1 12sp, 10-11-12-13-14-15-17-19-21-24-28-33T
BRAKE	included in the shifter
DISC ROTOR	Sram Paceline X, centerlock, 160mm front and rear
RIM/WHEELSET	Velomann Palladium , 33mm profile, 700x21c, 24h, XDR body
TIRE	Pirelli P ZERO™ Race TLR RS , 28-622, 120TPI
STEM	Reparto Corse integrated handlebar, material Carbon, for Acros ICR system drop 125mm, reach 80mm Ext: 90/380 (47-50cm) ; 100/400 (53cm) ; 110/400 (55-57cm); 120/420 (59cm)
HANDLEBAR	included in the stem
GRIP / TAPE	Bianchi Arrow premium tape, 2.5mm thickness, black
SEATPOST	Specialissima Full Carbon Aero special dimension seatpost, 20mm offset, length: 280mm-47cm, 300mm-50/53cm, 350mm-55/59cm
SADDLE	Velomann Mitora139 Lite, open flow, carbon rails 7x9,3mm, carbon-reinforced nylon, Wide: 139mm, Lenght: 250mm

SPECIALISSIMA PRO | ULTEGRA DI2 12SP | YUB45



The image shown is indicative only. Components and graphic detail may differ from actual model. Bianchi reserves the right to amend specifications and/or prices.

COLOR	MW - Carbon/Ckmetallic/CK16 MV - Carbon/Graphite irid/Black
FRAME	Specialissima PRO carbon HM with Bianchi CV System, only electronic groupsets, fully internal cable routing, headset Acros ICR, direct mount brakes, BB-PressFit 86,5x41 sizes 47-50-53-55-57-59cm
HEADSET	Acros IS52 ICR SS custom headtube cover Specialissima
FORK	Specialissima PRO full Carbon HM with CV, aero, integrated head, disc, 1.5 head, 12x100mm thru axle
SHIFTER	Shimano Ultegra Di2 hydraulic disc brake for road, ST-R8170, BR-R8170, for 160mm rotor, resin pad
REAR DERAILLEUR	Shimano Ultegra Di2 12sp, RD-R8150
FRONT DERAILLEUR	Shimano, FD-R8150, Ultegra Di2, brazed-on type, down swing, top gear 50-54T, for rear 12-speed
CRANKSET	Shimano, Ultegra 12sp, FC-R8100, 4iiii precision 3+ power meter, for rear 12- speed, 52x36T, Crank Length: 170mm-47/53cm, 172.5mm-55/59cm
BOTTOM BRACKET	Shimano SM-BB72-41B, press fit for road
CHAIN	Shimano Ultegra 12 sp CN-M8100
CASSETTE / FREEWHEEL	Shimano Ultegra, CS-R8100,Ultegra 12sp, 11-12-13-14-15-16-17-19-21-24-27-30T

BRAKE	Shimano BR-R8170 Hydraulic disc brake included in the shifter
BRAKE LEVER	included
DISC ROTOR	Shimano RT-CL800 center lock type w/Ice Tech, 160mm front rear
RIM/WHEELSET	Velomann PALLADIUM, 33mm profile, 700x21c, 24h, HG11
TIRE	Pirelli P ZERO™ Race , 26-622, 127TPI
STEM	Reparto Corse integrated handlebar, material Carbon, for Acros ICR system drop 125mm, reach 80mm Ext: 90/380 (47-50cm) ; 100/400 (53cm) ; 110/400 (55-57cm); 120/420 (59cm)
HANDLEBAR	included in the stem
GRIP / TAPE	Velo Black soft Microfiber tapes
SEATPOST	Specialissima Full Carbon Aero special dimension seatpost, 20mm offset, length: 280mm-47cm, 300mm-50/53cm, 350mm-55/59cm
SADDLE	Velomann Mitora139 Hyper, open flow, carbon rails, carbon-reinforced nylon Large 139mm Lenght 250mm

SPECIALISSIMA PRO | FRAMEKIT | XTB08



The image shown is indicative only. Components and graphic detail may differ from actual model. Bianchi reserves the right to amend specifications and/or prices.

COLOR	MW - Carbon/CK16 Metallic/CK16 MV - Carbon/Graphite Irid./Black
FRAME	Specialissima PRO carbon HM with Bianchi CV, only electronic groupsets, fully internal cable routing, headset Acros ICR, direct mount brakes, BB-PressFit 86,5x41 sizes 47-50-53-55-57-59cm
HEADSET	Acros IS52 ICR
FORK	Specialissima PRO full Carbon HM with CV, aero, integrated head, disc, 1.5" head, 12x100mm thru axle
SEATPOST	Specialissima Full Carbon Aero special dimension seatpost, 20mm offset, length: 280mm-47cm, 300mm-50~53cm, 350mm-55~59cm

*Frame price does not include cockpit.

SPECIALISSIMA COMP | ULTEGRA DI2 12SP | YTB46



The image shown is indicative only. Components and graphic detail may differ from actual model. Bianchi reserves the right to amend specifications and/or prices.

COLOR	MQ - CK16/Graphite MF - Graphite/Black
FRAME	Specialissima COMP carbon, only electronic groupsets, fully internal cable routing, headset Acros ICR, direct mount brakes, BB-PressFit 86,5x41 sizes 47-50-53-55-57-59cm
HEADSET	Acros IS52 ICR: custom headtube cover Specialissima
FORK	Specialissima COMP full Carbon, aero, integrated head, disc, 1.5 head, 12x100mm thru axle
SHIFTER	Shimano Ultegra Di2 hydraulic disc brake for road, ST-R8170, BR-R8170, for 160mm rotor, resin pad
REAR DERAILLEUR	Shimano Ultegra Di2 12sp, RD-R8150
FRONT DERAILLEUR	Shimano, FD-R8150, Ultegra Di2, brazed-on type, down swing, top gear 50-54T, for rear 12-speed
CRANKSET	Shimano Ultegra 12sp, FC-R8100, 12- speed, 52/36T, Crank Length: 170mm-47/53cm, 172.5mm-55/59cm
BOTTOM BRACKET	Shimano SM-BB72-41B, press fit for road
CHAIN	Shimano Ultegra 12sp CN-M8100
CASSETTE / FREEWHEEL	Shimano Ultegra, CS-R8100,Ultegra 12sp, 11-12-13-14-15-16-17-19-21-24-27-30T
BRAKE	Shimano BR-R8170 Hydraulic disc brake included in the shifter

BRAKE LEVER	included
DISC ROTOR	Shimano RT-CL800 center lock type w/Ice Tech, 160mm front rear
RIM/WHEELSET	Velomann PALLADIUM, 33mm profile, 700x21c, 24h, HG11
TIRE	Vittoria Rubino V 28-622 TLR full black G2.0, graphene + silica, 100TPI,
STEM	Velomann, AL6061, fully internal cable routing stem, compatible with Acros AICR system, Ext: 90mm (47), 100mm(50/53), 110mm(55/57), 120mm(59)
HANDLEBAR	Velomann Aero Compact handlebar, alloy diam. 31,8mm, reach 74mm, drop 116mm, Size: 400mm-47/53cm, 420mm-55/59cm
GRIP / TAPE	Bianchi Arrow premium tape, 2.5mm thickness, black
SEATPOST	Specialissima Full Carbon Aero special dimension seatpost, 20mm offset, length: 280mm-47cm, 300mm-50/53cm, 350mm-55/59cm
SADDLE	Velomann Mitora139, open flow, AISI rails, carbon-reinforced nylon Large 139mm Lenght 250mm

SPECIALISSIMA COMP | RIVAL ETAP AXS 12SP | YTB48



The image shown is indicative only. Components and graphic detail may differ from actual model. Bianchi reserves the right to amend specifications and/or prices.

COLOR	MQ - CK16/Graphite MF - Graphite/Black
FRAME	Specialissima COMP carbon, only electronic groupsets, fully internal cable routing, headset Acros ICR, direct mount brakes, BB-PressFit 86,5x41 sizes 47-50-53-55-57-59cm
HEADSET	Acros IS52 ICR: custom headtube cover Specialissima
FORK	Specialissima COMP full Carbon, aero, integrated head, disc, 1.5 head, 12x100mm thru axle
SHIFTER	Sram RIVAL ETAP AXS D1 Hydraulic Disc Brake, Stealth-a-majig disconnected, 20mm Flat Mount
REAR DERAILLEUR	Sram RIVAL ETAP AXS D1 MAX 36T
FRONT DERAILLEUR	Sram RIVAL ETAP AXS D1 BRAZE
CRANKSET	Sram RIVAL D1 DUB, 48/35T, Crank Length: 170mm-47/53cm, 172.5mm-55/59cm
BOTTOM BRACKET	Sram Press fit Road 86,5x41
CHAIN	Sram RIVAL D1 12sp
CASSETTE / FREEWHEEL	CS XG 1250 D1 10-36T

BRAKE	included in the shifter
DISC ROTOR	Sram Paceline X, centerlock, 160mm front and rear
RIM/WHEELSET	Velomann PALLADIUM, 33mm profile, 700x21c, 24h, XDR body
TIRE	Vittoria Rubino V 28-622 TLR full black G2.0, graphene + silica, 100TPI,
STEM	Velomann, AL6061, fully internal cable routing stem, compatible with Acros AICR system, Ext: 90mm (47), 100mm(50/53), 110mm(55/57), 120mm(59)
HANDLEBAR	Velomann Aero Compact handlebar, alloy diam. 31,8mm, reach 74mm, drop 116mm, Size: 400mm-47/53cm, 420mm-55/59cm
GRIP / TAPE	Bianchi Arrow premium tape, 2.5mm thickness, black
SEATPOST	Specialissima Full Carbon Aero special dimension seatpost, 20mm offset, length: 280mm-47cm, 300mm-50/53cm, 350mm-55/59cm
SADDLE	Velomann Mitora139, open flow, AISI rails, carbon-reinforced nylon Large 139mm Lenght 250mm

SPECIALISSIMA COMP | 105 DI2 12SP | YTB47



The image shown is indicative only. Components and graphic detail may differ from actual model. Bianchi reserves the right to amend specifications and/or prices.

COLOR	MQ - CK16/Graphite MF - Graphite/Black
FRAME	Specialissima COMP carbon, only electronic groupsets, fully internal cable routing, headset Acros ICR, direct mount brakes, BB-PressFit 86,5x41 sizes 47-50-53-55-57-59cm
HEADSET	Acros IS52 ICR: custom headtube cover Specialissima
FORK	Specialissima COMP full Carbon, aero, integrated head, disc, 1.5 head, 12x100mm thru axle
SHIFTER	Shimano 105 Di2 hydraulic disc brake for road, ST-R7170, BR-R7170, for 160mm rotor, resin pad
REAR DERAILLEUR	Shimano 105 Di2 12sp, RD-R7150
FRONT DERAILLEUR	Shimano, FD-R7150, 105 Di2, brazed-on type, down swing, top gear 50-52T, for rear 12-speed
CRANKSET	Shimano 105 12sp, FC-R7100, 12- speed, 50x34T, Crank Length: 170mm-47/53cm, 172.5mm-55/59cm
BOTTOM BRACKET	Shimano SM-BB72-41B, press fit for road
CHAIN	Shimano 105 12sp CN-M7100
CASSETTE / FREEWHEEL	Shimano, CS-R7100, 105, 12-SPEED,11-12-13-14-15-17-19-21-24-27-30-34T
BRAKE	Shimano BR-R8170 Hydraulic disc brake included in the shifter

BRAKE LEVER	included
DISC ROTOR	Shimano SM-RT70 rotor for disc brake center lock , with Ice Technology, S 160mm
RIM/WHEELSET	Velomann PALLADIUM, 33mm profile, 700x21c, 24h, HG11
TIRE	Vittoria Rubino V 28-622 TLR full black G2.0, graphene + silica, 100TPI,
STEM	Velomann, AL6061, fully internal cable routing stem, compatible with Acros AICR system, Ext: 90mm (47), 100mm(50/53), 110mm(55/57), 120mm(59)
HANDLEBAR	Velomann Aero Compact handlebar, alloy diam. 31,8mm, reach 74mm, drop 116mm, Size: 400mm-47/53cm, 420mm-55/59cm
GRIP / TAPE	Bianchi Arrow premium tape, 2.5mm thickness, black
SEATPOST	Specialissima Full Carbon Aero special dimension seatpost, 20mm offset, length: 280mm-47cm, 300mm-50/53cm, 350mm-55/59cm
SADDLE	Velomann Mitora139, open flow, AISI rails, carbon-reinforced nylon Large 139mm Lenght 250mm

SPRINT

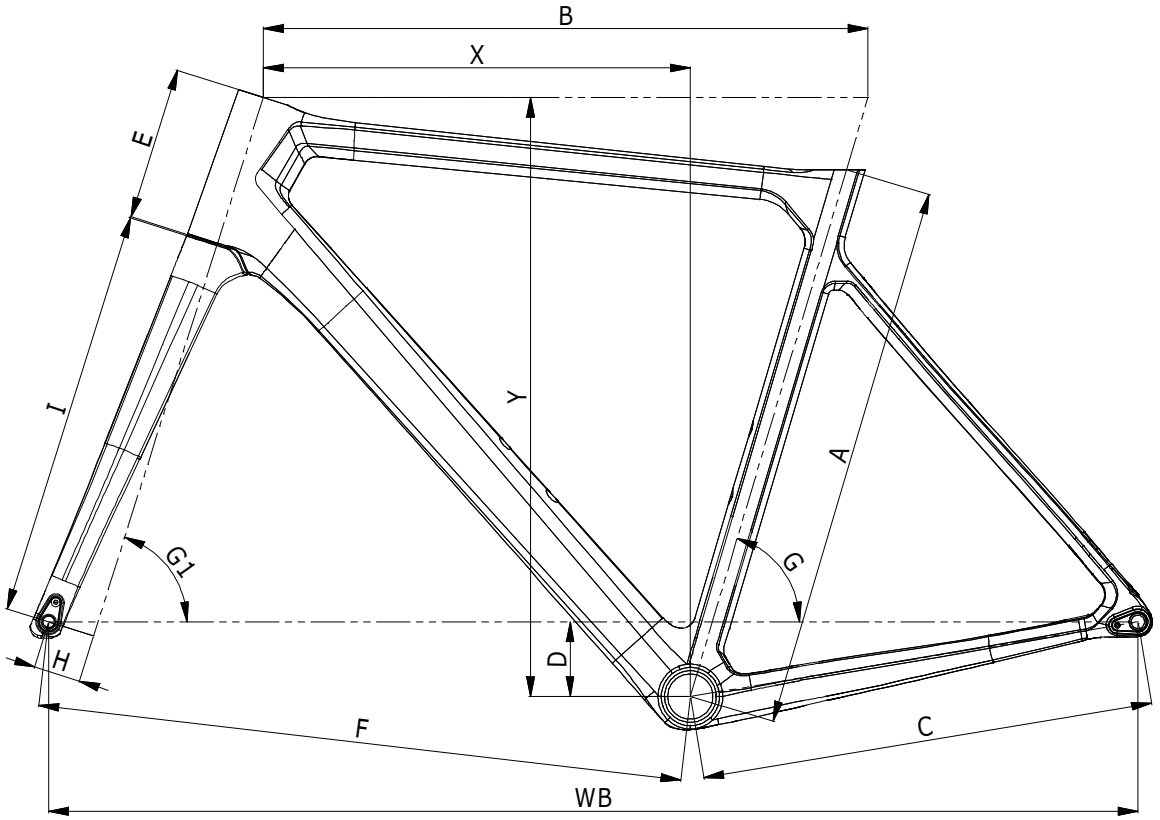

Sprint ICR													
SIZE	A	B	C	D	E	F	G	G1	H	I	X	Y	WB
470	420	515	410	60	105	580	74.5°	70.5°	43	373	377	497	982
500	450	525	410	60	110	582	74.5°	71.5°	43	373	383	505	983
530	480	535	410	68	125	583	74°	72°	43	373	384	529	984
550	500	550	413	68	140	588	73.5°	73°	43	373	388	545	991
570	520	560	413	68	155	593	73.5°	73°	43	373	393	561	996
590	540	575	413	68	175	603	73°	73°	43	373	396	580	1006
610	560	585	415	68	195	607	72.5°	73°	43	373	397	599	1012

SPRINT | 105 DI2 12SP | YTBR6



The image shown is indicative only. Components and graphic detail may differ from actual model. Bianchi reserves the right to amend specifications and/or prices.

COLOR	SX - CK16 / Black - Full Glossy SZ - Light grey / Iridescent - Full Glossy
FRAME	Sprint carbon monocoque, mechanical/electronic shifting compatible, BB-PressFit 86,5x41, head tube 12/4-1.5, integrated seat clamp, disc brake flat mount, thru axle 12x142 sizes 47-50-53-55-57-59-61cm
SEATPOST CLAMP	included in the frame
HEADSET	ACROS & FSA, for internal cable routing
FORK	Full Carbon Aero Road 1.4>1.5 integrated head, disc brake flat mount, thru axle 12x100
SHIFTER	Shimano 105 Di2 hydraulic disc brake for road, ST-R7170, BR-R7170, for 160mm rotor
REAR DERAILLEUR	Shimano 105 Di2, RD-R7150 12-speed
FRONT DERAILLEUR	Shimano 105 Di2, FD-R7150 12-speed
CRANKSET	Shimano 105 12sp, FC-R7100, 50/34Tfor rear 12- speed, Crank Length: 170mm-47/53cm, 172.5mm-55/59cm, 175mm-61cm
BOTTOM BRACKET	Token Ninja Lite BB4124PS, for 24mm spindle, threaded design
CHAIN	Shimano 12sp, CN-M7100
CASSETTE / FREEWHEEL	Shimano, 105 12sp, CS-R7100, 11-12-13-14-15-17-19-21-24-27-30-34T
BRAKE	Shimano, BR-R7170 Hydraulic disc brake, included in the shifter

DISC ROTOR	Shimano rotor for disc brake center lock, SM-RT70, 160mm
RIM/WHEELSET	Velomann V30R, alloy, 23mm channel, 30mm profile. 2 to 1 spoke pattern, j-bend spokes, black, HG11 body, weight : 1790g
TIRE	Vittoria Rubino V 28-622 TLR full black G2.0, graphene + silica, 100TPI,
STEM	Velomann, Alloy 6061, raise - 7° Ext: 90mm-47/50cm, 100mm-53cm, 110mm-55/57cm, 120mm-59/61cm
HANDLEBAR	Velomann Compact, alloy 6061, diam. 31,8mm, reach 80mm, drop 130mm Size: 400mm-47/53cm,420mm-55/59cm, 440mm-61cm
GRIP / TAPE	Bianchi Hexagon tape, 2.5mm thickness, black
SEATPOST	Velomann carbon, 15mm offset, 27.2mm, 350mm
SADDLE	Velomann Mitora139.1 saddle, 250x139mm, steel rail

SPRINT | 105 12SP | YTBR5



The image shown is indicative only. Components and graphic detail may differ from actual model. Bianchi reserves the right to amend specifications and/or prices.

COLOR	SX - CK16 / Black - Full Glossy SZ - Light grey / Iridescent - Full Glossy
FRAME	Sprint carbon monocoque, mechanical/electronic shifting compatible, BB-PressFit 86,5x41, head tube 11.4-1.5, integrated seat clamp, disc brake flat mount, thru axle 12x142 sizes 47-50-53-55-57-59-61cm
SEATPOST CLAMP	included in the frame
HEADSET	ACROS & FSA, for internal cable routing
FORK	Full Carbon Aero Road 1.4>1.5 integrated head , disc brake flat mount, thru axle 12x100
SHIFTER	Shimano 105 hydraulic disc brake for road, ST-R7120, BR-R7170, for 160mm rotor
REAR DERAILLEUR	Shimano 105 12sp, RD-R7100
FRONT DERAILLEUR	Shimano 105 12sp, FD-R7100
CRANKSET	Shimano 105 12sp, FC-R7100, 50/34Tfor rear 12- speed, Crank Length: 170mm-47/53cm, 172.5mm-55/59cm, 175mm-61cm
BOTTOM BRACKET	Token Ninja Lite BB4124PS, for 24mm spindle, threaded design
CHAIN	Shimano CN-M6100, 12sp
CASSETTE / FREEWHEEL	Shimano, 105 12sp, CS-R7100, 11-12-13-14-15-17-19-21-24-27-30-34T

BRAKE	Shimano, Hydraulic disc brake, included in the shifter
BRAKE LEVER	included
DISC ROTOR	Shimano rotor for disc brake center lock, SM-RT70, 160mm
RIM/WHEELSET	Velomann V30R, alloy, 23mm channel, 30mm profile. 2 to 1 spoke pattern, j-bend spokes, black, HG11 body, weight : 1790g
TIRE	Vittoria Rubino V 28-622 TLR full black G2.0, graphene + silica, 100TPI,
STEM	Velomann, Alloy 6061, raise - 7° Ext: 90mm-47/50cm, 100mm-53cm, 110mm-55/57cm, 120mm-59/61cm
HANDLEBAR	Velomann Compact, alloy 6061, diam. 31,8mm, reach 80mm, drop 130mm Size: 400mm-47/53cm,420mm-55/59cm, 440mm-61cm
GRIP / TAPE	Bianchi Hexagon tape, 2.5mm thickness, black
SEATPOST	Velomann carbon, 15mm offset, 27.2mm, 350mm
SADDLE	Velomann Mitora139.1 saddle, 250x139mm, steel rail

ENDURANCE

INFINITO

INFINITO XE

INFINITO | RIVAL ETAP AXS 12SP | YSB50



The image shown is indicative only. Components and graphic detail may differ from actual model. Bianchi reserves the right to amend specifications and/or prices.

COLOR	IB_ soft black/black full matt
FRAME	INFINITO Carbon-CV, Disc Brake, Mechanical/Electronic Di2/EPS, TC19, compatible with 32" tire, BBset pressfit 86,5x41, rear dropout 12 x 142mm thru axle, sizes 53-55-57-59-61cm
BOLTS / HARDWARE	Bolts AL7075-T6 large button head Torx M5*14mm x 4pcs
SEATPOST CLAMP	included in the frame
HEADSET	FSA NO.42/47CF/ACB/5D, 1-1/8 ACB Top, 1.5" ACB Btm, Matt UD Carbon top cover H2042, stack height 11,8mm
FORK	Full Carbon-CV - 28"-300mm - 1,5" Disc Brake, flat mount, thru axle 12x100, compatible with 32" tire
SHIFTER	Sram RIVAL ETAP AXS D1 Hydraulic Disc Brake, front caliper, 20mm Flat Mount, 1000mm hose
REAR DERAILLEUR	Sram RIVAL ETAP AXS D1 MAX 36T
FRONT DERAILLEUR	Sram RIVAL ETAP AXS D1 BRAZE
BATTERY / MOUNT	Sram EP Powerpack 2 battery
CHARGER / PWR CABLE	Included in the battery
CRANKSET	Sram RIVAL D1 DUB 170 - 172,5 - 175, 46/33, Crank Length: 170mm-47/54cm, 172.5mm- 55/59cm, 175mm-61cm
BOTTOM BRACKET	Sram Press fit Road 86,5x41
CHAIN	Sram RIVAL D1 12S 116 LINK

CASSETTE / FREEWHEEL	Sram CS XG 1250 D1 10-36T
BRAKE	included in the shifter
DISC ROTOR	Sram Rotor centerlock centerline Road 160mm black rounded
RIM/WHEELSET	Fulcrum Racing 818 disc brake, Aluminium C19 2WF-R Tubeless ready 622x19c, height 34mm, 24 spokes steel ED black round, thru axle, center lock AFS, front HH12 - rear HH12/142
TIRE	Pirelli P7, 700 x 28c, 60TPI, Nylon breaker
STEM	Reparto Corse, 3D Forged alloy 6061, raise +/ - 7°, height 38mm, Oversize, 1 1/8", 1 piece alloy faceplate 6061, size 70-90-100-110-120mm, Ext: 70mm-47cm, 90mm-50cm, 100mm-53cm, 110mm-55cm, 120mm-57cm/61cm
HANDLEBAR	Reparto Corse Compact Flat Top, alloy 2014 diam. 31,8mm, reach 80mm, drop 130mm, Sizes: 40-42-44, Size: 400mm-47/50cm , 420mm-53/57cm, 440mm-59/61cm
GRIP / TAPE	Velo Black soft Microfiber tapes+EVA-139 Shockproof 200*3cm with 4 line hole Black/Celeste Velo Black soft Microfiber tapes+EVA-139 Shockproof 200*3cm with 4 line hole Black
SEATPOST	Reparto Corse Full Carbon special dimension; special Clamp type with alloy head adjustable and reversible +/- 35mm; lenght: 350mm-47 /57cm; 380mm-59/61cm
SADDLE	Fi'zi:k Argo Tempo R5 150mm black wing flex, rail S alloy

INFINITO | 105 DI2 | YSB52



The image shown is indicative only. Components and graphic detail may differ from actual model. Bianchi reserves the right to amend specifications and/or prices.

COLOR	IB - Soft Black / Black Full Matt IC - CK16 / Dark Turquoise Full Glossy
FRAME	INFINITO Carbon-CV, Disc Brake, Mechanical/ Electronic Di2/EPS, TC19, compatible with 32 tire, BBset pressfit 86,5x41, rear dropout 12 x 142mm thru axle, sizes 47-50-53-55-57-59-61cm
SEATPOST CLAMP	included in the frame
HEADSET	FSA NO.42/47CF/ACB/5D, 1-1/8 ACB Top, 1.5 ACB Btm
FORK	Full Carbon-CV - 28-300mm - 1,5 Disc Brake, flat mount, thru axle 12x100, compatible with 32 tire
SHIFTER	Shimano 105 hydraulic disc brake for road
REAR DERAILLEUR	Shimano 105 Di2, RD-R7150, W/TL-EW300
FRONT DERAILLEUR	Shimano 105 Di2, FD-R7150, top gear 50-52T
CRANKSET	Shimano 105 Di2, FC-R7100, Ultegra hollowtech 2, 170-172,5-175mm, 50x34T, crank lenght: 170mm-47/53cm, 172.5mm-55/59cm, 175-61cm
BOTTOM BRACKET	Shimano SM-BB72-41B, press fit for road
CHAIN	Shimano 105 Di2, CN-M7100, 112link, w/quick link
CASSETTE / FREEWHEEL	Shimano 105 Di2, 11-34T
BRAKE	Shimano BR-R7170 Hydraulic disc brake, included in the shifter

BRAKE LEVER	included
DISC ROTOR	Shimano SM-RT70 rotor for disc brake center lock, S 160mm w/lock ring (2pcs)
RIM/WHEELSET	Vision Trimax 30 disc brake 700X19c, Hubs SC ,clincher, front 12X100 - rear 12X142 HG
TIRE	Pirelli P7, 700 x 28c, 60TPI
STEM	Reparto Corse, 3D Forged alloy 6061, raise +/ - 7°, height 38mm, Oversize, 1 1/8, 1 piece alloy faceplate 6061, size 70-90-100-110-120mm, Ext: 70mm-47cm, 90mm-50cm, 100mm-53cm, 110mm-55cm, 120mm-57cm/61cm
HANDLEBAR	Reparto Corse Compact Flat Top, alloy 2014 diam. 31,8mm, reach 80mm, drop 130mm, Sizes: 40-42-44, Size: 400mm-47/50cm , 420mm-53/57cm, 440mm-59/61cm
GRIP / TAPE	Velo Black soft Microfiber tapes+EVA-139 Shockproof 200*3cm with 4 line hole Black/Celeste color and VLP-56 BK plug
SEATPOST	Reparto Corse Full Carbon special dimension; lenght: 350mm-47 /57cm; 380mm-59/61cm
SADDLE	Fi'zi:k Argo Tempo R5 150mm black wing flex, rail S alloy

INFINITO | ULTEGRA DI2 | YTB4D



The image shown is indicative only. Components and graphic detail may differ from actual model. Bianchi reserves the right to amend specifications and/or prices.

COLOR	2K: CK16 celeste glossy / black decals 2M: Purple black - glossy/ black - matt decals
FRAME	INFINITO carbon ICR - 1.5"- 1.5", Disc Brake, Mechanical/Electronic Di2, compatible with 32" tire, BBset pressfit 86,5x41, rear dropout 12 x 142mm thru axle sizes 47-50-53-55-57-59-61cm
HEADSET	Acros/FSA for ICR cable routing
FORK	Full Carbon ICR - 28"- 300mm - 1.5" , dropout 12 x 100mm thru axle
SHIFTER	Ultegra Di2 hydraulic disc brake for road ST-R8170(L), ST-R8170 (R)
REAR DERAILLEUR	Ultegra Di2 12sp RD-R8150, 12-speed, max 34T
FRONT DERAILLEUR	Ultegra Di2 12sp FD-R8150, Ultegra Di2, brazed-on type
CRANKSET	Ultegra 12sp FC-R8100, hollowtech 2, for rear 12- speed, 170-172,5-175mm, 50x34T Crank Length:170mm-47~54cm, 172.5mm-55~59cm, 175mm-61cm
BOTTOM BRACKET	Shimano KSMBB7241B pressfit
CHAIN	Shimano CN-M8100, 12- speed

CASSETTE / FREEWHEEL	Ultegra 12sp 11-34T CS-R8100,Ultegra 12sp, 11-12-13-14-15-17-19-21-24-27-30-34T
BRAKE	Shimano BR-R8170 Hydraulic disc brake included in the shifter
DISC ROTOR	Shimano RT-CL800, 160mm front rear
RIM/WHEELSET	Velomann Palladium, 33mm profile, 700x21c, 24h, HG11 body, spoke pattern 2 to 1, tubeless-ready, set 1450 gr, sealed cartridge bearings
TIRE	Pirelli Cinturato™ Velo TLR 32mm (622-32), ArmourTech
STEM	Velomann, AL6061, fully internal cable routing stem, compatible with Acros AICR system Ext: 90mm (47), 100mm(50/53), 110mm(55/57), 120mm(59/61)
HANDLEBAR	Velomann Aero Compact handlebar full ICR, alloy diam. 31,8mm, reach 74mm, drop 116mm Size: 400mm-47~53cm, 420mm-55~57cm, 440-59"61cm
GRIP / TAPE	Bianchi Arrow premium tape, 2.5mm thickness, full black
SEATPOST	Velomann, custom D-shape, alloy shaft 2014, head alloy 6061, Setback 25mm L350mm =47›57cm; L380mm= 59›61cm
SADDLE	Velomann Mitora Lite 139 saddle, 139x250mm carbon rail 7x9,1mm

INFINITO | 105 12SP | YTB5D



The image shown is indicative only. Components and graphic detail may differ from actual model. Bianchi reserves the right to amend specifications and/or prices.

COLOR	2K: CK16 celeste glossy / black decals 2M: Purple black - glossy/ black - matt decals
FRAME	INFINITO carbon ICR - 1.5"- 1.5", Disc Brake, Mechanical/Electronic Di2, compatible with 32" tire, BBset pressfit 86,5x41, rear dropout 12 x 142mm thru axle sizes 47-50-53-55-57-59-61cm
HEADSET	Acros/FSA for ICR cable routing
FORK	Full Carbon ICR - 28"- 300mm - 1.5" , dropout 12 x 100mm thru axle
SHIFTER	105 hydraulic disc brake for road ST-R7120(L), ST-R7120 (R)
REAR DERAILLEUR	Shimano 105 12sp RD-R7100, 105 12-speed, max 36T
FRONT DERAILLEUR	Shimano 105 12sp FD-R7100, brazed-on type
CRANKSET	105 12sp FC-R7100, hollowtech 2, for rear 12- speed, 170-172,5-175mm, 50x34T Crank Length: 170mm-47~53cm, 172.5mm-55~59cm, 175-61cm
BOTTOM BRACKET	Shimano KSMBB7241B pressfit
CHAIN	Shimano CN-M6100, 12-speed

CASSETTE / FREEWHEEL	105 12sp 11-34T CS-R7100, 12-SPEED,11-12-13-14-15-17-19-21-24-27-30-34T
BRAKE	Shimano BR-R7170 Hydraulic disc brake included in the shifter
DISC ROTOR	Shimano RT-CL800, 160mm front rear
RIM/WHEELSET	Velomann Palladium, 33mm profile, 700x21c, 24h, HG11 body, spoke pattern 2 to 1, tubeless-ready, set 1450 gr, sealed cartridge bearings
TIRE	Pirelli Cinturato™ Velo TLR 32mm (622-32), ArmourTech
STEM	Velomann Viper, Alloy 6061, raise - 7°, Oversize, 1 1/8" Ext: 90mm-47cm, 100mm-50'53cm, 110mm-55~57cm, 120mm-59~61cm
HANDLEBAR	Velomann Compact, Flat Top, alloy 6061 diam. 31,8mm, reach 80mm, drop 130mm Size: 400mm-47~53cm,420mm-55~57cm, 440mm-59"61cm
GRIP / TAPE	Bianchi Hexagon tape, 2.5mm thickness, full black
SEATPOST	Velomann, custom D-shape, alloy shaft 2014, head alloy 6061, Setback 25mm L350mm =47›57cm; L380mm= 59›61cm
SADDLE	Velomann Mitora139, 139x250mm rail in Aisi

INFINITO | 105 12SP | YTB7D



The image shown is indicative only. Components and graphic detail may differ from actual model. Bianchi reserves the right to amend specifications and/or prices.

COLOR	2K: CK16 celeste glossy / black decals 2M: Purple black - glossy/ black - matt decals
FRAME	INFINITO carbon ICR - 1.5"- 1.5", Disc Brake, Mechanical/Electronic Di2, compatible with 32" tire, BBset pressfit 86,5x41, rear dropout 12 x 142mm thru axle sizes 47-50-53-55-57-59-61cm
HEADSET	Acros/FSA for ICR cable routing
FORK	Full Carbon ICR - 28"- 300mm - 1.5" , dropout 12 x 100mm thru axle
SHIFTER	105 hydraulic disc brake for road ST-R7120(L), ST-R7120 (R)
REAR DERAILLEUR	Shimano 105 12sp RD-R7100, 105 12-speed, max 36T
FRONT DERAILLEUR	Shimano 105 12sp FD-R7100, brazed-on type
CRANKSET	105 12sp FC-R7100, hollowtech 2, for rear 12- speed, 170-172,5-175mm, 50x34T Crank Length: 170mm-47~53cm, 172.5mm-55~59cm, 175-61cm
BOTTOM BRACKET	Shimano KSMBB7241B pressfit
CHAIN	Shimano CN-M6100, 12-speed

CASSETTE / FREEWHEEL	105 12sp 11-34T CS-R7100, 12-SPEED,11-12-13-14-15-17-19-21-24-27-30-34T
BRAKE	Shimano BR-R7170 Hydraulic disc brake included in the shifter
DISC ROTOR	Shimano SM-RT70, 160mm front rear
RIM/WHEELSET	Velomann alloy, disc brake, rim profile 30mm, hub TC j-bend, round spokes 2mm black, clincher 622x19C,w\tape, front HH12 - rear HH12/142
TIRE	Pirelli P7 Sport 32mm (622-32), TechBelt, 60tpi
STEM	Velomann Viper, Alloy 6061, raise - 7°, Oversize, 1 1/8" Ext: 90mm-47cm, 100mm-50'53cm, 110mm-55~57cm, 120mm-59~61cm
HANDLEBAR	Velomann Compact, Flat Top, alloy 6061 diam. 31,8mm, reach 80mm, drop 130mm Size: 400mm-47~53cm,420mm-55~57cm, 440mm-59"61cm
GRIP / TAPE	Bianchi Hexagon tape, 2.5mm thickness, full black
SEATPOST	Velomann, custom D-shape, alloy shaft 2014, head alloy 6061, Setback 25mm L350mm =47>57cm; L380mm= 59>61cm
SADDLE	Velomann Mitora139, 139x250mm rail in Aisi

VIA NIRONE 7 | 105 11SP | YSB4C



The image shown is indicative only. Components and graphic detail may differ from actual model. Bianchi reserves the right to amend specifications and/or prices.

COLOR	ND: CK16/Titanium Silver Full Glossy N2: Serial Black/Titanium Silver Full Glossy
FRAME	Via Nirone 7 Allroad alloy hydroforming tubing, internal cable, seatpost diam 31.6mm, Flat Mount disc brake, thru axle 12x142mm, compatible with 40mm tire, rack & fender ready, downtube underside bottlecage ready, sizes 47-50-53-55-57-59-61-63cm
SEATPOST CLAMP	MX-112C Aluminium clamp, diam. 35mm
HEADSET	Fsa NO.8B/ZS4D 1.1/8" semi-integrated lower part + integrated upper part, w/15mm Top cover for 46mm/50 OD head tube
FORK	Bianchi Carbon Disc, 1.1/8", flat Mount caliper, thru axle 12x100mm
SHIFTER	Shimano 105 ST-R7020 2x11sp, Hydraulic disc brake, Shimano 105 ST-R7025 2x11sp smaller lever size for sizes 47/53cm
REAR DERAILLEUR	Shimano 105 RD-R7000 GS 11sp, top normalshadow design, direct attachment
FRONT DERAILLEUR	Shimano FD-R7000-L, 105, for rear 11sp, down-swing, brazed-on type, 61-66°, for top gear:46-53T, CL :43.5mm, Clamp band adapter, SM-AD91, L-size(34.9mm)
CRANKSET	Shimano FC-RS510 50x34T, Crank Length: 170mm-44/53cm, 172.5mm-55/59cm, 175mm-60/63cm
BOTTOM BRACKET	Shimano SM-BBR60
CHAIN	Kmc X11-1 EPT, 11sp, EPT finish
CASSETTE / FREEWHEEL	Shimano CS-HG7000 11, 11-13-15-17-19-21-23-25-27-30-34T

BRAKE	Shimano BR-RX400, hydraulic disc brake, flat mount calipers
BRAKE LEVER	included w/shifters
DISC ROTOR	Shimano SM-RT64, Center Lock, 160mm
FRONT HUB	Formula CL-712 road disc, alloy 32h, 2 sealed bearings, J-bend, Center Lock, thru axle 12x100mm
REAR HUB	Formula RXC-142S road disc, 4 sealed bearings, Center Lock, J-bend, thru axle 12x142mm
RIM/WHEELSET	Velomann disc 700c 622-21, profile 24mm, sleeve join, 32hole, tubeless ready, no eyelet
TIRE	Vittoria Zaffiro V 32-622 rigid full black, 700x32c, Nylon 26 TPI
STEM	Velomann Alloy 6061, raise +/ - 7°, height 38mm, Oversize, 1.1/8", Ext: 70mm-47cm, 90mm-50/53cm, 100mm-55cm, 110mm-57/59cm, 120mm-61/63cm
HANDLEBAR	Velomann Compact, Flat Top, alloy 6061 diam. 31,8mm, reach 80mm, drop 130mm, Size: 400mm-44/53cm, 420mm-55/59cm, 440mm-61/63cm
GRIP / TAPE	Cork w/Bianchi logo
SEATPOST	Velomann SP02.1 Alloy shaft AL6061, alloy head, 15mm offset, 31,6mm, length: 350mm-47/63cm
SADDLE	Velomann 2302HRN, hole, steel rail, cover PU soft touch, lenght/wide 280x145mm

VIA NIRONE 7 | 105 11SP | YSBW7



The image shown is indicative only. Components and graphic detail may differ from actual model. Bianchi reserves the right to amend specifications and/or prices.

COLOR	ND: CK16/Titanium Silver N2: Black/Titanium Silver
FRAME	VIA NIRONE 7 alu TC18, hydroforming tubing, internal cable, seat post: 31.6mm sizes 44-46-50-53-55-57-59-61-63cm
BOLTS / HARDWARE	M5 x 12mm stainless black M5*P0.8*12mm +CM233-1B
SEATPOST CLAMP	Aluminium clamp, light weight, 35mm anti-crimp
HEADSET	FSA 1.1/8" semi-integrated lower part + integrated upper part, w/H2166B 15mm Top cover tapered 46mm/50 OD head tube
FORK	Carbon Alu with Kevlar in front leg - 1.1/8 300mm
SHIFTER	Shimano 105, 2x11sp
REAR DERAILLEUR	Shimano 105 11sp
FRONT DERAILLEUR	Shimano 105 11sp, down-swing, 34.9mm band type, CS-angle:61-66, for top gear:46-53T, CL: 43.5mm
CRANKSET	Shimano 11-speed, 2-pcs FC, 50x34T Crank Length: 170mm-44/54cm, 172.5mm-55/59cm, 175mm-60/63cm
BOTTOM BRACKET	included in the crankset
CHAIN	KMC X11-1 EPT, 11sp

CASSETTE / FREEWHEEL	Shimano 105 11sp, 11-12-13-14-16-18-20-22-25- 28-32T
BRAKE	Shimano BR-R561-L, 27mm sunken nut, 27.5mm pivot bolt, rear CS49, 10.5mm sunken nut, 12.8mm pivot bolt
BRAKE LEVER	included
RIM/WHEELSET	Shimano F:20h/R:24h, for 11/10 speed, OLD:100/130R-QR:163mm
TIRE	Vittoria Zaffiro 25-622, 700 x 25cc, 26TPI
STEM	Velomann, Alloy 6061, raise +/ - 7°, height 38mm, Oversize, 1.1/8", Ext: 70mm-44/46cm, 90mm-50/53cm, 100mm-55cm, 110mm- 57/59cm, 120mm-61/63cm
HANDLEBAR	Velomann Compact, Flat Top, alloy 6061 diam. 31,8mm, reach 80mm, drop 130mm, Size: 400mm-44/53cm, 420mm-55/59cm, 440mm-61/63cm
GRIP / TAPE	Velo w/Bianchi embossed logo; w/VLT-49 CP end plug color: Black
SEATPOST	Velomann Alloy shaft AL6061, alloy head, 15mm offset, 31,6mm, Length: 300mm-44/46, 350mm-50/63cm
SADDLE	Velomann , steel rail, cover PVC, lenght/wide 280x145mm

CYCLOCROSS

ZOLDER PRO

ZOLDER PRO | GRX 610 1X12SP | YUB51



The image shown is indicative only. Components and graphic detail may differ from actual model. Bianchi reserves the right to amend specifications and/or prices.

COLOR	YD: Celestial Reef / Glossy YE: Savanna Green / Glossy
FRAME	Zolder Pro carbon cyclocross disc brake flat mount, press fit 86.5x41 headset 1.5" - 11/8", thru axle 12x142 sizes 48-50-52-54-56-58-cm
SEATPOST CLAMP	MX-112C Aluminium clamp, light weight, 31,8mm anti-crimp, black
HEADSET	Fsa Orbit C-40-ACB ; NO.42/ACB, Sealed 1-1/8 ACB Top, 1.5" ACB Btm ; Standard 15mm top cover alloy
FORK	Full carbon 1.5" - 11/8", disc brake flat mount, 1.5" - 11/8", thru axle 12x100
SHIFTER	Shimano GRX 610 12sp Hydraulic disc brake
REAR DERAILLEUR	Shimano GRX 820, 12 speed
CRANKSET	Shimano GRX 610 12sp FC-RX610-1, GRX, 12-speed, 2-pcs FC, 170-172.5-175mm, 40T Crank Length: 170mm-48/52, 172.5mm-54/58
BOTTOM BRACKET	Token Ninja Lite BB4124PS, for 24mm spindle, with premium bearings, threaded design
CHAIN	Shimano CN-M6100,12 speed
CASSETTE / FREEWHEEL	Shimano 105 12sp 11-34T 11-12-13-14-15-17-19-21-24-27-30-34T

BRAKE	Shimano BR-RX410 flat mount hydraulic disc brake included in the shifter
BRAKE LEVER	included
DISC ROTOR	Shimano SM-RT70 rotor for disc brake center lock , with Ice Technology, S 160mm
RIM/WHEELSET	Velomann V30R, alloy, 23mm channel, 30mm profile. 2 to 1 spoke pattern, j-bend spokes, black, HG11 boby, weight : 1790g
TIRE	Vittoria Terreno Mix 33-622/700x33c G2.0, nylon 120TPI, TLR reinforced, color black/black antracite
STEM	Velomann ST199A.2 3D Forged alloy 2014, raise - 8°, height 38mm, Oversize, 1 1/8", sandblast matt finish Ext: 90mm-48-50cm,100mm-52~54cm,110mm-56cm,120mm-58cm
HANDLEBAR	Velomann RA35A Compact, Flat Top, alloy 6061 diam. 31,8mm, reach 80mm, drop 130mm, Size: 400mm- 48~50cm; 420mm-52~58cm ,440mm-58cm
GRIP / TAPE	Bianchi Hexagon tape, 2.5mm thickness, full black
SEATPOST	Velomann SP67T.C carbon shaft UD finish, forged alloy head, 15mm offset L350mm, 27,2mm
SADDLE	Selle Italia Model X SuperFlow

ZOLDER PRO | ULTEGRA 2X12SP | YUB52



The image shown is indicative only. Components and graphic detail may differ from actual model. Bianchi reserves the right to amend specifications and/or prices.

COLOR	YD: Celestial Reef / Glossy YE: Savanna Green / Glossy
FRAME	Zolder Pro carbon cyclocross disc brake flat mount, press fit 86.5x41 headset 1.5" - 11/8", thru axle 12x142 sizes 48-50-52-54-56-58-cm
SEATPOST CLAMP	MX-112C Aluminium clamp, light weight, 31,8mm anti-crimp, black
HEADSET	Fsa Orbit C-40-ACB ; NO.42/ACB, Sealed 1-1/8 ACB Top, 1.5" ACB Btm ; Standard 15mm top cover alloy
FORK	Full carbon 1.5" - 11/8", disc brake flat mount, 1.5" - 11/8", thru axle 12x100
SHIFTER	Shimano Ultegra Di2 hydraulic disc brake for road
REAR DERAILLEUR	Ultegra Di2 12sp RD-R8150, Ultegra Di2 12-speed
FRONT DERAILLEUR	Shimano Ultegra Di2 12sp FD-R8150, Ultegra Di2, 12-speed
CRANKSET	Shimano Ultegra 12sp FC-R8100, hollowtech 2, for rear 12- speed, 170-172mm, 46x36T Crank Length: 170mm-48~54cm, 172.5mm-56~58cm
BOTTOM BRACKET	Token Ninja Lite BB4124PS, for 24mm spindle, with premium bearings, threaded design
CHAIN	Shimano CN-M6100,12 speed

CASSETTE / FREEWHEEL	Shimano 105 12sp 11-34T 11-12-13-14-15-17-19-21-24-27-30-34T
BRAKE	BR-R8170 Hydraulic disc brake included in the shifter
BRAKE LEVER	included
DISC ROTOR	Shimano RT-CL800 center lock type w/Ice Tech, 160mm front rear
RIM/WHEELSET	Velomann V30R, alloy, 23mm channel, 30mm profile. 2 to 1 spoke pattern, j-bend spokes, black, HG11 boby, weight : 1790g
TIRE	Vittoria Terreno Mix 33-622/700x33c G2.0, nylon 120TPI, TLR reinforced, color black/black antracite
STEM	Velomann ST199A.2 3D Forged alloy 2014, raise - 8°, height 38mm, Oversize, 1 1/8", sandblast matt finish Ext: 90mm-48-50cm,100mm-52~54cm,110mm-56cm,120mm-58cm
HANDLEBAR	Velomann RA35A Compact, Flat Top, alloy 6061 diam. 31,8mm, reach 80mm, drop 130mm, Size: 400mm- 48~50cm; 420mm-52~58cm ,440mm-58cm
GRIP / TAPE	Bianchi Hexagon tape, 2.5mm thickness, full black
SEATPOST	Velomann SP67T.C carbon shaft UD finish, forged alloy head, 15mm offset L350mm, 27,2mm
SADDLE	Selle Italia Model X SuperFlow

ZOLDER PRO | FRAMESET | XRB26



The image shown is indicative only. Components and graphic detail may differ from actual model. Bianchi reserves the right to amend specifications and/or prices.

COLOR	ZD: CK16/Purple Rainbow Z2: Black/Purple Rainbow
FRAME	ZOLDER Pro carbon cyclocross disc brake flat mount, FM-JM09- 2021, press fit 86.5x41 headset 1.5" - 11/8", thru axle 12x142 sizes 48-50-52-54-56-58-cm
SEATPOST CLAMP	MX-112C Aluminium clamp, light weight, 31,8mm anti-crimp

HEADSET	Fsa Orbit C-40-ACB ; NO.42/ACB, Sealed 1-1/8 ACB Top, 1.5" ACB Btm; Standard 15mm top cover alloy
FORK	Full carbon 1.5" - 11/8", FM-JM09 -2021 brake flat mount, 1.5" - 11/8", thru axle 12x100



GRAVEL

RACING | ADVENTURE

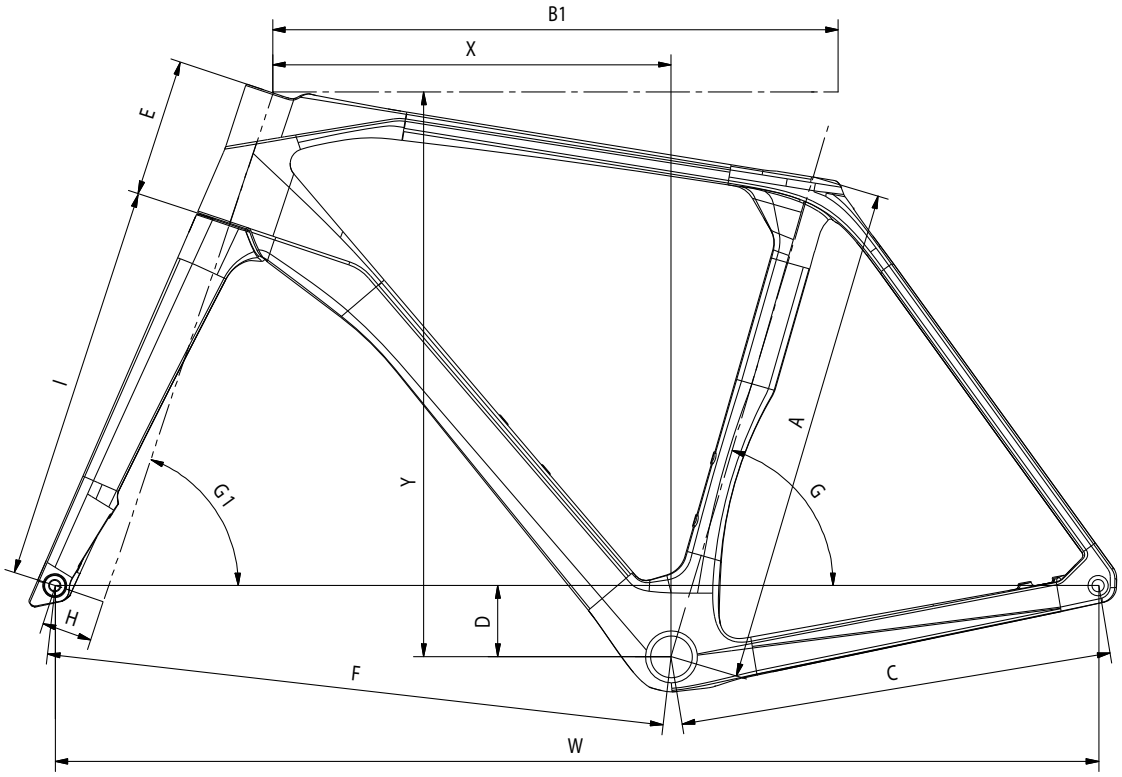

Impulso RC / Impulso PRO / Impulso COMP													
SIZE	A	B1	C	D	E	F	G	G1	H	I	X	Y	W
XS	410	515	425	70	100	592	75°	70,5°	50	391	376	517	1007
SM	450	526	425	70	118	600	74,5°	70,5°	50	391	378	534	1014
MD	490	550	425	70	135	610	74°	71,5°	50	391	391	554	1025
LG	520	572	426	70	162	628	73,5°	71,5°	50	391	401	580	1045
XL	550	600	428	70	190	645	73°	72°	50	391	414	608	1064

IMPULSO RC INTEGRATED HANDLEBAR

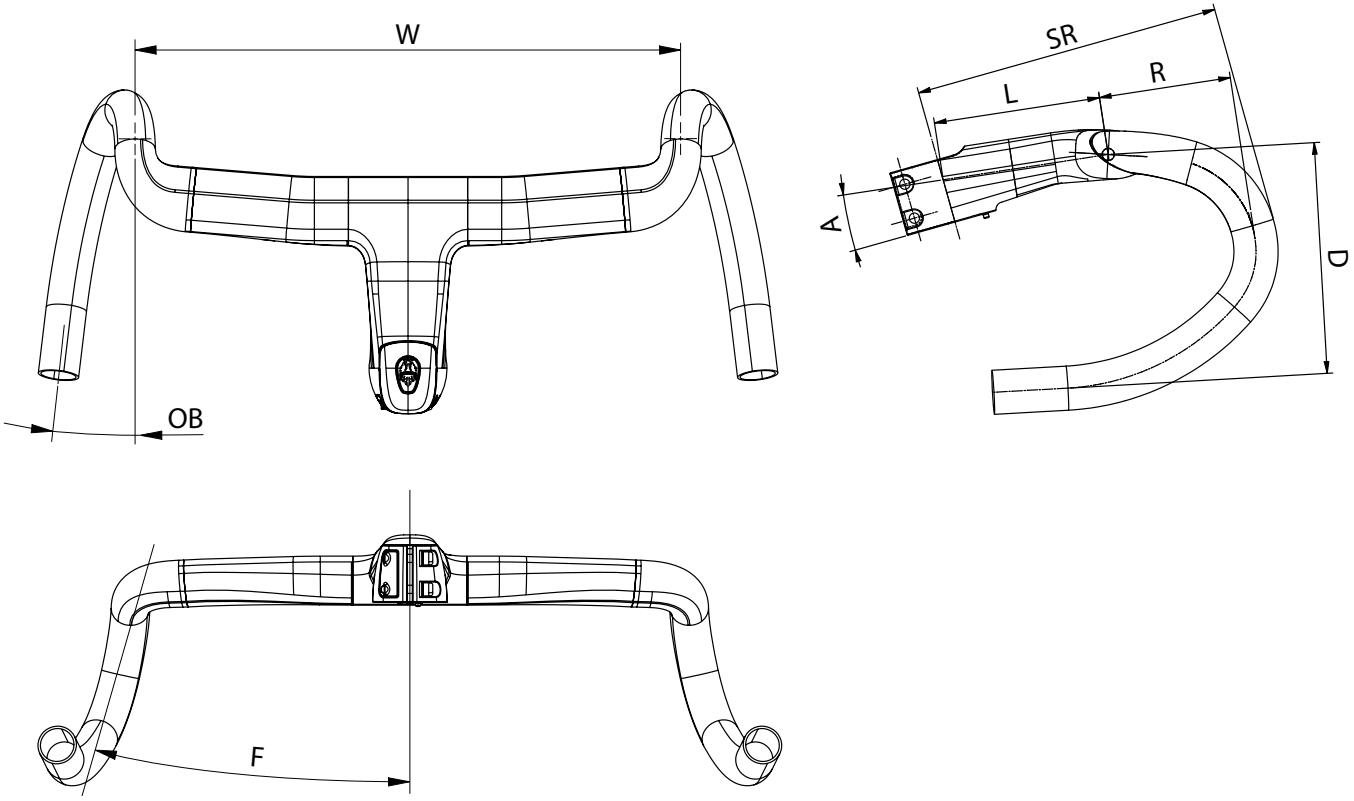

Impulso RC Integrated Handlebar								
Size	Width (W)	Lenght (L)	Reach (R)	Drop (D)	Stem/HB reach (SR)	Outward bend (OB)	Flare (F)	Angle (A)
90x400	400	90	72,6	119,3	167	6,8°	16°	-7°
90x420	420	90	72,6	119,3	167	6,8°	16°	-7°
100x400	400	100	72,6	119,3	177	6,8°	16°	-7°
100x420	420	100	72,6	119,3	177	6,8°	16°	-7°
110x400	400	110	72,6	119,3	187	6,8°	16°	-7°
110x420	420	110	72,6	119,3	187	6,8°	16°	-7°
110x440	440	110	72,6	119,3	187	6,8°	16°	-7°
120x420	420	120	72,6	119,3	197	6,8°	16°	-7°
120x440	440	120	72,6	119,3	197	6,8°	16°	-7°

IMPULSO RC | GRX 825 DI2 2X12SP | YUB81



The image shown is indicative only. Components and graphic detail may differ from actual model. Bianchi reserves the right to amend specifications and/or prices.

COLOR	FG - Celeste Metallic/graphite/CK16
FRAME	IMPULSO RC Disc Brake Specification: Flat Mount 140/160 Bottom Braket Standard: PressFit 86.5 X diam.41 Rear Axle: thru12 OLD (Over-Locknut-Dimension): 142 mm Max Chainring Compatibility: 46T-52T (Shimano) - 43T-48T (SRAM) Tire Clearance: ETRTO 622-42mm Material: HM-HS Carbon Fiber Composite
HEADSET	Bianchi Custom Acros ICR (Internal Cable Rounting)
FORK	Bianchi Impulso Integrated Fork Disc Brake Specification: Flat Mount 140/160 Front Axle: thru12 OLD (Over-Locknut-Dimension): 100 mm Tire Clearance: ETRTO 622-42mm Steer tube Diameter: 1 1/8"" Material: HM-HS Carbon Fiber Composite
SHIFTER	Shimano GRX, ST-RX825
FRONT DERAILLEUR	Shimano GRX FD-RX825
REAR DERAILLEUR	Shilmano GRX RD-RX825
CRANKSET	Shimano GRX 820 FC-RX820 48-31T. 4iiii Precision 3, single side powermeter. Crank Length: 170mm-XS(47)-SM(51), 172.5mm-MD(55)-LG(58), 175mm-XL(61)
BOTTOM BRACKET	Shimano SM-BB72-41B, press fit
CHAIN	Shimano CN-M7100

CASSETTE / FREEWHEEL	Shimano CS-HG710-12 speed, 11-36T Driver body Interface: HG11
BRAKE	Shimano Hydraulic Brake, BR-RX820
DISC ROTOR	Shimano RT-CL800 IceTech Hub Interface: Centerlock Rotor Diameter: 160 mm (front&Rear)
WHEELSET	Reparto Corse 43G Ceramitech
TIRE	Pirelli Cinturato Gravel RC, 700 x 40c, 60TPI- TLR, Folding, Tan sidewall
HANDLEBAR	Reparto Corse AeroFlare Flare: 16° Drop: 120mm Reach 80mm Steerer Interface Diameter: 1 1/8"" HandleBar Sizes: 90/400-SX(47) ; 100/400-SM(51); 110/420-MD(55)-LG(58); 120/440-XL(61) Material: HM-HS Carbon Fiber Composite
TAPE	Bianchi Arrow 2.5mm thickness, full black
SEATPOST	Bianchi Custom D-Shape Offset: 20mm Back Seatpost lengths: 300mm-SX(47), 350mm- SM(51) MD(55), 380mm-LG(58) XL(61) Material: HM-HS Carbon Fiber Composite
SADDLE	Bianchi RC139 carbon

IMPULSO PRO | GRX 820 DISC 2X12SP | YTB83



The image shown is indicative only. Components and graphic detail may differ from actual model. Bianchi reserves the right to amend specifications and/or prices.

COLOR	F1 - CK16/graphite matt F4 - grey/black matt
FRAME	IMPULSO PRO Disc Brake Specification: Flat Mount 140/160 Bottom Braket Standard: PressFit 86.5 X diam.41 Rear Axle: thru12 OLD (Over-Locknut-Dimension): 142 mm Front Derailleur: Brazed-on Type Rear Derailleur: SRAM UDH Hanger type Max Chainring Compatibility: 46T-52T (Shimano) - 43T-48T (SRAM) Tire Clearance: ETRTO 622-42mm Material: Carbon Fiber Composite
HEADSET	Bianchi Custom Acros ICR (Internal Cable Rounting)
FORK	Bianchi Impulso Integrated Fork Disc Brake Specification: Flat Mount 140/160 Front Axle: thru12 OLD (Over-Locknut-Dimension): 100 mm Tire Clearance: ETRTO 622-42mm Steer tube Diameter: 1 1/8 Material: Carbon Fiber Composite
SHIFTER	Shimano GRX 820 ST-RX820
FRONT DERAILLEUR	Shimano GRX 820 FD-RX820
REAR DERAILLEUR	Shimano GRX 820 RD-RX820 Maximum Cassette Sprocket 36T
CRANKSET	Shimano GRX 820 FC-RX820 48-31T Crank Length: 170mm-XS(47)-SM(51), 172.5mm-MD(55)-LG(58), 175mm-XL(61)
BOTTOM BRACKET	Shimano SM-BB72-41B, press fit
CHAIN	Shimano CN-M7100
CASSETTE / FREEWHEEL	Shimano CS-HG710-12 speed, 11-36T Driver body Interface: HG11

BRAKE	Shimano Hydraulic Brake, BR-RX820
DISC ROTOR	Shimano RT-CL800 IceTech Hub Interface: Centerlock Rotor Diameter: 160 mm (front&Rear)
WHEELSET	Velomann Terbium clincher and tubeless ready Rim Diameter: 700C Material: Carbon Rim Height: 30 mm Inner Wigth Channel: 25 mm
TIRE	Pirelli Cinturato™ GRAVEL H Classic, 40-622 tan sidewall
STEM	Velomann AICR Alloy Rise: -2° Steerer Diameter: 1-1/8 (28.6mm) HB interface Diameter: 1-1/4 (31.8mm) Stem Lengths: 80mm - XS(47), 90mm - SM(51), 100mm-MD(55), 110mm-LG(58),120m -XL(61)
HANDLEBAR	Velomann Gravel ICR Alloy Flare: 16° Drop: 130mm Reach 70mm Interface Diameter: 1 1/4 (31.8mm) HandleBar Widths: 400 - SX(47) SM(51), 420 - MD(55) LG(58), 440 -XL(61)
TAPE	Bianchi Hexagon tape: 2.5mm thickness, Full black
SEATPOST	Bianchi Custom D-Shape Offset: 20mm Back Seatpost lengths: 300mm-SX(47), 350mm- SM(51) MD(55), 380mm-LG(58) XL(61) Material: Epoxy - HM-HS Carbon Fiber Composite
SADDLE	Velomann MITORA 149 Hyper

IMPULSO COMP | GRX 610 DISC 2X12SP | YTB86



The image shown is indicative only. Components and graphic detail may differ from actual model. Bianchi reserves the right to amend specifications and/or prices.

COLOR	F7 - Ck16 / graphite Glossy F8 - terra/black Glossy
FRAME	IMPULSO Comp Disc Brake Specification: Flat Mount 140/160 Bottom Braket Standard: PressFit 86.5 X diam.41 Rear Axle: thru12 OLD (Over-Locknut-Dimension): 142 mm Front Derailleur: Brazed-on Type Rear Derailleur: SRAM UDH Hanger type Max Chainring Compatibility: 46T-52T (Shimano) - 43T-48T (SRAM) Tire Clearance: ETRTO 622-42mm Material: Carbon Fiber Composite
HEADSET	Bianchi Custom Acros ICR (Internal Cable Rounting)
FORK	Bianchi Impulso Integrated Fork Disc Brake Specification: Flat Mount 140/160 Front Axle: thru12 OLD (Over-Locknut-Dimension): 100 mm Tire Clearance: ETRTO 622-42mm Steer tube Diameter: 1 1/8 Material: Carbon Fiber Composite
SHIFTER	Shimano GRX 610 ST-RX610
FRONT DERAILLEUR	Shimano GRX 820 FD-RX820
REAR DERAILLEUR	Shimano GRX 820 RD-RX820 Maximum Cassette Sprocket 36T
CRANKSET	Shimano GRX 610 FC-RX610 46-30T Crank Length: 170mm-XS(47)-SM(51), 172.5mm-MD(55)-LG(58), 175mm-XL(61)
BOTTOM BRACKET	Shimano SM-BB72-41B, press fit
CHAIN	Shimano CN-M7100
CASSETTE / FREEWHEEL	Shimano CS-HG710-12 speed, 11-36T Driver body Interface: HG11

BRAKE	Shimano Hydraulic Brake, BR-RX400
DISC ROTOR	Shimano SM-RT70 IceTech Hub Interface: Centerlock Rotor Diameter: 160 mm (front&Rear)
WHEELSET	Fulcrum RapidRed 900 2-Way Fit Ready (for clincher and tubeless ready) Rim Diameter: 700C Material: Aluminum Alloy Rim Height: 24 mm Inner Wigth Channel: 22 mm
TIRE	Pirelli Cinturato™ GRAVEL M Classic, 45-622 tan sidewall
STEM	Velomann AICR Alloy Rise: -2° Steerer Diameter: 1-1/8 (28.6mm) HB interface Diameter: 1-1/4 (31.8mm) Stem Lengths: 80mm - XS(47), 90mm - SM(51), 100mm-MD(55), 110mm-LG(58),120m -XL(61)
HANDLEBAR	Velomann Gravel ICR Alloy Flare: 16° Drop: 130mm Reach 70mm Interface Diameter: 1 1/4 (31.8mm) HandleBar Widths: 400 - SX(47) SM(51), 420 - MD(55) LG(58), 440 -XL(61)
TAPE	Bianchi Hexagon tape: 2.5mm thickness, Full black
SEATPOST	Bianchi Custom D-Shape Offset: 20mm Back Seatpost lengths: 300mm-SX(47), 350mm- SM(51) MD(55), 380mm-LG(58) XL(61) Material: Epoxy - HM-HS Carbon Fiber Composite
SADDLE	Velomann MITORA 149 H2, cover: soft touch, padding: foam, shell: nylon carbon, rails: Steel, lenght: 250mm, width: 149mm

IMPULSO RC | REPARTO CORSE 43R CERAMITECH - FRONT



The image shown is indicative only. Components and graphic detail may differ from actual model. Bianchi reserves the right to amend specifications and/or prices.

SPOKES	N°16 straight pull + N°8 J-bend, flat, AISI 302+ Spoke pattern 2 to 1 Nipples: Alloy with secure lock
HUB	• Hub bodies: Aluminium alloy 6082 • Free wheel body: Aluminium alloy 7075 • Hub width: 100mm • Axle type: 12 mm Aluminium thru axle • Sealed cartridge bearings with CERAMIC balls • Brake interface: Center Lock
RIM	• ASTM classification: 2 • Material: 3K - high modulus carbon textile • Finish: Matt with fading effect • Tyre compatibility: tubeless-ready and clincher • Recommended tyre size: 700c, from 28 mm • Rim height: 43 mm (external width 31 mm) • Internal width: 25 mm • Decals: Water transfer under flatting
TYRES	• Tubeless ready • Clincher
WEIGHT	730g

IMPULSO RC | REPARTO CORSE 43R CERAMITECH - REAR



The image shown is indicative only. Components and graphic detail may differ from actual model. Bianchi reserves the right to amend specifications and/or prices.

SPOKES	N°16 straight pull + N°8 J-bend, flat, AISI 302+ Spoke pattern 2 to 1 Nipples: Alloy with secure lock
COMPATIBILITY	• HG FW body • XDR FW body • N3W FW body
HUB	• Hub bodies: Aluminium alloy 6082 • Free wheel body: Aluminium alloy 7075 • Ratchet system 5 pawls + 5 springs (45 teeth) • Hub width: 142 mm • Axle type: 12 mm Aluminium thru axle • Sealed cartridge bearings with CERAMIC balls • Brake interface: Center Lock
RIM	• ASTM classification: 2 • Material: 3K - high modulus carbon textile • Finish: Matt with fading effect • Tyre compatibility: tubeless-ready and clincher • Recommended tyre size: 700c, from 28 mm • Rim height: 43 mm (external width 31 mm) • Internal width: 25 mm • Decals: Water transfer under flatting
TYRES	• Tubeless ready • Clincher
WEIGHT	830g

IMPULSO RC | REPARTO CORSE 139RC CARBON



The image shown is indicative only. Components and graphic detail may differ from actual model. Bianchi reserves the right to amend specifications and/or prices.

DATA SHEET	• Lenght: 250 mm • Wide: 139 mm • Weight: 130 g* • Height to 72 mm (C.o.b.): 41 mm • Rails: 7 x 9,3 mm
TECHNOLOGY	• Cover: tessuto microfibra • Padding: gravitech • Inserts: PWR gel • Shell: carbon fiber • Rails: carbon

ARCADEX PRO | APEX/GX AXS DISC 1X12SP | YTB82



The image shown is indicative only. Components and graphic detail may differ from actual model. Bianchi reserves the right to amend specifications and/or prices.

COLOR	AF - CK16 / Green water - Matt AW - Forest Green / Graphite - Matt
FRAME	Arcadex PRO Disc Brake Specification: Flat Mount 140/160 Bottom Braket Standard: PressFit 86.5 X Ø41 Rear Axle: thru12 OLD (Over-Locknut-Dimension): 142 mm Front Derailleur: Non Compatible Rear Derailleur: SRAM UDH Hanger type Max Chainring Compatibility: 38T-44T Minimun Chainline: 45.5 mm Tire Clearance: ETRTO 622-50 mm SeatPost O.D: Ø27.2 mm Material: Epoxy - SM Carbon Fiber Composite
HEADSET	Bianchi Custom Acros ICR (Internal Cable Rounting) Spacers: 5 mm x1, 10 mm x3 Headtube Cover: Bianchi Costum Compresion Ring: 1.125 Inch Top Bearing: Angular contact Bearing 42x52x7 + seal Bottom Bearing: Angular contact Bearing 40x52x7 + seal Base Plate with seal, Steerer 1.5" (39.78 mm)
FORK	Suspension Fork: RockShox Rudy XPLR Travel: 30 mm Disc Brake Specification: Direct Flat Mount 160/180 Front Axle: thru12 OLD (Over-Locknut-Dimension): 100 mm Tire Clearance: ETRTO 622-50 mm Steer tube Diameter: Tapered 1 1/8" to 1.5" Fork Rake: 51 mm
SHIFTER	Sram Apex AXS HRD Shift System
REAR DERAILLEUR	Sram GX Eagle Transmission (T-type AXS)
CRANKSET	Sram Rival 1 WIDE 40T Crank Length: 170 mm-XS(47)-SM(51), 172.5 mm-MD(55)-LG(58), 175 mm-XL(61)
BOTTOM BRACKET	Sram DUB PressFit Road Wide 86.5 X Ø41

CHAIN	Sram GX Eagle Transmission Flattop
CASSETTE / FREEWHEEL	Sram GX Eagle Transmission, XS 1272 T-Type, 10-52T Driver Body Interface: XD
BRAKE	Sram APEX | Pad Type: Steel-Backed Organic
DISC ROTOR	Sram CenterLine Rotor Hub Interface: Centerlock Rotor Diameter: 160 mm (front&Rear)
WHEELSET	Velomann Terbium clincher and tubeless ready Rim Diameter: 700C Material: Carbon Rim Height: 30 mm Inner Wigth Channel: 25 mm
TIRE	Pirelli Cinturato™ GRAVEL M Classic, 45-622 tan sidewall
STEM	Velomann AICR Alloy Rise: -2° Steerer Diameter: 1-1/8" (28.6 mm) HB interface Diameter: 1-1/4" (31.8 mm) Stem Lengths: 80 mm - XS(47), 90 mm - SM(51), 100 mm-MD(55), 110 mm-LG(58),120 m -XL(61)
HANDLEBAR	Velomann Gravel ICR Alloy Flare: 16° | Drop: 130 mm | Reach 70 mm Interface Diameter: 1 1/4" (31.8 mm) HandleBar Widths: 400 - SX(47) SM(51), 420 - MD(55) LG(58), 440 -XL(61)
TAPE	Bianchi Hexagon tape 2.5 mm thickness, Full black
SEATPOST	Velomann Carbon UD SeatPost O.D: Ø27.2 mm | Seatpost lengths: 300 mm-SX(47), 350 mm-SM(51) MD(55), 400mm-LG(58) XL(61)"
SADDLE	Velomann MITORA 149 H1 cover: soft touch | padding: foam | shell: nylon carbon rails: Aisi Steel | lenght: 250 mm | width: 149 mm weight: 230g ± 2"

ARCADEX PRO | GRX 820/822 DISC 1X12SP | YTB85



The image shown is indicative only. Components and graphic detail may differ from actual model. Bianchi reserves the right to amend specifications and/or prices.

COLOR	AF - CK16 / Green water - Matt AW - Forest Green / Graphite - Matt
FRAME	Arcadex PRO Disc Brake Specification: Flat Mount 140/160 Bottom Braket Standard: PressFit 86.5 X Ø41 Rear Axle: thru12 OLD (Over-Locknut-Dimension): 142 mm Front Derailleur: Non Compatible Rear Derailleur: SRAM UDH Hanger type Max Chainring Compatibility: 38T-44T Minimun Chainline: 45.5 mm Tire Clearance: ETRTO 622-50 mm SeatPost O.D: Ø27.2 mm Material: Epoxy - SM Carbon Fiber Composite
HEADSET	Bianchi Custom Acros ICR (Internal Cable Rounting) Spacers:5 mm x1,10 mm x3 Headtube Cover: Bianchi Costum Compresion Ring: 1.125 Inch Top Bearing: Angular contact Bearing 42x52x7 + seal Bottom Bearing: Angular contact Bearing 40x52x7 + seal
FORK	Bianchi Arcadex Fork Disc Brake Specification: Flat Mount 140/160 Front Axle: thru12 OLD (Over-Locknut-Dimension): 100 mm Tire Clearance: ETRTO 622-50 mm Steer tube Diameter: 1 1/8" Material: Epoxy - SM Carbon Fiber Composite
SHIFTER	Shimano GRX 820 ST/BL-RX820
REAR DERAILLEUR	Shimano GRX 822 RD-RX822, SGS Maximum Cassette Sprocket 51T
CRANKSET	Shimano GRX 820 FC-RX820-1,40T Crank Length: 170 mm-XS(47)-SM(51), 172.5 mm-MD(55)-LG(58), 175 mm-XL(61)
BOTTOM BRACKET	Shimano SM-BB72-41B, press fit

CHAIN	Shimano CN-M7100
CASSETTE / FREEWHEEL	Shimano CS-M7100-12 speed, 11-51T Driver body Interface: MicroSpline
BRAKE	Shimano Hydraulic Brake, BR-RX820
DISC ROTOR	Shimano SM-RT70 IceTech Hub Interface: Centerlock Rotor Diameter: 160 mm (front&Rear)
WHEELSET	Velomann Terbium clincher and tubeless ready Rim Diameter: 700C Material: Carbon Rim Height: 30 mm Inner Wigth Channel: 25 mm
TIRE	Pirelli Cinturato™ GRAVEL M Classic, 45-622 tan sidewall
STEM	Velomann AICR Alloy Rise: -2° Steerer Diameter: 1-1/8" (28.6 mm) HB interface Diameter: 1-1/4" (31.8 mm) Stem Lengths: 80 mm-XS(47), 90 mm-SM(51), 100 mm-MD(55), 110 mm-LG(58), 120 m-XL(61)
HANDLEBAR	Velomann Gravel ICR Alloy Flare: 16° | Drop: 130 mm | Reach 70 mm | Interface Diameter: 1 1/4" (31.8 mm) | HandleBar Widths: 400 - SX(47) SM(51), 420 - MD(55) LG(58), 440 -XL(61)
TAPE	Bianchi Hexagon tape 2.5 mm thickness, Full black
SEATPOST	Velomann Carbon UD SeatPost O.D: Ø27.2 mm | Seatpost lengths: 300 mm-SX(47), 350 mm- SM(51) MD(55), 400 mm-LG(58) XL(61)
SADDLE	Velomann MITORA 149 H1 cover: soft touch | padding: foam | shell: nylon carbon rails: Aisi Steel | lenght: 250 mm | width: 149 mm weight: 230g ± 2

ARCADEX COMP | APEX DISC 1X12SP | YTB88



The image shown is indicative only. Components and graphic detail may differ from actual model. Bianchi reserves the right to amend specifications and/or prices.

COLOR	AY - CK16 / Graphite - Glossy AZ - Metal Sand / Graphite - Glossy
FRAME	Arcadex Comp Disc Brake Specification: Flat Mount 140/160 Bottom Braket Standard: PressFit 86.5 X Ø41 Rear Axle: thru12 OLD (Over-Locknut-Dimension): 142 mm Front Derailleur: Non Compatible Rear Derailleur: SRAM UDH Hanger type Max Chainring Compatibility: 38T-44T Minimun Chainline: 45.5 mm Tire Clearance: ETRTO 622-50 mm SeatPost O.D: Ø27.2 mm Material: Epoxy - SM Carbon Fiber Composite
HEADSET	Bianchi Custom Acros ICR (Internal Cable Rounting) Spacers:5 mm x1, 10 mm x3 Headtube Cover: Bianchi Costum Compresion Ring: 1.125 Inch Top Bearing: Angular contact Bearing 42x52x7 + seal Bottom Bearing: Angular contact Bearing 40x52x7 + seal
FORK	Bianchi Arcadex Fork Disc Brake Specification: Flat Mount 140/160 Front Axle: thru12 OLD (Over-Locknut-Dimension): 100 mm Tire Clearance: ETRTO 622-50 mm Steer tube Diameter: 1 1/8" Material: Epoxy - SM Carbon Fiber Composite
SHIFTER	Sram Apex D1
REAR DERAILLEUR	Sram Apex Eagle Maximum Cassette Sprocket 52T
CRANKSET	Sram Apex 1 WIDE 40T Crank Length: 170 mm-XS(47)-SM(51), 172.5 mm-MD(55)-LG(58), 175 mm-XL(61)
BOTTOM BRACKET	Sram DUB PressFit Road Wide 86.5 X Ø41
CHAIN	Sram SX Eagle

CASSETTE / FREEWHEEL	Sram SX Eagle, PG-1210 11-50T Driver Body Interface: HG11
BRAKE	Sram APEX | Pad Type: Steel-Backed Organic
DISC ROTOR	Sram CenterLine Rotor Hub Interface: Centerlock Rotor Diameter: 160 mm (front&Rear)
WHEELSET	Fulcrum RapidRed 900 2-Way Fit Ready (for clincher and tubeless ready) Rim Diameter: 700C Material: Aluminum Alloy Rim Height: 24 mm Inner Wigth Channel: 22 mm
TIRE	Pirelli Cinturato™ GRAVEL M Classic, 45-622 tan sidewall
STEM	Velomann AICR Alloy Rise: -2° Steerer Diameter: 1-1/8" (28.6mm) HB interface Diameter: 1-1/4" (31.8mm) Stem Lengths: 80 mm-XS(47), 90 mm-SM(51), 100 mm-MD(55), 110 mm-LG(58), 120 m -XL(61)
HANDLEBAR	Velomann Gravel ICR Alloy Flare: 16° | Drop: 130 mm | Reach 70 mm | Interface Diameter: 1 1/4" (31.8 mm) | HandleBar Widths: 400 - SX(47) SM(51), 420 - MD(55) LG(58), 440 - XL(61)
TAPE	Bianchi Hexagon tape 2.5 mm thickness, Full black
SEATPOST	Velomann Carbon UD SeatPost O.D: Ø27.2 mm Seatpost lengths: 300 mm-SX(47), 350 mm-SM(51) MD(55), 400 mm-LG(58) XL(61)
SADDLE	Velomann MITORA 149 H2 cover: soft touch | padding: foam | shell: nylon carbon rails: Steel | lenght: 250mm | width: 149mm

ARCADEX COMP | GRX 610/822 DISC 1X12SP | YTB87



The image shown is indicative only. Components and graphic detail may differ from actual model. Bianchi reserves the right to amend specifications and/or prices.

COLOR	AY - CK16 / Graphite - Glossy AZ - Metal Sand / Graphite - Glossy
FRAME	Arcadex Comp Disc Brake Specification: Flat Mount 140/160 Bottom Braket Standard: PressFit 86.5 X Ø41 Rear Axle: thru12 OLD (Over-Locknut-Dimension): 142 mm Front Derailleur: Non Compatible Rear Derailleur: SRAM UDH Hanger type Max Chainring Compatibility: 38T-44T Minimun Chainline: 45.5 mm Tire Clearance: ETRTO 622-50 mm SeatPost O.D: Ø27.2 mm Material: Epoxy - SM Carbon Fiber Composite
HEADSET	Bianchi Custom Acros ICR (Internal Cable Rounting) Spacers:5 mm x1,10 mm x3 Headtube Cover: Bianchi Costum Compresion Ring: 1.125 Inch Top Bearing: Angular contact Bearing 42x52x7 + seal Bottom Bearing: Angular contact Bearing 40x52x7 + seal
FORK	Bianchi Arcadex Fork Disc Brake Specification: Flat Mount 140/160 Front Axle: thru12 OLD (Over-Locknut-Dimension): 100 mm Tire Clearance: ETRTO 622-50 mm Steer tube Diameter: 1 1/8" Material: Epoxy - SM Carbon Fiber Composite
SHIFTER	Shimano GRX 610 ST/BL-RX610
REAR DERAILLEUR	Shimano GRX 822 RD-RX822, SGS Maximum Cassette Sprocket 51T
CRANKSET	Shimano GRX 610 FC-RX610-1, 40T Crank Length: 170 mm-XS(47)-SM(51), 172.5 mm-MD(55)-LG(58), 175 mm-XL(61)
BOTTOM BRACKET	Shimano SM-BB72-41B, press fit
CHAIN	Shimano CN-M7100

CASSETTE / FREEWHEEL	Shimano CS-M7100-12 speed, 11-51T Driver body Interface: MicroSpline
BRAKE	Shimano Hydraulic Brake, BR-RX400
DISC ROTOR	Shimano SM-RT70 IceTech Hub Interface: Centerlock Rotor Diameter: 160 mm (front&Rear)
WHEELSET	Fulcrum RapidRed 900 2-Way Fit Ready (for clincher and tubeless ready) Rim Diameter: 700C Material: Aluminum Alloy Rim Height: 24 mm Inner Wigth Channel: 22 mm
TIRE	Pirelli Cinturato™ GRAVEL M Classic, 45-622 tan sidewall
STEM	Velomann AICR Alloy Rise: -2° Steerer Diameter: 1-1/8" (28.6 mm) HB interface Diameter: 1-1/4" (31.8 mm) Stem Lengths: 80 mm-XS(47), 90 mm-SM(51), 100 mm-MD(55), 110 mm-LG(58),120 m -XL(61)
HANDLEBAR	Velomann Gravel ICR Alloy Flare: 16° | Drop: 130 mm | Reach 70 mm | Interface Diameter: 1 1/4" (31.8 mm) | HandleBar Widths: 400-SX(47) SM(51), 420-MD(55) LG(58), 440-XL(61)
TAPE	Bianchi Hexagon tape 2.5 mm thickness, Full black
SEATPOST	Velomann Carbon UD SeatPost O.D: Ø27.2 mm Seatpost lengths: 300 mm-SX(47), 350 mm-SM(51) MD(55), 400 mm-LG(58) XL(61)
SADDLE	Velomann MITORA 149 H2 cover: soft touch | padding: foam | shell: nylon carbon rails: Steel | lenght: 250 mm | width: 149 mm

IMPULSO | GRX820 12SP | YTB8C



The image shown is indicative only. Components and graphic detail may differ from actual model. Bianchi reserves the right to amend specifications and/or prices.

COLOR	AK - Fall Green / Carbon UD Fork Full Glossy IP - CK16 / Aquamarine
FRAME	IMPULSO gravel ALU 11/8 aheaset ,seat post 31.6mm, thru axle 12x142mm, flat mount disc version, PF41, compatible with 40mm tire and mudguard and rear carrier predisposition. sizes 47-50-53-55-57-59-61-63cm
SEATPOST CLAMP	Aluminium clamp, light weight, 35mm anti-crimp
HEADSET	Fsa NO.8B/ZS4D 1-1/8
FORK	Full Carbon 11/8, flat mount, disc brake, thru axle 12x100mm
SHIFTER	Shimano GRX 810 11sp Hydraulic disc brake, ST-RX820, BR-RX820 for 160mm rotor
REAR DERAILLEUR	Shimano GRX 820 12sp, RD-RX820
FRONT DERAILLEUR	Shimano GRX 820 12sp, FD-RX820
CRANKSET	GRX 820 12sp FC-RX820-2, GRX, 12-speed, holloetech 2, 170-172.5-175mm, 48-31T w/o BB parts Crank Length: 170mm-47/54cm, 172.5mm-55/59cm, 175mm-60/63cm
BOTTOM BRACKET	Shimano, SM-BB72-41B, press fit for road
CHAIN	Shimano CN-M6100, 12sp
CASSETTE / FREEWHEEL	Shimano 105 12sp, CS-HG71012, 11-12-13-14-15-17-19-21-24-28-32-36T
BRAKE	Shimano flat mount hydraulic disc brake, included in the shifter

BRAKE LEVER	included
DISC ROTOR	Shimano rotor for disc brake center lock, 160mm
FRONT HUB	Formula CL-712 road disc , alloy 32h, center lock, thru axle 12x100mm, 2SB bearing
REAR HUB	Formula road disc , center lock, thru axle 12x142mm, 4SB bearing for Shimano
RIM/WHEELSET	Velomann disc 700c 622-21, profile 24mm, sleeve join, 32hole, tubeless ready
TIRE	Kenda Alluvium 700x40, 60TPI
STEM	Velomann, Alloy 6061, raise +/ - 7°, height 38mm, Oversize, 1 1/8, Ext: 70mm-47cm, 90mm-50/53cm, 100mm-55cm, 110mm-57/59cm, 120mm-61/63cm
HANDLEBAR	Velomann Aluminum 6061, reach 70mm, flare angle 16°, drop cc 120 x size 40cm and 130mm x size 42-44-46cm, size: 40cm 47/50/53 - 42cm 55/57/59 - 44cm 61/63
GRIP / TAPE	Bianchi cork, black
SEATPOST	Velomann Alloy shaft AL6061, alloy head, 15mm offset, 31,6mm, Length: 350mm-47/63cm
SADDLE	Velomann, lenght/wide 278x144mm

IMPULSO | GRX 600 | YSB1C



The image shown is indicative only. Components and graphic detail may differ from actual model. Bianchi reserves the right to amend specifications and/or prices.

COLOR	AK: Fall Green/Carbon UD fork Full Glossy IP: CK16 Aquamarine
FRAME	"IMPULSO ALL ROAD ALU 1""1/8 aheaset ,seat post 31.6mm, thru axle 12x142mm, flat mount disc version, PF41 SHIMANO, compatible with 40mm tire and mudguard and rear carrier predisposition. sizes 47-50-53-55-57-59-61-63cm"
SEATPOST CLAMP	MX-112C Aluminium clamp, light weight, 35mm anti-crimp
HEADSET	NO.8B/ZS4D 1.1/8" semi-integrated lower part + integrated upper part, w/H2166B 15mm Top cover tapered 46mm/50 OD head tube
FORK	Full Carbon 1"1/8, flat mount, disc brake, thru axle 12x100mm
SHIFTER	Shimano GRX 600 11sp Hydraulic disc brake
REAR DERAILLEUR	Shimano GRX 810, 11sp, RD-RX810
FRONT DERAILLEUR	Shimano GRX 810, 11sp, FD-RX810, GRX for rear 11-speed, down-swing, down pull, braze-on type, CS-angle:61-66, for top gear:46-50T, CL:46mm
CRANKSET	Shimano GRX 600, 11sp, FC-RX600, 2-pcs FC, 170-172.5-175mm, 46-30T, Crank Length: 170mm-47/54cm, 172.5mm-55/59cm, 175mm-60/63cm
BOTTOM BRACKET	Shimano SM-BB71-41B, press fit for road
CHAIN	Shimano CN-HG601-11, for 11-speed, 116 links

CASSETTE / FREEWHEEL	Shimano 105, 11sp, CS-HG70011, 11-13-15-17-19-21-23-25-27-30-34T
BRAKE	Shimano BR-RX400 flat mount hydraulic disc brake, included in the shifter
BRAKE LEVER	included
DISC ROTOR	Shimano SM-RT70 rotor for disc brake center lock , with Ice Technology, S 160mm
RIM/WHEELSET	Velomann disc 700c 622-21, profile 24mm, sleeve join, 32hole, tubeless ready
TIRE	Kenda Alluvium 700x40, 60TPI
STEM	Velomann, Alloy 6061, raise +/ - 7°, height 38mm, Oversize, 1 1/8", 70-90-100-110-120, Ext: 70mm-47cm, 90mm-50/53cm, 100mm-55cm, 110mm-57/59cm, 120mm-61/63cm
HANDLEBAR	Velomann Aluminum 6061, reach 70mm, flare angle 16°, drop cc 120 x size 40cm and 130mm x size 42-44-46cm, size: 40cm 47/50/53 - 42cm 55/57/59 - 44cm 61/63
GRIP / TAPE	La Spirale Ribbon cork, color= Black
SEATPOST	Velomann Alloy shaft AL6061, alloy head, 15mm offset, 31,6mm, length: 350mm-47/63cm
SADDLE	Velomann, hole, steel rail, cover PU soft touch, lenght/wide 280x145mm

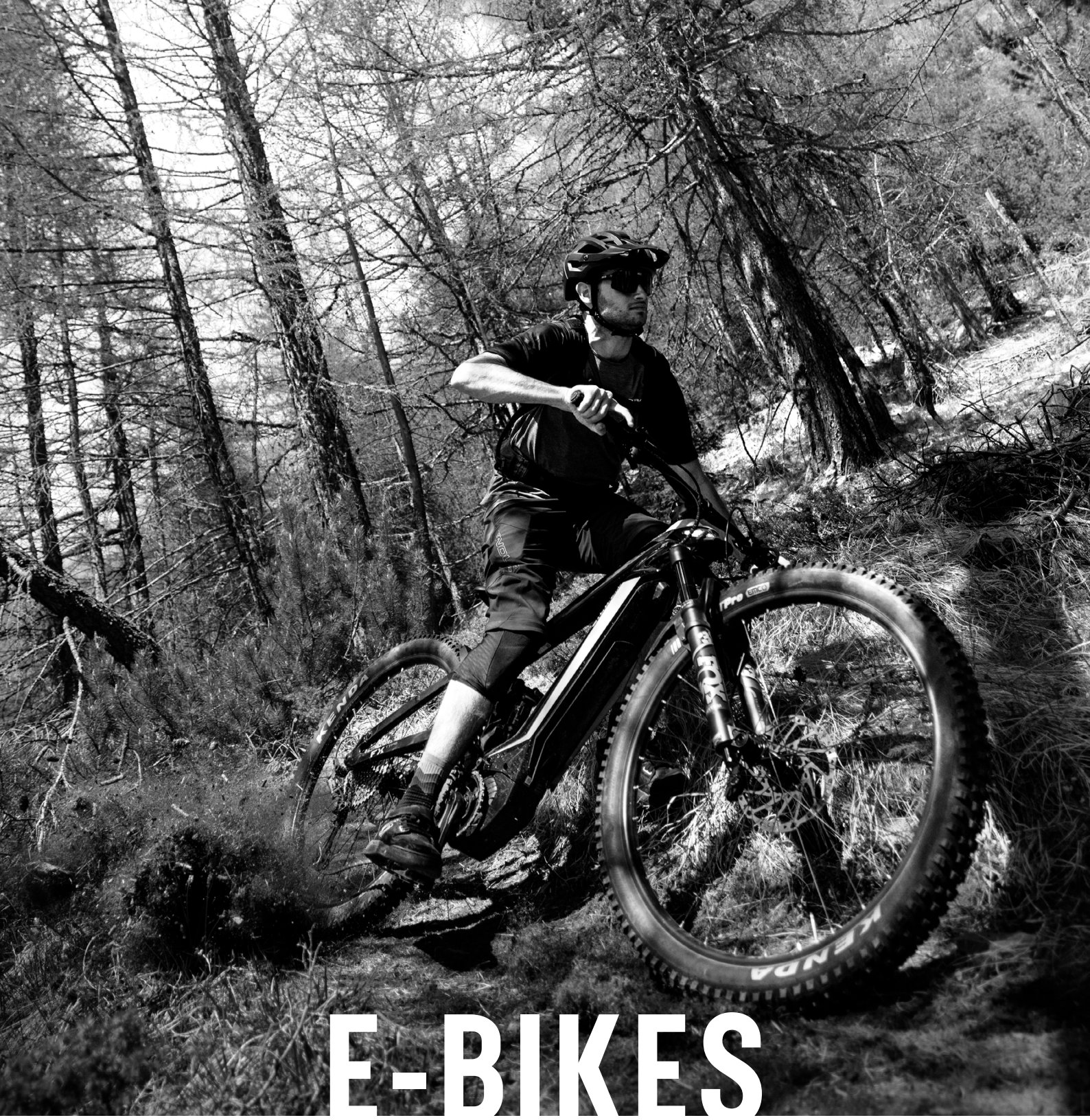

E-BIKES

E-ROAD | E-GRAVEL | E-MTB | E-TOURER | E-URBAN

E-ROAD

E-OLTRE | DURA-ACE 2X12SP X30 250 | YUBN7



The image shown is indicative only. Components and graphic detail may differ from actual model. Bianchi reserves the right to amend specifications and/or prices.

COLOR	ZQ: Celeste metallic / CK16-Graphite Full Matt
FRAME	Oltre e-road carbon, fully internal cable routing, mechanic and electronic groupsets, BB pressfit, disc brake flat mount, OLD 135mm sizes: 47, 50, 53, 55, 57, 59, 61
SEATPOST CLAMP	included in the frame
HEADSET	Acros / FSA, internal cable routing ICR
FORK	Full carbon aero road ICR, integrated head , disc brake flat mount, thru axle 12x100
SHIFTER	Shimano Dura-Ace Di2 12 speed
REAR DERAILLEUR	Shimano Dura-Ace Di2 12 speed RD-R9250
FRONT DERAILLEUR	Shimano Dura-Ace Di2 12 speed FD-R9250
CRANKSET	Shimano Dura-Ace Di2 12 speed, FC-R9200, hollowtech 2, 52x36T Crank Length: 47, 50, 53 - 170mm 55, 57, 59 - 172.5mm 61 - 175mm
BOTTOM BRACKET	Mahle torque sensor BB
CHAIN	Shimano Ultegra 12 sp
CASSETTE / FREEWHEEL	Shimano Ultegra 12sp 11-34T 11-12-13-14-15-17-19-21-24-27-30-34T

BRAKE	included in the shifter
DISC ROTOR	Shimano RT86 6bolt,160mm rear Shimano MT800, centerlock 160mm front
RIM/WHEELSET	Velomann Plutonium, carbon, 21-622, profile 50mm, 24hole front, 32 hole rear, tubeless ready
TIRE	Vittoria Rubino V 28-622 TLR, G2.0, 100TPI
STEM	Reparto Corse integrated handlebar, carbon, for Acros ICR system drop 125mm, reach 80mm Ext: 90/380 (47cm) ; 100/400 (50-53cm) ; 110/400 (55-57cm); 120/420 (59-61cm)
HANDLEBAR	included in the stem
GRIP / TAPE	Bianchi Arrow premium tape, 2.5mm thickness, full black
SEATPOST	Full carbon aero shape, special Clamp type with alloy head adjustable and reversible +/- 35mm; lenghts: 300mm =47› 50cm; 350mm= 53›61
SADDLE	Velomann Mitora Lite 139 saddle 139x250mm, carbon rail 7x9,1mm
MOTOR UNIT	Mahle X30 Drive unit, 45Nm, 250W iWoc ONE head unit, with e-shifters
BATTERY	Mahle 'iX250w Battery Pack

E-OLTRE | ULTEGRA 2X12SP X30 250 | YUBN9



The image shown is indicative only. Components and graphic detail may differ from actual model. Bianchi reserves the right to amend specifications and/or prices.

COLOR	ZQ: Celeste metallic / CK16-Graphite Full Matt
FRAME	Oltre e-road carbon, fully internal cable routing, mechanic and electronic groupsets, BB pressfit, disc brake flat mount, OLD 135mm sizes: 47, 50, 53, 55, 57, 59, 61
SEATPOST CLAMP	included in the frame
HEADSET	Acros / FSA, internal cable routing ICR
FORK	Full carbon aero road ICR, integrated head , disc brake flat mount, thru axle 12x100
SHIFTER	Shimano Ultegra Di2 12 speed
REAR DERAILLEUR	Shimano Ultegra Di2 12 speed RD-R8150
FRONT DERAILLEUR	Shimano Ultegra Di2 12 speed FD-R8150
CRANKSET	Shimano Ultegra Di2 12 speed, FC-R8100, hollowtech 2, 50x34T Crank Length: 47, 50, 53 - 170mm 55, 57, 59 - 172.5mm 61 - 175mm
BOTTOM BRACKET	Mahle torque sensor BB
CHAIN	Shimano 105 12 speed
CASSETTE / FREEWHEEL	Shimano 105 12 speed, 11-34 11-12-13-14-15-17-19-21-24-27-30-34T

BRAKE	included in the shifter
DISC ROTOR	Shimano RT86 6bolt,160mm rear Shimano MT800, centerlock 160mm front
RIM/WHEELSET	Velomann Plutonium, carbon, 21-622, profile 50mm, 24hole front, 32 hole rear, tubeless ready
TIRE	Vittoria Rubino V 28-622 TLR, G2.0, 100TPI
STEM	Velomann, AL6061, fully internal cable routing stem, compatible with Acros AICR system Ext: 90mm (47), 100mm(50/53), 110mm(55/57), 120mm(59/61)
HANDLEBAR	Velomann Aero Compact handlebar, diam. 31,8mm, reach 74mm, drop 116mm, Size: 400mm-47~53cm, 420mm-55~61cm
GRIP / TAPE	Bianchi Hexagon tape, 2.5mm thickness, black
SEATPOST	Full carbon aero shape, special Clamp type with alloy head adjustable and reversible +/- 35mm; lenghts: 300mm =47› 50cm; 350mm= 53›61
SADDLE	Velomann Gnd Full-fit, carbon steel rail, 262x145
MOTOR UNIT	Mahle X30 Drive unit, 45Nm, 250W iWoc ONE head unit, with e-shifters
BATTERY	Mahle 'iX250w Battery Pack

E-OLTRE | 105 2X12SP X30 250 | YUBN8



The image shown is indicative only. Components and graphic detail may differ from actual model. Bianchi reserves the right to amend specifications and/or prices.

COLOR	ZQ: Celeste metallic / CK16-Graphite Full Matt
FRAME	Oltre e-road carbon, fully internal cable routing, mechanic and electronic groupsets, BB pressfit, disc brake flat mount, OLD 135mm sizes: 47, 50, 53, 55, 57, 59, 61
SEATPOST CLAMP	included in the frame
HEADSET	Acros / FSA, internal cable routing ICR
FORK	Full carbon aero road ICR, integrated head , disc brake flat mount, thru axle 12x100
SHIFTER	Shimano 105 12 speed
REAR DERAILLEUR	Shimano 105 12 speed RD-R7100
FRONT DERAILLEUR	Shimano 105 12 speed FD-R7100
CRANKSET	Shimano 105 12 speed, FC-R7100, hollowtech 2, 50x34T Crank Length: 47, 50, 53 - 170mm 55, 57, 59 - 172.5mm 61 - 175mm
BOTTOM BRACKET	Mahle torque sensor BB
CHAIN	Shimano 105 12 speed
CASSETTE / FREEWHEEL	Shimano 105 12 speed, 11-34 11-12-13-14-15-17-19-21-24-27-30-34T

BRAKE	included in the shifter
DISC ROTOR	Shimano RT86 6bolt,160mm rear Shimano MT800, centerlock 160mm front
RIM/WHEELSET	Velomann Plutonium, carbon, 21-622, profile 50mm, 24hole front, 32 hole rear, tubeless ready
TIRE	Vittoria Rubino V 28-622 TLR, G2.0, 100TPI
STEM	Velomann Viper, Alloy 6061, raise - 7°, semi-integrated cable routing Ext:90mm-47cm, 100mm-50~53cm, 110mm-55~57cm, 120mm-59~61cm
HANDLEBAR	Velomann Aero Compact, alloy 6061 diam. 31,8mm, reach 74mm, drop 116mm Size: 400mm-47~53cm,420mm-55~59cm,440mm-61cm
GRIP / TAPE	Bianchi Hexagon tape, 2.5mm thickness, black
SEATPOST	Full carbon aero shape, special Clamp type with alloy head adjustable and reversible +/- 35mm; lenghts: 300mm =47› 50cm; 350mm= 53›61
SADDLE	Velomann Gnd Full-fit, carbon steel rail, 262x145
MOTOR UNIT	Mahle X30 Drive unit, 45Nm, 250W iWoc ONE head unit
BATTERY	Mahle 'iX250w Battery Pack

E-GRAVEL

e-ARCADEX



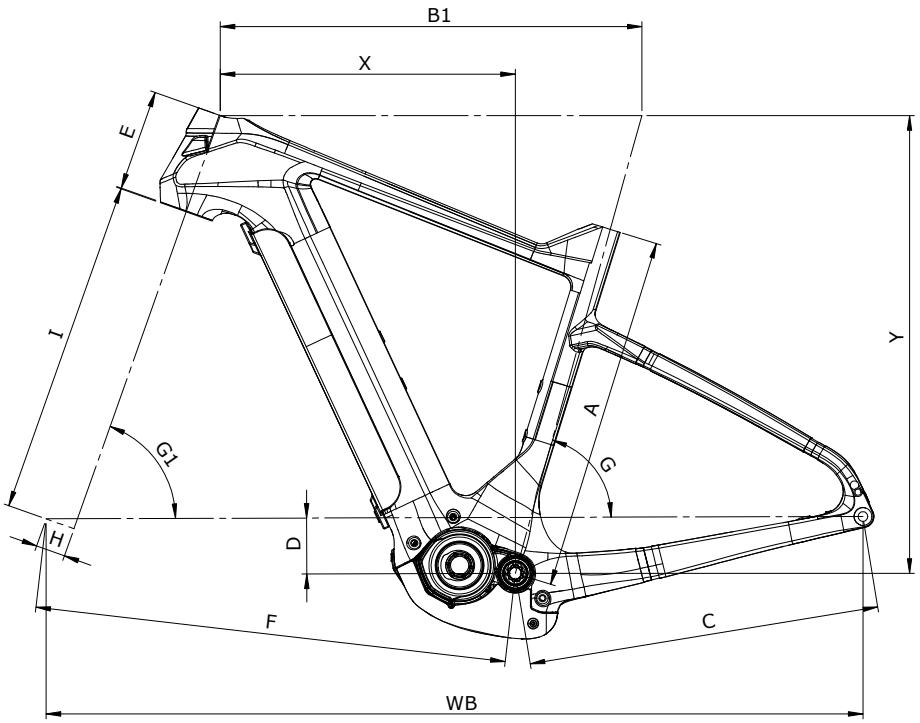

E-Arcadex													
SIZE	A	B1	C	D	E	F	G	G1	H	I	X	Y	WB
XS	440	520	434	70	125	596	74.5°	70.5°	50	416	364	564	1020
SM	480	532	434	70	140	603	74°	70.5°	50	416	366	579	1028
MD	520	548	434	70	155	609	73.5°	71°	50	416	372	594	1034
LG	550	563	434	70	170	625	73.5°	71°	50	416	382	609	1049
XL	580	583	434	70	185	640	73°	71°	50	416	392	623	1064

E-ARCADEX KEY FEATURES

- Battery 500Wh
- Torque 85Nm
- Tyres up to 700x45
- Seatpost stroke 80mm
- Seatpost suspension 40mm

E-ARCADEX TOURER | APEX 12SP | YTB7H



The image shown is indicative only. Components and graphic detail may differ from actual model. Bianchi reserves the right to amend specifications and/or prices.

COLOR	DX - Desert Full Matt 4S - Glacier Full Glossy
FRAME	e-Arcadex Carbon sizes: 47, 51, 55, 58, 61 - 12x142 mm thru axle - Flat mount 140 disc brake type - Fender compatible
SEATPOST CLAMP	Seatpost Lock SET d31,8mm Arcadex
HEADSET	FSA SMR HS with 1-1/8
FORK	Full Carbon 1.5 flat mount, disc brake, thru axle 12x100mm
SHIFTER	SRAM Apex 1x12sp
REAR DERAILLEUR	SRAM Apex XPLR 1x12sp
CRANKSET	FSA E-bike KFX Crankset - ISIS / 165mm - 170mm - 175mm / Hollow Alloy FSA Bosch Gen4 STD Alloy Spider+CR BCD104 42T
BOTTOM BRACKET	Included in the Drive unit
CHAIN	SRAM Apex 1x12sp
CASSETTE / FREEWHEEL	SRAM XPLR PG-1231 Cassette, HG, 12sp, 11-12-13-15-17-19-21-24-28-32-38-44T
BRAKE	Sram Apex included in the shifter
DISC ROTOR	Sram Paceline, Center lock, 160mm
FRONT HUB	Formula CL-712 road disc , alloy 32h, center lock, J-bend, thru axle 12x100mm
REAR HUB	Formula RXC-142S road disc , center lock, J-bend, thru axle 12xx142mm

RIM/WHEELSET	Velomann, 23-622, profile 24,5mm, 32hole, tubeless ready
TIRE	Continental 40-622 Terra Trail
STEM	Velomann, Alloy 6061 , 1 1/4, raise 0° Ext: 80mm-XS/S, 100mm-M, 120mm-L/XL
HANDLEBAR	Velomann Aluminum 6061, reach 70mm, flare angle 16°, drop cc 120 x size 40cm and 130mm x size 42-44-46cm Size: 400mm-XS/S, 420mm-M/L, 440mm-XL
GRIP / TAPE	La Spirale Ribbon cork
SEATPOST	Velomann Alloy shaft, alloy head, 15mm offset, 31,6mm Length: 300mm/XS - SM ; L350mm/MD - LG -XL
SADDLE	Velomann, carbon steel rail, 262x145
FRONT LIGHT	Supernova Mini2 - 235 lumen - 4 W a 12 V
REAR LIGHT	Integrated in the mudguard
REAR CARRIER / PLATE	SKS Infinity GT3
MUDGUARD / STAY	SKS A46 profile, integrated tail light XELTEC, 12V
MOTOR UNIT	Bosch Performance Line CX Smart System, 85Nm, Kiox display
BATTERY	Bosch Powertube 500Wh integrated battery

E-ARCADEX TOURER | GRX 11SP | YS B3H



The image shown is indicative only. Components and graphic detail may differ from actual model. Bianchi reserves the right to amend specifications and/or prices.

COLOR	DX - Desert Full Matt 4S - Glacier Full Glossy
FRAME	e-Arcadex Carbon sizes: 47, 51, 55, 58, 61 - 12x142 mm thru axle - Flat mount 140 disc brake type - Fender compatible
SEATPOST CLAMP	Seatpost Lock SET d31,8mm Arcadex
HEADSET	FSA SMR HS with 1-1/8
FORK	Full Carbon 1.5 flat mount, disc brake, thru axle 12x100mm
SHIFTER	Shimano GRX 1x11sp
REAR DERAILLEUR	Shimano GRX 1x11sp
CRANKSET	FSA E-bike KFX Crankset - ISIS / 165mm - 170mm - 175mm / Hollow Alloy FSA Bosch Gen4 STD Alloy Spider+CR BCD104 42T
BOTTOM BRACKET	Included in the Drive unit
CHAIN	KMC e11 EPT 11sp
CASSETTE / FREEWHEEL	Shimano DEOR 11sp 11-13-15-17-19-21-24-28-32-37-42T
BRAKE	Sram Apex included in the shifter
DISC ROTOR	Shimano RT-MT800, 160mm
FRONT HUB	Formula CL-712 road disc , alloy 32h, center lock, J-bend, thru axle 12x100mm
REAR HUB	Formula RXC-142S road disc , center lock, J-bend, thru axle 12xx142mm

RIM/WHEELSET	Velomann, 23-622, profile 24,5mm, 32hole, tubeless ready
TIRE	Continental 40-622 Terra Trail
STEM	Velomann, Alloy 6061 , 1 1/4, raise 0° Ext: 80mm-XS/S, 100mm-M, 120mm-L/XL
HANDLEBAR	Velomann Aluminum 6061, reach 70mm, flare angle 16°, drop cc 120 x size 40cm and 130mm x size 42-44-46cm Size: 400mm-XS/S, 420mm-M/L, 440mm-XL
GRIP / TAPE	La Spirale Ribbon cork
SEATPOST	Velomann Alloy shaft, alloy head, 15mm offset, 31,6mm Length: 300mm/XS - SM ; L350mm/MD - LG -XL
SADDLE	Velomann, carbon steel rail, 262x145
FRONT LIGHT	Supernova Mini2 - 235 lumen - 4 W a 12 V
REAR LIGHT	Integrated in the mudguard
REAR CARRIER / PLATE	SKS Infinity GT3
MUDGUARD / STAY	SKS A46 profile, integrated tail light XELTEC, 12V
MOTOR UNIT	Bosch Performance Line CX, 85Nm, Kiox display
BATTERY	Bosch Powertube 500Wh integrated battery

E-MTB

E-S U V | GX 12S P | YR/YSBQ3



The image shown is indicative only. Components and graphic detail may differ from actual model. Bianchi reserves the right to amend specifications and/or prices.

COLOR	CM - Black Matt / CK16-Chrome Glossy KT - Black / CK16 - Matt
FRAME	e-SUV carbon sizes: 43, 48, 53 - 12x148 mm thru axle dropouts - Post mount 180 disc brake type - 160/150mm travel front - 150mm travel rear
REAR SHOCK	RockShox Deluxe Select+, 185/55, DebonAir Linear, Damper Type RL, Compression tune M, Lockout Force 430, external rebound adjustment
SEATPOST CLAMP	Seatpost expander e-SUV
HEADSET	NO.55R/558 1.5
FORK	RockShox ZEB Select 29, 150mm travel, 1.5 tapered HT, Maxle Stealth 15x110mm BOOST axle, minimum 200mm rotor, maximum 220mm rotor, 44mm rake, 63mm crown, DebonAri+, extl rebnd, 38mm stanchions
SHIFTER	Sram GX EAGLE 1x12
REAR DERAILLEUR	Sram GX Eagle 12sp
CRANKSET	Shimano CRANK ARM SET, FC-EM600, 165MM, SRAM chainring XSYNC2 34T
BOTTOM BRACKET	included in the motor
CHAIN	Sram NX EAGLE, 12sp

CASSETTE / FREEWHEEL	Sram PG1230, 12sp, 11-50T
BRAKE	SHIMANO, BL-M6100, BR-M6120, 4 pistons
DISC ROTOR	Shimano, SM-RT64, RT-EM600, L 203MM
RIM/WHEELSET	DT Swiss, H1900 Spline 27,5 rear 35mm & 29 front 30mm, 15x110TA front, 12x148TA rear Shimano body, TL-ready rim w/eyelets
TIRE	Front: Scorpion E-MTB M 29x2.6 TLR, 60tpi Rear: Scorpion E-MTB R 27.5x2.6 TLR, 60tpi
STEM	Velomann, 50mm, 35mm, 11/8
HANDLEBAR	Velomann, width 780mm, diam.35mm, rise 18mm, backsweep 8°
GRIP / TAPE	T-One Rock T-GP34 single lock grip, TPR, 130mm, plastic inner body, aluminium clamp
SEATPOST	Alpha1 Series - 31.6 mm - Remote RM07 I-Spec EV - 125 mm - for size M 150 mm - for size L/XL
SADDLE	Fi'zi:k Alpaca Terra F207URN , S alloy rail, 249x145
FRONT LIGHT	Spanninga custom integrated light
REAR LIGHT	Spanninga custom integrated light
MOTOR UNIT	Shimano EP8
BATTERY	Integrated battery 720Wh

e-VERTIC



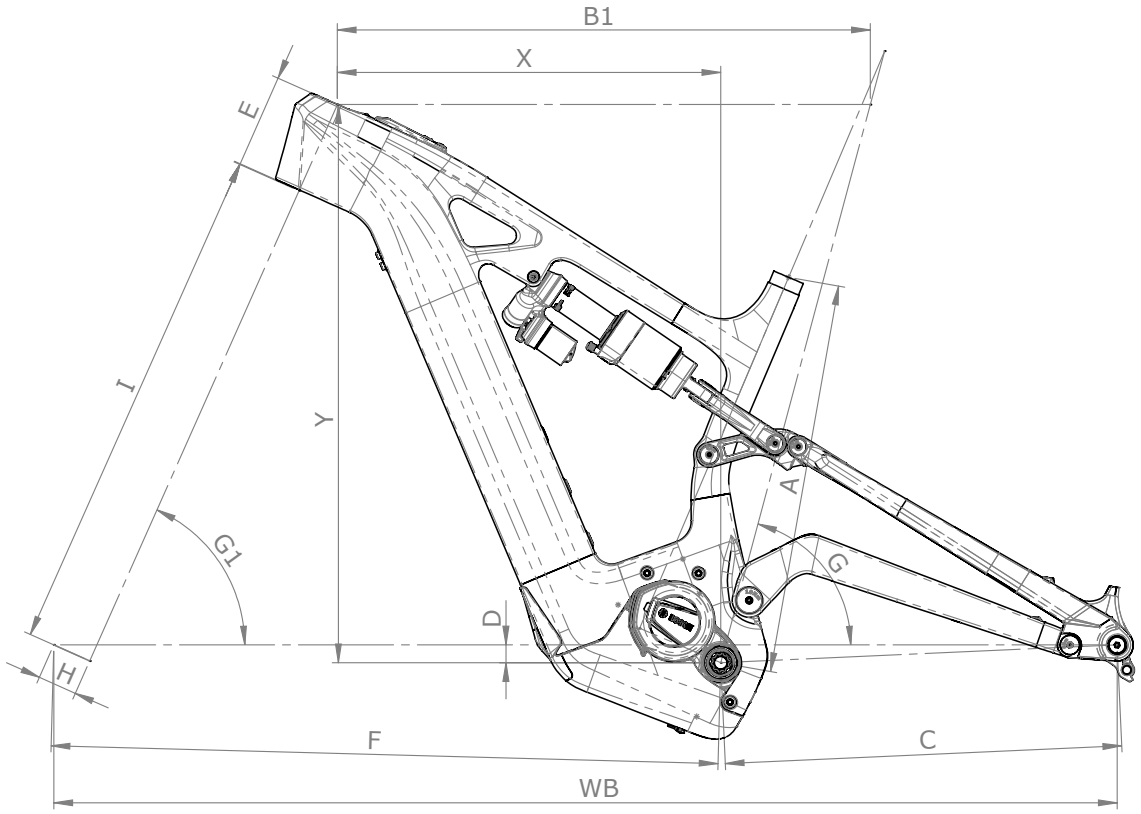

E-Vertic FX Type Pro 29'' - 160/160mm travel													
SIZE	A	B1	C	D	E	F	G	G1	H	I	X	Y	WB
MD	432	597	445	20	105	748	75°	66°	44	577	429	626	1192
LG	477	624	445	20	120	784	75°	66°	44	577	460	639	1228
XL	520	661	445	20	140	822	75°	66°	44	577	490	658	1266

E-VERTIC FX-TYPE PRO KEY FEATURES

- 160mm full suspension carbon MTB frame
- 750Wh Battery
- Torque 85Nm
- Integrated cable routing
- 780mm handlebar
- 50mm stem
- Dropper seatpost
- 29"x2.6 tires

E-VERTIC FX-TYPE PRO | GX A XS 12S P | YS/YTBD6



The i

COLOR	E3 - Dark silver/antra-white decals
FRAME	e-VERTIC FX-Type Pro sizes: 43, 48, 53 - 12x148 mm thru axle dropouts - Post mount 180 disc brake type - 160mm travel front & rear - Internal cable routing in steerer
REAR SHOCK	Fox Float X2, Factory, 230/65, EVOL, 2 position
SEATPOST CLAMP	custom seatpostclamp
HEADSET	Acros AIX-545 1.8 top / 1.5 - internal cable routing
FORK	Fox 38 Float eBike optimized 29, Performance, 160mm travel, 1.5 tapered HT, Kabolt 15x110mm BOOST axle, minimum 180mm rotor, maximum 230mm rotor, 44mm rake, 58mm crown, GRIP, 3 position lever
SHIFTER	Sram GX AXS
REAR DERAILLEUR	Sram GX AXS 12sp
CRANKSET	Sram X-SYNC 2 Eagle Chainring, 34T FSA CK 320, 165mm
BOTTOM BRACKET	included in the motor
CHAIN	Sram GX Eagle, 12sp
CASSETTE / FREEWHEEL	Sram 10-52T

BRAKE	Magura MT 7
DISC ROTOR	Magura MDR-P Centerlock - 203 mm
FRONT HUB	Formula CL-811 for Center Lock, 32h, 15x110mm TA
REAR HUB	Formula CL-1481, for Center Lock, 32h, 12x148mm TA, XD, 4SB
RIM/WHEELSET	Velomann Tubeless Ready 29, 622x30, 32 hole
TIRE	Vittoria e-Barzo 29x2.6 XC-Trail TNT
STEM	Velomann, 50mm, 35mm, 11/8
HANDLEBAR	Velomann, width 780mm, diam.35mm, rise 18mm, backsweep 8°
GRIP / TAPE	T-One Rock T-GP34 single lock grip, TPR, 130mm, plastic inner body, aluminium clamp
SEATPOST	Velomann, diam.31,6mm, internal remote cable routing, 120mm/150mm travel - 120mm for size 43 - 150mm for sizes 48, 53
SADDLE	Velomann, carbon steel rail, 262x145
MOTOR UNIT	Bosch Performance Line CX, 250W, 85Nm, Kiox display
BATTERY	Bosch PowerTube 750Wh integrated battery

E-VERTIC FX-TYPE PRO | GX 12SP | YSBD5



The image shown is indicative only. Components and graphic detail may differ from actual model. Bianchi reserves the right to amend specifications and/or prices.

COLOR	E3 - Dark silver/antra-white decals
FRAME	e-VERTIC FX-Type Pro sizes: 43, 48, 53 - 12x148 mm thru axle dropouts - Post mount 180 disc brake type - 160mm travel front & rear - Internal cable routing in steerer
REAR SHOCK	RockShox Deluxe Select +, 230/65, DebonAir Progressive, Damer Type RT, Compression Tune L, Lockout Force 380, black finish tube, external rebound adjustment
SEATPOST CLAMP	custom seatpostclamp
HEADSET	Acros AIX-545 1.8 top / 1.5 - internal cable routing
FORK	RockShox ZEB 29, 160mm travel, 1.5 tapered HT, Maxle Ultimate 15x110mm BOOST axle, minimum 200mm rotor, maximum 220mm rotor, 44mm rake, 63mm crown, DebonAir
SHIFTER	Sram NX Eagle
REAR DERAILLEUR	Sram GX Eagle Rear Derailleur, 12sp
CRANKSET	Sram X-SYNC 2 Eagle Chainring, 34T FSA CK 320, 165mm
BOTTOM BRACKET	included in the motor
CHAIN	Sram GX EAGLE, 12sp

CASSETTE / FREEWHEEL	Sram XG-1275 Eagle Cassette, XD, 12sp, 10-12-14-16-18-21-24-28-32-36-42-52T
BRAKE	Magura MT Thirty
DISC ROTOR	Magura MDR-C Centerlock - 203 mm
FRONT HUB	Formula CL-811 for Center Lock, 32h, 15x110mm TA
REAR HUB	Formula CL-1481, for Center Lock, 32h, 12x148mm TA, XD, 4SB
RIM/WHEELSET	Velomann Tubeless Ready 29, 622x30, 32 hole
TIRE	Vittoria e-Barzo 29x2.6 XC-Trail TNT
STEM	Velomann, 50mm, 35mm, 11/8
HANDLEBAR	Velomann, width 780mm, diam.35mm, rise 18mm, backsweep 8°
GRIP / TAPE	T-One Rock T-GP34 single lock grip, TPR, 130mm, plastic inner body, aluminium clamp
SEATPOST	Velomann, diam.31,6mm, internal remote cable routing, 120mm/150mm travel - 120mm for size 43 - 150mm for sizes 48, 53
SADDLE	Velomann, carbon steel rail, 262x145
MOTOR UNIT	Bosch Performance Line CX, 250W, 85Nm, Kiox display
BATTERY	Bosch PowerTube 750Wh integrated battery

E-VERTIC FX-TYPE PRO | SX 12SP | YSBD4



The image shown is indicative only. Components and graphic detail may differ from actual model. Bianchi reserves the right to amend specifications and/or prices.

COLOR	E3 - Dark silver/antra-white decals
FRAME	e-VERTIC FX-Type Pro sizes: 43, 48, 53 - 12x148 mm thru axle dropouts - Post mount 180 disc brake type - 160mm travel front & rear - Internal cable routing in steerer
REAR SHOCK	RockShox Deluxe Select +, 230/65, DebonAir Progressive, Damer Type RT, Compression Tune L, Lockout Force 380, black finish tube, external rebound adjustment
SEATPOST CLAMP	custom seatpostclamp
HEADSET	Acros AIX-545 1.8 top / 1.5 - internal cable routing
FORK	RockShox 35 Silver TK 29, 160mm travel, 1.5 tapered HT, Maxle Stealth 15x110mm BOOST axle, minimum 180mm rotor, maximum 220mm rotor, 44mm rake, 61mm crown
SHIFTER	Sram SX Eagle
REAR DERAILLEUR	Sram SX Eagle Rear Derailleur, 12sp
CRANKSET	Sram X-SYNC 2 Eagle Chainring, 34T FSA CK 320, 165mm
BOTTOM BRACKET	included in the motor
CHAIN	Sram SX EAGLE, 12sp

CASSETTE / FREEWHEEL	Sram PG-1210 Eagle Cassette, HG, 12sp, 11-13-15-17-19-22-25-28-32-36-42-50T
BRAKE	Shimano, BL-M4100, BR-MT420
DISC ROTOR	Shimano, SM-RT30, L 203MM
FRONT HUB	Formula CL-811 for Center Lock, 32h, 15x110mm TA
REAR HUB	Formula CL-3248 for Center Lock, 32h, 12x148mm TA
RIM/WHEELSET	Velomann Tubeless Ready 29, 622x30, 32 hole
TIRE	Vittoria e-Barzo 29x2.6 XC-Trail TNT
STEM	Velomann, 50mm, 35mm, 11/8
HANDLEBAR	Velomann, width 780mm, diam.35mm, rise 18mm, backsweep 8°
GRIP / TAPE	T-One Rock T-GP34 single lock grip, TPR, 130mm, plastic inner body, aluminium clamp
SEATPOST	Velomann, diam.31,6mm, internal remote cable routing, 120mm/150mm travel - 120mm for size 43 - 150mm for sizes 48, 53
SADDLE	Velomann, carbon steel rail, 262x145
MOTOR UNIT	Bosch Performance Line CX, 250W, 85Nm, Kiox display
BATTERY	Bosch PowerTube 750Wh integrated battery


VELOMANN
BOSCH
BIANCHI
e-OMNIA
FLOAT
FOX
10 Nm
10 Nm
10 Nm

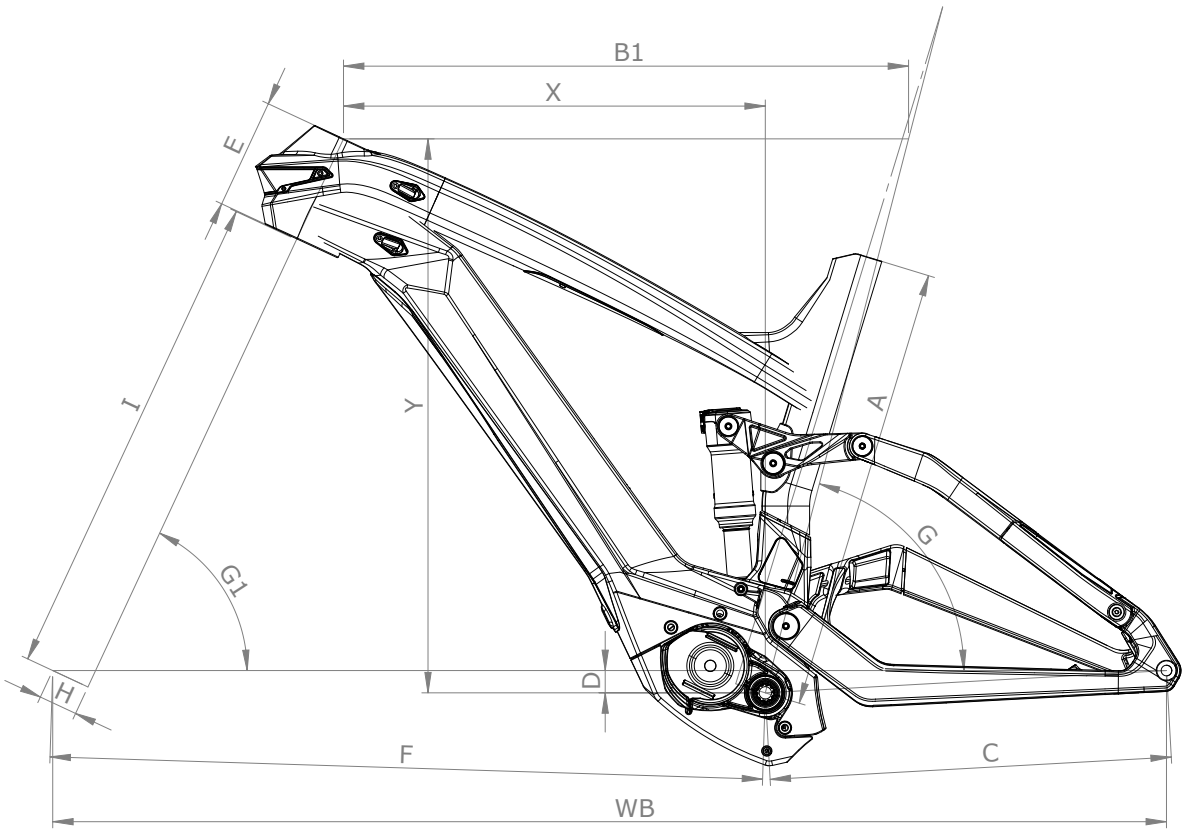

E-Omnia FX type													
SIZE	A	B1	C	D	E	F	G	G1	H	I	X	Y	WB
M	430	600	458	27	116	764	75.5°	65°	44	557	440	619	1221
L	480	620	457	27	121	786	75.5°	65°	44	557	459	623	1241
XL	530	640	455	27	126	806	75.5°	65°	44	557	477	627	1260

E-OMNIA FX TYPE KEY FEATURES

- Battery 625Wh
- Torque 85Nm
- 150mm full suspension
- Integrated front (40lux), rear and side led lights
- Visibility-range of 100 metres, and visibility to others at 500 metres.
- Bianchi custom mudguard
- Integrated seat clamp

E-OMNIA FX-TYPE | GX 12S P | YSB1FF



The image shown is indicative only. Components and graphic detail may differ from actual model. Bianchi reserves the right to amend specifications and/or prices.

COLOR	4J: Blue Navy-CK16 full glossy 4K: Dark graphite-grey full matt
FRAME	e-OMNIA FX-Type ALU sizes: 43, 48, 53 - 12x148 mm thru axle dropouts (special dropout for external derailleur) - Post mount 180 disc brake type - 160/150mm travel front - 150mm travel rear
REAR SHOCK	Fox Float, Performance, 185/55, EVOL, Shaft Trunnion, 3 position lever
SEATPOST CLAMP	custom integrated seatpostclamp
HEADSET	FSA NO.55R/558 1.5
FORK	Fox 36 Float eBike optimized 29, Rhythm, 160mm travel, 1.5 tapered HT, QR 15x110mm BOOST axle, minimum 180mm rotor, maximum 230mm rotor, 44mm rake, 58mm crown
SHIFTER	SRAM SX Eagle, 12sp
REAR DERAILLEUR	SRAM GX Eagle, 12sp
CRANKSET	FSA CK-762/IS Forged Alu crank 165 mm ISIS SRAM Eagle 34T
BOTTOM BRACKET	included in the motor
CHAIN	SRAM SX Eagle, 12sp
CASSETTE / FREEWHEEL	SRAM PG1210, 12sp, 11-50T

BRAKE	Shimano, BL-MT501, BR-MT520, 4 piston
DISC ROTOR	Shimano, SM-RT30, 203MM
RIM/WHEELSET	H1900 Spline 27,5 rear" 35mm & 29 front 30mm, 15x110TA front, 12x148TA rear , TL-ready rim w/ eyelets including tubeless band and valve, straight pull spokes, centerlock
TIRE	Front: Pirelli Scorpion E-MTB M 29x2.6 TLR, 60tpi Rear: Pirelli Scorpion E-MTB R 27.5x2.6 TLR, 60tpi
STEM	Velomann +/-0°, 1,1/8 x diam.35mm, 50mm for 15,17,19,21
HANDLEBAR	Velomann, width 780mm, diam.35mm, rise 18mm, backsweep 8°
GRIP / TAPE	T-One Rock T-GP34 single lock grip, TPR, 130mm, plastic inner body, aluminium clamp
SEATPOST	Velomann, diam.31,6mm, internal remote cable routing, 120mm/150mm travel
SADDLE	Velomann Gnd Full-fit Start Up, carbon steel rail, 262x145
FRONT LIGHT	Spanninga custom integrated light, 40 lux
REAR LIGHT	Spanninga custom integrated light
MOTOR UNIT	Oli EDGE, 90 Nm
BATTERY	630Wh integrated battery

E-OMNIA FX-TYPE | GX 12S P | YSB1F



The image shown is indicative only. Components and graphic detail may differ from actual model. Bianchi reserves the right to amend specifications and/or prices.

COLOR	4J: Blue Navy-CK16 full glossy 4K: Dark graphite-grey full matt
FRAME	e-OMNIA FX-Type ALU sizes: 43, 48, 53 - 12x148 mm thru axle dropouts (special dropout for external derailleur) - Post mount 180 disc brake type - 160/150mm travel front - 150mm travel rear
REAR SHOCK	Fox Float, Performance, 185/55, EVOL, Shaft Trunnion, 3 position lever
SEATPOST CLAMP	custom integrated seatpostclamp
HEADSET	FSA NO.55R/558 1.5
FORK	Fox 36 Float eBike optimized 29, Rhythm, 160mm travel, 1.5 tapered HT, QR 15x110mm BOOST axle, minimum 180mm rotor, maximum 230mm rotor, 44mm rake, 58mm crown
SHIFTER	SRAM SX Eagle, 12sp
REAR DERAILLEUR	SRAM GX Eagle, 12sp
CRANKSET	FSA CK-762/IS Forged Alu crank 165 mm ISIS SRAM Eagle 34T
BOTTOM BRACKET	included in the motor
CHAIN	SRAM SX Eagle, 12sp
CASSETTE / FREEWHEEL	SRAM PG1210, 12sp, 11-50T

BRAKE	Shimano, BL-MT501, BR-MT520, 4 piston
DISC ROTOR	Shimano, SM-RT30, 203MM
FRONT HUB	Formula CL-811 for Center Lock, 32h, 15x110mm TA
REAR HUB	Formula CL-3248 for Center Lock, 32h, 12x148mm TA
RIM/WHEELSET	Velomann E30 Tubeless Ready 29, 622x30, 32 hole Velomann E30 Tubeless Ready 27.5, 584x30, 32 hole
TIRE	Front: Pirelli Scorpion E-MTB M 29x2.6 TLR, 60tpi Rear: Pirelli Scorpion E-MTB R 27.5x2.6 TLR, 60tpi
STEM	Velomann +/-0°, 1,1/8 x diam.35mm, 50mm for 15,17,19,21
HANDLEBAR	Velomann, width 780mm, diam.35mm, rise 18mm, backsweep 8°
GRIP / TAPE	T-One Rock T-GP34 single lock grip, TPR, 130mm, plastic inner body, aluminium clamp
SEATPOST	Velomann, diam.31,6mm, internal remote cable routing, 120mm/150mm travel
SADDLE	Velomann Gnd Full-fit Start Up, carbon steel rail, 262x145
FRONT LIGHT	Spanninga custom integrated light, 40 lux
REAR LIGHT	Spanninga custom integrated light
MOTOR UNIT	Oli EDGE, 90 Nm
BATTERY	630Wh integrated battery

E-VERTIC FX-TYPE | GX 12SP | YTBA9



The image shown is indicative only. Components and graphic detail may differ from actual model. Bianchi reserves the right to amend specifications and/or prices.

COLOR	EJ - GRAPHITE/CK16 full MATT E6 - GRAPHITE/GREEN full MATT E4 - Black / CK16 full MATT V6 - Graphite / Sage full MATT
FRAME	e-VERTIC FX-Type ALU sizes: 43, 48, 53 - 12x148 mm thru axle dropouts - Post mount 180 disc brake type - 140mm travel front & rear - Internal cable routing in steerer
REAR SHOCK	RockShox Deluxe Select, 210/55, DebonAir Progressive, Damper Type R, Compression tune L, Lockout Force n/a, black finish tube, external rebound adjustment"
SEATPOST CLAMP	custom seatpostclamp
HEADSET	Acros AZX-670 1.8 top / 1.5 - internal cable routing
FORK	RockShox Lyric 29, 140mm travel, 1.5 tapered HT, Maxle Stealth 15x110mm BOOST axle, minimum 180mm rotor, maximum 220mm rotor, 44mm rake, 59mm crown
SHIFTER	Sram GX Eagle Trigger Shifter
REAR DERAILLEUR	Sram GX Eagle Rear Derailleur, 12sp
CRANKSET	FSA E-Bike Diecast Crankset ISIS / 165mm / Die cast aluminum Sram X-SYNC 2 Eagle Chainring, 34T
BOTTOM BRACKET	included in the motor
CHAIN	Sram SX EAGLE, 12sp

CASSETTE / FREEWHEEL	Sram PG-1210 Eagle Cassette, HG, 12sp, 11-13-15-17-19-22-25-28-32-36-42-50T
BRAKE	Magura MT Thirty
DISC ROTOR	Magura MDR-C Centerlock - 203 mm
FRONT HUB	Formula CL-811 for Center Lock, 32h, 15x110mm TA
REAR HUB	Formula CL-3248 for Center Lock, 32h, 12x148mm TA
RIM/WHEELSET	Velomann X30 Tubeless Ready 29, 622x30, 32 hole
TIRE	Vittoria e-Barzo 29x2.6 XC-Trail TNT
STEM	Velomann, 50mm, 35mm, 11/8
HANDLEBAR	Velomann, width 780mm, diam.35mm, rise 18mm, backsweep 8°
GRIP / TAPE	T-One Rock T-GP34 single lock grip, TPR, 130mm, plastic inner body, aluminium clamp
SEATPOST	Velomann, diam.31,6mm, internal remote cable routing, 120mm/150mm travel - 120mm for size 43 - 150mm for sizes 48, 53
SADDLE	Velomann, carbon steel rail, 262x145
MOTOR UNIT	Bosch Performance Line CX, 250W, 85Nm, Kiox display
BATTERY	Bosch PowerTube 750Wh integrated battery

E-VERTIC FX-TYPE | SX 12SP | YSBA8



The image shown is indicative only. Components and graphic detail may differ from actual model. Bianchi reserves the right to amend specifications and/or prices.

COLOR	EJ - GRAPHITE/CK16 full MATT E6 - GRAPHITE/GREEN full MATT E4 - Black / CK16 full MATT V6 - Graphite / Sage full MATT
FRAME	e-VERTIC FX-Type sizes: 43, 48, 53 - 12x148 mm thru axle dropouts - Post mount 180 disc brake type - 140mm travel front & rear - Internal cable routing in steerer
REAR SHOCK	RockShox Deluxe Select, 210/55, DebonAir Progressive, Damper Type R, Compression tune L, Lockout Force n/a, black finish tube, external rebound adjustment"
SEATPOST CLAMP	custom seatpostclamp
HEADSET	Acros AZX-670 1.8 top / 1.5 - internal cable routing
FORK	RockShox 35 Silver TK 29, 140mm travel, 1.5 tapered HT, Maxle Stealth 15x110mm BOOST axle, minimum 180mm rotor, maximum 220mm rotor, 44mm rake, 61mm crown, Solo Air
SHIFTER	Sram SX Eagle
REAR DERAILLEUR	Sram SX Eagle, 12sp
CRANKSET	FSA E-Bike Diecast Crankset ISIS / 165mm / Die cast aluminum Sram X-SYNC 2 Eagle Chainring, 34T
BOTTOM BRACKET	included in the motor

CHAIN	Sram SX EAGLE, 12sp
CASSETTE / FREEWHEEL	Sram PG-1210 Eagle Cassette, HG, 12sp, 11-13-15-17-19-22-25-28-32-36-42-50T
BRAKE	Shimano, BL-M4100, BR-MT420
DISC ROTOR	Shimano, SM-RT30, L 203MM
FRONT HUB	Formula CL-811 for Center Lock, 32h, 15x110mm TA
REAR HUB	Formula CL-3248 for Center Lock, 32h, 12x148mm TA
RIM/WHEELSET	Velomann Tubeless Ready 29, 622x30, 32 hole
TIRE	Vittoria e-Barzo 29x2.6 XC-Trail TNT
STEM	Velomann, 50mm, 35mm, 11/8
HANDLEBAR	Velomann, width 780mm, diam.35mm, rise 18mm, backsweep 8°
GRIP / TAPE	T-One Rock T-GP34 single lock grip, TPR, 130mm, plastic inner body, aluminium clamp
SEATPOST	Velomann, diam.31,6mm, internal remote cable routing, 120mm/150mm travel - 120mm for size 43 - 150mm for sizes 48, 53
SADDLE	Velomann, carbon steel rail, 262x145
MOTOR UNIT	Bosch Performance Line CX, 250W, 85Nm, Kiox display
BATTERY	Bosch PowerTube 750Wh integrated battery

T-TRONIK FX-TYPE PRO | XT DEORE 12SP | YSBU5



The image shown is indicative only. Components and graphic detail may differ from actual model. Bianchi reserves the right to amend specifications and/or prices.

COLOR	4X - MaskCK16+decH20+Fullmatt
FRAME	T-Tronik FX-Type Pro carbon sizes: 40, 44, 48, 52 - 12x148 mm thru axle dropouts - Post mount 180 disc brake type - 150mm travel front & rear - Internal cable routing in DT
REAR SHOCK	Fox Float DPS Performance, LV, EVOL, 3 position Lever
SEATPOST CLAMP	Custom seatpost clamp
HEADSET	FSA NO.77R 1.5"
FORK	RockShox YARI RC 29", 150mm travel, 1.5 tapered HT, Maxle Stealth 15x110mm BOOST axle, minimum 180mm rotor, maximum 220mm rotor, 42mm rake, 59mm crown
SHIFTER	Shimano Deore SL-M6100, 12sp
REAR DERAILLEUR	Shimano Deore XT RD-M8100, 12sp
CRANKSET	Shimano FC-EM600, 165MM Shimano Chainring SM-CRE80-12-B, 34T
CHAIN	Shimano, CN-M6100
CASSETTE / FREEWHEEL	Shimano CS-M7100-12, SLX, 12sp, 10-12-14-16-18-21-24-28-33-39-45-51T
BRAKE	'Shimano, BL-M6100, BR-M6120, 4 pistons

DISC ROTOR	'Shimano SM-RT64, RT-EM600, L 203MM
FRONT HUB	Formula CL-811 for Center Lock, 32h 15x110mm TA
REAR HUB	Shimano FH-MT510-B, for Center Lock, 32h, 12x148 TA
RIM/WHEELSET	Velomann 29", 622x30, 32 hole
TIRE	Kenda Hellkat 29x2.6, 60tpi, 66-622
STEM	Velomann +/-0°, 1,1/8 x diam.35mm, 50mm
HANDLEBAR	Velomann width 780mm, diam.35mm, rise 20mm, backsweep 9°
GRIP / TAPE	T-One Rock T-GP34 single lock grip , TPR, plastic inner body, aluminium clamp
SEATPOST	JD, diam.31,6mm, internal remote cable routing 100m travel --> size 40 125m travel --> size 44 150m travel --> sizes 48, 52
SADDLE	Fizik Alpaca Terra, S alloy rail, 249x145
MOTOR UNIT	'Shimano EP8, 250W, 85Nm, Display SC-EM800
BATTERY	'Integrated battery 630Wh

E-OMNIA X-TYPE | DEORE 11S P | YTB2A



The image shown is indicative only. Components and graphic detail may differ from actual model. Bianchi reserves the right to amend specifications and/or prices.

COLOR	4A / CK16-dark celeste full matt 4B / Metal orange-graphite full matt
FRAME	e-OMNIA X-Type ALU sizes: 43, 48, 53 - 12x148 mm thru axle dropouts (special dropout for external derailleur) - Post mount 180 disc brake type - 120mm travel front
SEATPOST CLAMP	custom integrated seatpostclamp
HEADSET	FSA NO.55R/558 1.5
FORK	XCR34 AIR Boost LOR DS 29" 120mm, with LOR, 1.5" tapered HT, alloy crown, Air spring w/pre-load adjust, 34mm black stanchions, PM 180mm disc mount, 15X110 TA 15AH2-110, matt finish
SHIFTER	Shimano DEORE SL-M5100, 11sp
REAR DERAILLEUR	Shimano DEORE RD-M5100, 11sp
CRANKSET	FSA CK-320/IS Alu crank 165 mm ISIS Sram FSA Mega Thoot 34T
BOTTOM BRACKET	included in the motor
CHAIN	KMC e 11T EPT

CASSETTE / FREEWHEEL	Shimano, CS-M5100-11, 11-13-15-18-21-24-28-33-39-45-51T
BRAKE	Shimano, BL-M4100, BR-MT410
DISC ROTOR	Shimano, SM-RT10, M 180MM
FRONT HUB	Formula CL-811 for Center Lock, 32h, 15x110mm TA
REAR HUB	Formula CL-3248 for Center Lock, 32h, 12x148mm TA
RIM/WHEELSET	Velomann 29, 30mm 29
TIRE	Kenda Booster 29x2.6, 30tpi
STEM	Velomann +/-0°, 1,1/8 x diam.31,8mm, 55mm for 15,17,19,21
HANDLEBAR	Velomann, width 740mm, diam.31.8mm, rise 15mm, backsweep 9°
GRIP / TAPE	T-One Rock T-GP34 single lock grip, TPR, 130mm, plastic inner body, aluminium clamp
SEATPOST	Velomann, lenght 350mm for SM size and 400mm for MD, LG, diam.31,6mm, 0mm seatback
SADDLE	Velomann Gnd Full-fit Start Up, carbon steel rail, 262x145
FRONT LIGHT	Spanninga custom integrated light, 40 lux
REAR LIGHT	Spanninga custom integrated light
MOTOR UNIT	Oli EDGE, 90 Nm
BATTERY	630Wh integrated battery

E-VERTIC X-TYPE | DEORE 10SP | YSBA6



The image shown is indicative only. Components and graphic detail may differ from actual model. Bianchi reserves the right to amend specifications and/or prices.

COLOR	TC: Black/CK16 TH: Black/White
FRAME	e-VERTIC X-Type ALU sizes: 43, 48, 53 - 9x135 mm quick release dropouts - Post mount 180 disc brake type - 120mm travel front - Internal cable routing in steerer - 625Wh compatible
HEADSET	Acros AZF-575 1.8 top / 1.5 bottom - bearings - internal cable routing
FORK	Suntour XCR34-AIR-Boost LOR DS 15QLC32-110 29, 120mm travel, 1.5 tapered HT, Thru Axle 15QLC32-110, minimum 180mm rotor, maximum 203mm rotor, Damper Type LOR, 34mm stanchions, Air
SHIFTER	Shimano, SL-M4100-R, DEORE, 10-SPEED
REAR DERAILLEUR	Shimano, RD-M4120, DEORE, SGS 10/11-SPEED
CRANKSET	FSA CK-320/IS/Gen4 FSA E-Bike Diecast Crankset ISIS / 165mm / Die cast aluminum , FSA Steel MegaTooth Chainring 34T
BOTTOM BRACKET	included in the motor
CHAIN	KMC e10S NPBK, 1/2 x 11/128
CASSETTE / FREEWHEEL	Sunrace, 10sp, 11-46T

BRAKE	Promax DSK-925
DISC ROTOR	Promax DSK-925, 180mm, center lock
FRONT HUB	Formula CL-811 for Center Lock, 32h, 15x110mm TA
REAR HUB	Formula CL-1422, CENTER LOCK, FOR SHIMANO MTB 8/ 9/ 10/ 11-SPEED - O.L.D. 135 mm - AXLE 145 mm
RIM/WHEELSET	Velomann E-Sport Tubeless Ready 29, 622x25, 32 hole
TIRE	Chaoyang Phantom dry 29x2.3, 60tpi
STEM	Velomann Viper0, 60mm, 31.8 mm, 11/8
HANDLEBAR	Velomann MTB479A, width 740mm, diam 31.8mm, rise 15mm, backsweep 9°
GRIP / TAPE	T-One Rock T-GP34 single lock grip, TPR, 130mm
SEATPOST	Velomann, diam.31,6mm, 0mm seatback, 300mm size 43 350mm size 48 400mm size 53
SADDLE	Velomann Gnd Full-fit Start Up, carbon steel rail, 262x145
MOTOR UNIT	Bosch Performance Line CX, with Purion display
BATTERY	Bosch Powertube 625Wh integrated battery

E-VERTIC X-TYPE | DEORE 10SP | YSBA6

TH: Black/White



The image shown is indicative only. Components and graphic detail may differ from actual model. Bianchi reserves the right to amend specifications and/or prices.

E-TOURER


VELOMANN
BIANCHI
SUPER MOTO

E-VERTIC FT TYPE

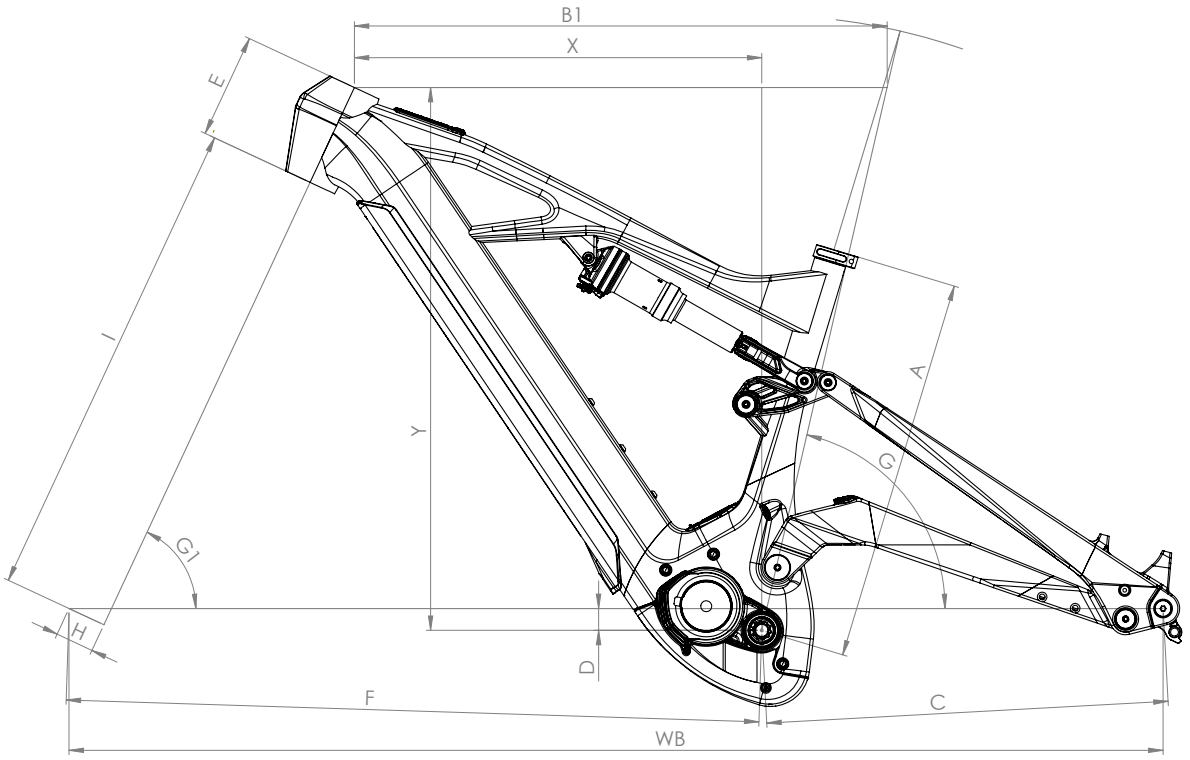

E-Vertic FT Type													
Size	A	B1	C	D	E	F	G	G1	H	I	X	Y	WB
M	438	611	461	25	120	794	77°	65°	44	559	467	622	1254
L	480	636	461	25	130	822	77°	65°	44	559	490	631	1281
XL	530	659	461	25	145	848	77°	65°	44	559	510	645	1307

E-VERTIC FT TYPE KEY FEATURES

- Battery 750Wh
- Torque 85Nm
- 140mm full suspension

E-VERTIC FT-TYPE | SX 12SP | YSBC5



The image shown is indicative only. Components and graphic detail may differ from actual model. Bianchi reserves the right to amend specifications and/or prices.

COLOR	4V - Gold Stone / Graphite Race full GLOSSY 5V - Smerald Green / Graphite Race full MATT RV - Brown / Graphite Race full MATT 3U - Stone gold/Graphite - MATT EH - Green/Black - MATT
FRAME	e-VERTIC FT-Type ALU sizes: 43, 48, 53 - 12x148 mm thru axle dropouts - Post mount 180 disc brake type - 140mm travel front & rear - Internal cable routing in steerer
REAR SHOCK	RockShox Deluxe Select, 210/55, DebonAir Progressive, Damper Type R, Compression tune L, Lockout Force n/a, black finish tube, external rebound adjustment"
SEATPOST CLAMP	custom seatpostclamp
HEADSET	Acros AZX-670 1.8 top / 1.5 - internal cable routing
FORK	RockShox Recon Silver RL 29, 140mm travel, 1.5 tapered HT, Maxle Lite 15x110mm BOOST axle, minimum 160mm rotor, maximum 220mm rotor, 42mm rake, 61mm crown, Solo Air, extl rebnd, 32mm stanchions
SHIFTER	Sram SX Eagle
REAR DERAILLEUR	Sram SX Eagle Rear Derailleur, 12sp
CRANKSET	FSA CK-320/IS/Gen4 FSA E-Bike Diecast Crankset ISIS / 165mm / Die cast aluminum Sram X-SYNC 2 Eagle Chainring, 34T
BOTTOM BRACKET	included in the motor
CHAIN	Sram SX EAGLE, 12sp
CASSETTE / FREEWHEEL	Sram PG-1210 Eagle Cassette, HG, 12sp, 11-13-15-17-19-22-25-28-32-36-42-50T
BRAKE	Shimano, BL-M4100, BR-MT420, RESIN PAD
DISC ROTOR	Shimano, SM-RT30, L 203MM Shimano, SM-RT30, M 180MM

FRONT HUB	Formula CL-811 for Center Lock, 32h, 15x110mm TA
REAR HUB	Formula CL-3248 for Center Lock, 32h, 12x148mm TA, HG, 2SB
RIM/WHEELSET	Velomann E-Sport Tubeless Ready 29, 25-622, 32 hole
TIRE	Schwalbe SUPERMOTO perf DD.raceguard 62-622 (29x2.4)
STEM	Velomann, 50mm, 35mm, 11/8
HANDLEBAR	Velomann, width 780mm, diam.35mm, rise 18mm, backsweep 8°
GRIP / TAPE	T-One Rock T-GP34 single lock grip, TPR, 130mm, plastic inner body, aluminium clamp
SEATPOST	Velomann, lenght 350mm for SM size and 400mm for MD, diam.31,6mm, 0mm seatback
SADDLE	Velomann 260x160mm, 365gr.
PEDALS	Fasten, w/ED steel cage, Boron ED black axle, BS reflector
CHAINRING PROTECTOR	w/out chainring protector
FRONT LIGHT	Lezyne, 115 lux, 310 lumen
REAR LIGHT	Trelock RearLight MudGuard Ebike6-12V
REAR CARRIER / PLATE	Racktime luggage stay set, 29, Max load 15Kg
KICKSTAND	Bianchi Custom
MUDGUARD / STAY	Racktime Alumee 72mm, 28
MOTOR UNIT	Bosch Performance Line CX, Kiox display
BATTERY	Bosch Powertube 750Wh integrated battery

E-VERTIC FT-TYPE | SX 12SP | YSBC5

EH – Deep Green/Graphite Full Matt



The image shown is indicative only. Components and graphic detail may differ from actual model. Bianchi reserves the right to amend specifications and/or prices.


e-OMNIA
BIANCHI
VELOMANN
BIANCHI
e-OMNIA

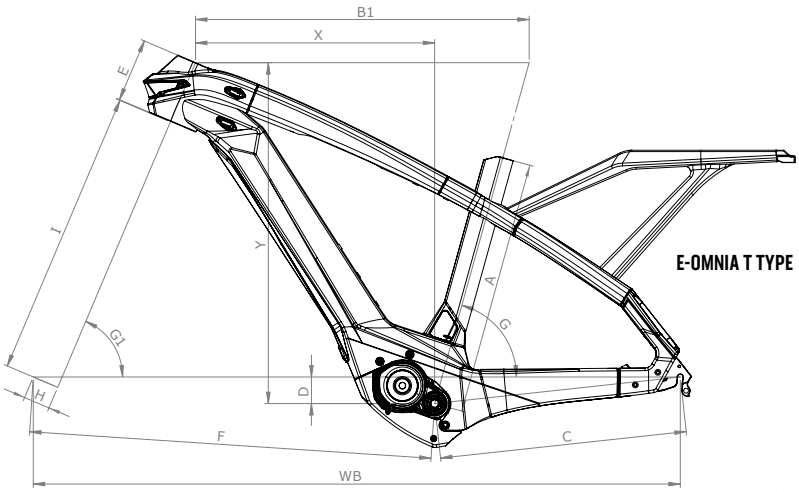

E-OMNIA T TYPE

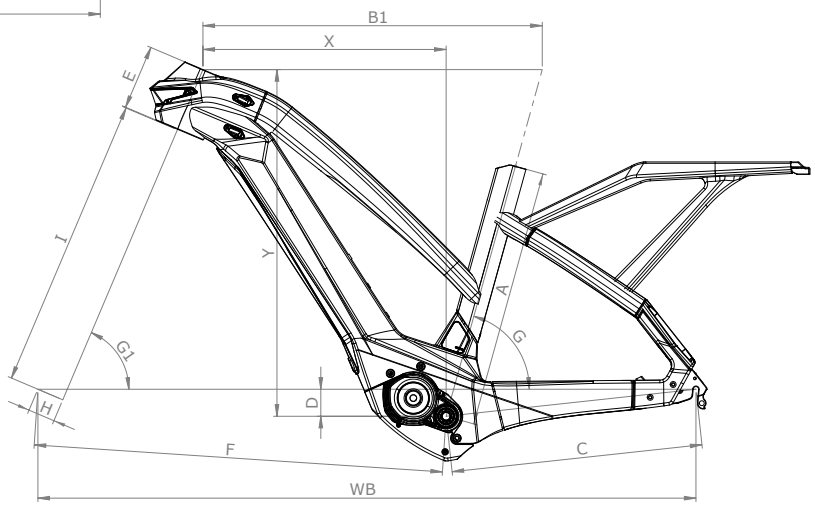

E-OMNIA T TYPE STEP-THROUGH

E-Omnia T Type													
SIZE	A	B1	C	D	E	F	G	G1	H	I	X	Y	WB
M	440	607	465	50	116	732	74.5°	67°	47	541	430	637	1192
L	480	628	465	50	121	753	74.5°	67°	47	541	450	641	1214
XL	520	649	465	50	126	775	74.5°	67°	47	541	470	646	1236

E-OMNIA T-TYPE KEY FEATURES

- Battery options 500Wh/625Wh
- Torque 85Nm
- Integrated front (40lux), rear and side led lights.
- Visibility-range of 100 metres, and visibility to others at 500 metres.
- Bianchi custom mudguard
- Integrated seat clamp

E-OMNIA T-TYPE | XT 12SP | YSBE4



The image shown is indicative only. Components and graphic detail may differ from actual model. Bianchi reserves the right to amend specifications and/or prices.

COLOR	4D - CK16 / Dark Celeste full MATT 4E - Metal Brown / Graphite full MATT 4F - Metal Grey / Graphite full MATT
FRAME	E-OMNIA T-Type chain drive ALU sizes: 43-48-53 - 12x148mm thru-axle dropouts (special dropout for external derailleur) - Post mount 180 disc brake type - Internal cable routing in DT - Frame lock compatiblex - 625Wh compatible - custom rear carrier integrated in the frame design
SEATPOST CLAMP	custom integrated seatpostclamp
HEADSET	FSA NO.55R/558 1.5
FORK	Suntour XCM34-Boost NLO DS 29, 120mm travel, 1.5 tapered HT, w/ 15AH2-110 TA, minimum 160mm rotor, maximum 203mm rotor, 34mm stanchions
SHIFTER	Shimano, SL-M6100-R, RIGHT, 12-SPEED
REAR DERAILLEUR	Shimano, RD-M8100, XT, SGS 12-SPEED
CRANKSET	FSA CK-320/IS Die cast AL crank 170mm ISIS, FSA MegaTooth 38T
BOTTOM BRACKET	included in the motor
CHAIN	Shimano, CN-M6100
CASSETTE / FREEWHEEL	Shimano, CS-M6100-12, DEORE, 12-SPEED, 10-12-14-16-18-21-24-28-33-39-45-51T
BRAKE	Promax, DSK-925
DISC ROTOR	Promax DSK-925, 180mm, center lock
FRONT HUB	Formula CL-811 for Center Lock, 32h, 15x110mm TA

REAR HUB	Shimano, FH-MT410-B, 12-SPEED FOR 12MM THRU TYPE AXLE, 32H OLD:148MM
RIM/WHEELSET	Velomann E-Sport Tubeless Ready 29, 25-622, 32 hole
TIRE	Vittoria e-Randonneur, 50-622
STEM	Velomann 35,3D FORGED 0°>90° L70MM
HANDLEBAR	Velomann 31.8/680mm, RISE 20MM, SWEEP 15°
GRIP / TAPE	Herrmans Grip
SEATPOST	Velomann 31.6*350, suspension seatpost
SADDLE	Velomann, 285x187mm, 399gr
PEDALS	VP, axle 7mm boron steel, EPB system size 116x103mm with reflector, ED black
FRONT LIGHT	Spanninga custom integrated light, 40 lux
REAR LIGHT	Spanninga custom integrated light
REAR CARRIER / PLATE	custom rear carrier integrated into the frame design
KICKSTAND	Velomann load 35kg
MUDGUARD / STAY	SKS PET Mudguards A65 R /28
MOTOR UNIT	Bosch Performance Line CX, 250W, 85Nm, Kiox display
BATTERY	Bosch Powertube 625Wh integrated battery

E-OMNIA T-TYPE ST | XT 12SP | YR/YSBE5



The image shown is indicative only. Components and graphic detail may differ from actual model. Bianchi reserves the right to amend specifications and/or prices.

COLOR	4D - CK16 / Dark celeste full MATT 4E - Metal Brown / Graphite full MATT 4F - Metal Grey / Graphite full MATT 3F - Bordeaux full GLOSSY 3I - Kind of Blue full GLOSSY BK - Black full GLOSSY WW - White full GLOSSY
FRAME	E-OMNIA T-Type Step-through chain drive ALU sizes: 43-48-53 - 12x148mm thru-axle dropouts (special dropout for external derailleur) - Post mount 180 disc brake type - Internal cable routing in DT - Frame lock compatible - 625Wh compatible - custom rear carrier integrated in the frame design
SEATPOST CLAMP	custom integrated seatpostclamp
HEADSET	FSA NO.55R/558 1.5
FORK	Suntour XCM34-Boost NLO DS 29, 120mm travel, 1.5 tapered HT, w/ 15AH2-110 TA, minimum 160mm rotor, maximum 203mm rotor, 34mm stanchions
SHIFTER	Shimano, SL-M6100-R, RIGHT, 12-SPEED
REAR DERAILLEUR	Shimano, RD-M8100, XT, SGS 12-SPEED
CRANKSET	FSA CK-320/IS Die cast AL crank 170mm ISIS, FSA MegaTooth 38T
BOTTOM BRACKET	included in the motor
CHAIN	Shimano, CN-M6100
CASSETTE / FREEWHEEL	Shimano, CS-M6100-12, DEORE, 12-SPEED, 10-12-14-16-18-21-24-28-33-39-45-51T
BRAKE	Promax, DSK-925

DISC ROTOR	Promax DSK-925, 180mm, center lock
FRONT HUB	Formula CL-811 for Center Lock, 32h, 15x110mm TA
REAR HUB	Shimano, FH-MT410-B, 12-SPEED FOR 12MM THRU TYPE AXLE, 32H OLD:148MM
RIM/WHEELSET	Velomann E-Sport Tubeless Ready 29, 25-622, 32 hole
TIRE	Vittoria e-Randonneur, 50-622
STEM	Velomann 35,3D FORGED 0°>90° L70MM
HANDLEBAR	Velomann 31.8/680mm, RISE 20MM, SWEEP 15°
GRIP / TAPE	Herrmans Grip
SEATPOST	Velomann 31.6*350, suspension seatpost
SADDLE	Velomann, 285x187mm, 399gr
PEDALS	VP, axle 7mm boron steel, EPB system size 116x103mm with reflector, ED black
FRONT LIGHT	Spanninga custom integrated light, 40 lux
REAR LIGHT	Spanninga custom integrated light
REAR CARRIER / PLATE	custom rear carrier integrated into the frame design
KICKSTAND	Velomann load 35kg
MUDGUARD / STAY	SKS PET Mudguards A65 R /28
MOTOR UNIT	Bosch Performance Line CX, 250W, 85Nm, Kiox display
BATTERY	Bosch Powertube 625Wh integrated battery

E-OMNIA T-TYPE | NEXUS 5SP | YSBE6



The image shown is indicative only. Components and graphic detail may differ from actual model. Bianchi reserves the right to amend specifications and/or prices.

COLOR	4D - CK16/dark celeste full MATT 4E - Metal Brown/Graphite full MATT 4F - Metal grey/graphite full MATT
FRAME	E-OMNIA T-Type belt drive ALU sizes: 43-48-53 - IG 135 mm quick release dropouts (special dropout for internal gear) - Post mount 180 disc brake type - Internal cable routing in DT - Frame lock compatible - 625Wh compatible - custom rear carrier integrated in the frame design
SEATPOST CLAMP	custom integrated seatpostclamp
HEADSET	FSA NO.55R/558 1.5
FORK	RockShox Recon Silver RL 29, 120mm travel, 1.5 tapered HT, Maxle Stealth 15x110mm BOOST axle, minimum 160mm rotor, maximum 220mm rotor, 42mm rake, 61mm crown, Solo Air, extl rebnd, 32mm stanchions
SHIFTER	Shimano, SL-C7000-5, NEXUS, REVO SHIFTER, 5-SPEED
CRANKSET	FSA E-Bike Diecast Crankset ISIS / 170mm / Die cast aluminum
BOTTOM BRACKET	included in the motor
CHAIN	CDXB118, CDX Belt Gates Carbon Drive, 118T, black 1298 mm Length, 11 mm Pitch, 12 mm Width
CASSETTE / FREEWHEEL	Shimano Nexus 5 Mech, CDX Rear Sprocket, 28T
BRAKE	Promax, DSK-925

DISC ROTOR	Promax DSK-925, 180mm, center lock
FRONT HUB	Formula CL-811 for Center Lock, 32h, 15x110mm TA
REAR HUB	Shimano, SG-C7000-5D, NEXUS, 5-SPEED, FOR CENTER LOCK DISC BRAKE, 32H 135X187MM
RIM/WHEELSET	Velomann E-Sport Tubeless Ready 29, 25-622, 32 hole
TIRE	Vittoria e-Randonneur, 50-622
STEM	Velomann 35,3D FORGED 0°>90° L70MM
HANDLEBAR	Velomann 31.8/680mm, RISE 20MM, SWEEP 15°
GRIP / TAPE	Herrmans Grip
SEATPOST	Velomann 31.6*350, suspension seatpost
SADDLE	Velomann, 285x187mm, 399gr
PEDALS	VP, axle 7mm boron steel, EPB system size 116x103mm with reflector, ED black
FRONT LIGHT	Spanninga custom integrated light, 40 lux
REAR LIGHT	Spanninga custom integrated light
REAR CARRIER / PLATE	custom rear carrier integrated into the frame design
KICKSTAND	Velomann load 35kg
MUDGUARD / STAY	SKS PET Mudguards A65 R /28
MOTOR UNIT	Bosch Performance Line CX, 250W, 85Nm, Kiox display
BATTERY	Bosch Powertube 625Wh integrated battery

E-OMNIA T-TYPE ST | NEXUS 5SP | YR/YSBE7



The image shown is indicative only. Components and graphic detail may differ from actual model. Bianchi reserves the right to amend specifications and/or prices.

COLOR	4D - CK16/dark celeste full MATT 4E - Metal Brown/Graphite full MATT 4F - Metal grey/graphite full MATT BK - Black full GLOSSY
FRAME	E-OMNIA T-Type Step-through belt drive ALU sizes: 43-48-53 - IG 135 mm quick release dropouts (special dropout for internal gear) - Post mount 180 disc brake type - Internal cable routing in DT - Frame lock compatible - 625Wh compatible - custom rear carrier integrated in the frame design
SEATPOST CLAMP	custom integrated seatpostclamp
HEADSET	FSA NO.55R/558 1.5
FORK	RockShox Recon Silver RL 29, 120mm travel, 1.5 tapered HT, Maxle Stealth 15x110mm BOOST axle, minimum 160mm rotor, maximum 220mm rotor, 42mm rake, 61mm crown, Solo Air, extl rebnd, 32mm stanchions
SHIFTER	Shimano, SL-C7000-5, NEXUS, REVO SHIFTER, 5-SPEED
CRANKSET	FSA E-Bike Diecast Crankset ISIS / 170mm / Die cast aluminum
BOTTOM BRACKET	included in the motor
CHAIN	CDXB118, CDX Belt Gates Carbon Drive, 118T, black 1298 mm Length, 11 mm Pitch, 12 mm Width
CASSETTE / FREEWHEEL	Shimano Nexus 5 Mech, CDX Rear Sprocket, 28T

BRAKE	Promax, DSK-925
DISC ROTOR	Promax DSK-925, 180mm, center lock
FRONT HUB	Formula CL-811 for Center Lock, 32h, 15x110mm TA
REAR HUB	Shimano, SG-C7000-5D, NEXUS, 5-SPEED, FOR CENTER LOCK DISC BRAKE, 32H 135X187MM
RIM/WHEELSET	Velomann E-Sport Tubeless Ready 29, 25-622, 32 hole
TIRE	Vittoria e-Randonneur, 50-622
STEM	Velomann 35,3D FORGED 0°>90° L70MM
HANDLEBAR	Velomann 31.8/680mm, RISE 20MM, SWEEP 15°
GRIP / TAPE	Herrmans Grip
SEATPOST	Velomann 31.6*350, suspension seatpost
SADDLE	Velomann, 285x187mm, 399gr
PEDALS	VP, axle 7mm boron steel, EPB system size 116x103mm with reflector, ED black
FRONT LIGHT	Spanninga custom integrated light, 40 lux
REAR LIGHT	Spanninga custom integrated light
REAR CARRIER / PLATE	custom rear carrier integrated into the frame design
KICKSTAND	Velomann load 35kg
MUDGUARD / STAY	SKS PET Mudguards A65 R /28
MOTOR UNIT	Bosch Performance Line CX, 250W, 85Nm, Kiox display
BATTERY	Bosch Powertube 625Wh integrated battery

E-VERTIC T-TYPE ST | DEORE 10SP | YSBC4



The image shown is indicative only. Components and graphic detail may differ from actual model. Bianchi reserves the right to amend specifications and/or prices.

COLOR	E8 - Gold Stone / Graphite Race full GLOSSY EG - Green / Black full GLOSSY SV - Grey / Graphite full GLOSSY
FRAME	e-VERTIC T-Type Step-through ALU sizes: 43, 48, 53 - 9x135 mm quick release dropouts - Post mount 180 disc brake type - Internal cable routing in steerer - 625Wh compatible
SEATPOST CLAMP	custom integrated seatpostclamp
HEADSET	Acros Headset 1,5 top / 1,5 - integrated cable routing
FORK	Suntour NVX30 NLO DS 29, 100mm travel, 1.1/8 straight HT, w/out 9x100 QR, minimum 160mm rotor, maximum 180mm rotor, 30mm stanchions
SHIFTER	Shimano, SL-M4100-R, DEORE, 10-SPEED
REAR DERAILLEUR	Shimano, RD-M4120, DEORE, SGS 10/11-SPEED
CRANKSET	FSA E-Bike Diecast Crankset Gen 3 / 170mm / Die cast aluminum
BOTTOM BRACKET	included in the motor
CHAIN	KMC e10S NPBK
CASSETTE / FREEWHEEL	Sunrace, 10sp, 11-42T
BRAKE	Promax, DSK-925
DISC ROTOR	Promax DSK-925, 180mm, center lock
FRONT HUB	Shimano, HB-TX505,32H OLD:100MM AXLE:108MM, QR:133MM
REAR HUB	Shimano, FH-TX505-8, 32H 8/9/10/11-SPEED,OLD:135MM,AXLE:146MM,QR:170MM
RIM/WHEELSET	EBIKE 650 TR 28 - ETRTO 622 x 23C, 32hole, height 18mm

TIRE	Continental 55-622 eContact Plus
STEM	Velomann aluminium adjustable, integrated cable routing, Barbore 31,8 mm, Extension 90 mm
HANDLEBAR	Velomann 31.8/680mm, RISE 20MM, SWEEP 15°
GRIP / TAPE	Herrmans GRIPset Oxy
SEATPOST	Velomann travel 50mm, suspension seatpost 300 for size 43 350 for sizes 48, 53
SADDLE	Velomann, size 270x162mm, 385gr.
PEDALS	VP, axle 7mm boron steel, EPB system, size 112x83,3mm, reflector included
CHAINRING PROTECTOR	SKS Chainbooster for chainring 38T, diam. 50mm
FRONT LIGHT	Lezyne E65, 65 lux
REAR LIGHT	Trelock RearLight MudGuard Ebike6-12V
REAR CARRIER / PLATE	Racktime, 28, Max load 25Kg
KICKSTAND	Bianchi Custom
MUDGUARD / STAY	Racktime Alumee 62mm, 28
MOTOR UNIT	Bosch Performance Line, Purion display
BATTERY	Bosch Powertube 500Wh integrated battery

E-VERTIC T-TYPE | X5 / X7 9SP | YSBC3



The image shown is indicative only. Components and graphic detail may differ from actual model. Bianchi reserves the right to amend specifications and/or prices.

COLOR	E8 - Gold Stone / Graphite Race full GLOSSY SV - Grey / Graphite full GLOSSY
FRAME	e-VERTIC T-Type Step-through ALU sizes: 43, 48, 53 - 9x135 mm quick release dropouts - Post mount 180 disc brake type - Internal cable routing in steerer - 625Wh compatible
SEATPOST CLAMP	custom integrated seatpostclamp
HEADSET	Acros Headset 1,5 top / 1,5 - integrated cable routing
FORK	Suntoru NVX30 NLO DS 29, 100mm travel, 1.1/8 straight HT, w/out 9x100 QR, minimum 160mm rotor, maximum 180mm rotor, 30mm stanchions
SHIFTER	SRAM X5, 9SP
REAR DERAILLEUR	SRAM X7 9SP
CRANKSET	FSA E-Bike Diecast Crankset Gen 3 / 170mm / Die cast aluminum
BOTTOM BRACKET	included in the motor
CHAIN	KMC e9S NPBK
CASSETTE / FREEWHEEL	SRAM PG920, 11-34T, 9SP
BRAKE	Promax, DSK-925
DISC ROTOR	Promax DSK-925, 180mm, center lock
FRONT HUB	Shimano, HB-TX505,32H OLD:100MM AXLE:108MM, QR:133MM
REAR HUB	Shimano, FH-TX505-8, 32H 8/9/10/11-SPEED,OLD:135MM,AXLE:146MM,QR:170MM

RIM/WHEELSET	EBIKE 650 TR 28 - ETRTO 622 x 23C, 32hole, height 18mm
TIRE	Continental 55-622 eContact Plus
STEM	Velomann aluminium adjustable, integrated cable routing, Barbore 31,8 mm, Extension 90 mm
HANDLEBAR	Velomann 31.8/680mm, RISE 20MM, SWEEP 15°
GRIP / TAPE	Herrmans GRIPset Oxy
SEATPOST	Velomann travel 50mm, suspension seatpost 300 for size 43 350 for sizes 48, 53
SADDLE	Velomann, size 270x162mm, 385gr.
PEDALS	VP, axle 7mm boron steel, EPB system, size 112x83,3mm, reflector included
CHAINRING PROTECTOR	SKS Chainbooster for chainring 38T, diam. 50mm
FRONT LIGHT	Lezyne E65, 65 lux
REAR LIGHT	Trelock RearLight MudGuard Ebike6-12V
REAR CARRIER / PLATE	Racktime, 28, Max load 25Kg
KICKSTAND	Bianchi Custom
MUDGUARD / STAY	Racktime Alumee 62mm, 28
MOTOR UNIT	Bosch Active Line Plus, Purion display
BATTERY	Bosch Powertube 400Wh integrated battery

E-VERTIC T-TYPE | DEORE 10SP | YSBC2



The image shown is indicative only. Components and graphic detail may differ from actual model. Bianchi reserves the right to amend specifications and/or prices.

COLOR	E8 - Gold Stone / Graphite Race full GLOSSY EG - Green / Black full GLOSSY SV - Grey / Graphite full GLOSSY
FRAME	e-VERTIC T-Type ALU sizes: 43, 48, 53 - 9x135 mm quick release dropouts - Post mount 180 disc brake type - Internal cable routing in steerer - 625Wh compatible
SEATPOST CLAMP	custom integrated seatpostclamp
HEADSET	Acros Headset 1,5 top / 1,5 - integrated cable routing
FORK	Suntoru NVX30 NLO DS 29, 100mm travel, 1.1/8 straight HT, w/out 9x100 QR, minimum 160mm rotor, maximum 180mm rotor, 30mm stanchions
SHIFTER	Shimano, SL-M4100-R, DEORE, 10-SPEED
REAR DERAILLEUR	Shimano, RD-M4120, DEORE, SGS 10/11-SPEED
CRANKSET	FSA E-Bike Diecast Crankset Gen 3 / 170mm / Die cast aluminum
BOTTOM BRACKET	included in the motor
CHAIN	KMC e10S NPBK
CASSETTE / FREEWHEEL	Sunrace, 10sp, 11-42T
BRAKE	Promax, DSK-925
DISC ROTOR	Promax DSK-925, 180mm, center lock
FRONT HUB	Shimano, HB-TX505,32H OLD:100MM AXLE:108MM, QR:133MM
REAR HUB	Shimano, FH-TX505-8, 32H 8/9/10/11-SPEED,OLD:135MM,AXLE:146MM,QR:170MM

RIM/WHEELSET	EBIKE 650 TR 28 - ETRTO 622 x 23C, 32hole, height 18mm
TIRE	Continental 55-622 eContact Plus
STEM	Velomann aluminium adjustable, integrated cable routing, Barbore 31,8 mm, Extension 90 mm
HANDLEBAR	Velomann 31.8/680mm, RISE 20MM, SWEEP 15°
GRIP / TAPE	Herrmans GRIPset Oxy
SEATPOST	Velomann travel 50mm, suspension seatpost 300 for size 43 350 for sizes 48, 53
SADDLE	Velomann, size 270x162mm, 385gr.
PEDALS	VP, axle 7mm boron steel, EPB system, size 112x83,3mm, reflector included
CHAINRING PROTECTOR	SKS Chainbooster for chainring 38T, diam. 50mm
FRONT LIGHT	Lezyne E65, 65 lux
REAR LIGHT	Trelock RearLight MudGuard Ebike6-12V
REAR CARRIER / PLATE	Racktime, 28, Max load 25Kg
KICKSTAND	Bianchi Custom
MUDGUARD / STAY	Racktime Alumee 62mm, 28
MOTOR UNIT	Bosch Performance Line, Purion display
BATTERY	Bosch Powertube 500Wh integrated battery

E-VERTIC T-TYPE | DEORE 10SP | YSBC2

EJ - Stone/Black Glossy



The image shown is indicative only. Components and graphic detail may differ from actual model. Bianchi reserves the right to amend specifications and/or prices.

E-VERTIC T-TYPE | X5/X7 9SP | YSBC1



The image shown is indicative only. Components and graphic detail may differ from actual model. Bianchi reserves the right to amend specifications and/or prices.

COLOR	EG - Green / Black full GLOSSY SV - Grey / Graphite full GLOSSY
FRAME	e-VERTIC T-Type ALU sizes: 43, 48, 53 - 9x135 mm quick release dropouts - Post mount 180 disc brake type - Internal cable routing in steerer - 625Wh compatible
SEATPOST CLAMP	custom integrated seatpostclamp
HEADSET	Acros Headset 1,5 top / 1,5 - integrated cable routing
FORK	Suntoru NVX30 NLO DS 29, 100mm travel, 1.1/8 straight HT, w/out 9x100 QR, minimum 160mm rotor, maximum 180mm rotor, 30mm stanchions
SHIFTER	SRAM X5, 9SP
REAR DERAILLEUR	SRAM X7 9SP
CRANKSET	FSA E-Bike Diecast Crankset Gen 3 / 170mm / Die cast aluminum
BOTTOM BRACKET	included in the motor
CHAIN	KMC e9S NPBK
CASSETTE / FREEWHEEL	SRAM PG920, 11-34T, 9SP
BRAKE	Promax, DSK-925
DISC ROTOR	Promax DSK-925, 180mm, center lock
FRONT HUB	Shimano, HB-TX505,32H OLD:100MM AXLE:108MM, QR:133MM
REAR HUB	Shimano, FH-TX505-8, 32H 8/9/10/11-SPEED,OLD:135MM,AXLE:146MM,QR:170MM

RIM/WHEELSET	EBIKE 650 TR 28 - ETRTO 622 x 23C, 32hole, height 18mm
TIRE	Continental 55-622 eContact Plus
STEM	Velomann aluminium adjustable, integrated cable routing, Barbore 31,8 mm, Extension 90 mm
HANDLEBAR	Velomann 31.8/680mm, RISE 20MM, SWEEP 15°
GRIP / TAPE	Herrmans GRIPset Oxy
SEATPOST	Velomann travel 50mm, suspension seatpost 300 for size 43 350 for sizes 48, 53
SADDLE	Velomann, size 270x162mm, 385gr.
PEDALS	VP, axle 7mm boron steel, EPB system, size 112x83,3mm, reflector included
CHAINRING PROTECTOR	SKS Chainbooster for chainring 38T, diam. 50mm
FRONT LIGHT	Lezyne E65, 65 lux
REAR LIGHT	Trelock RearLight MudGuard Ebike6-12V
REAR CARRIER / PLATE	Racktime, 28, Max load 25Kg
KICKSTAND	Bianchi Custom
MUDGUARD / STAY	Racktime Alumee 62mm, 28
MOTOR UNIT	Bosch Active Line Plus, Purion display
BATTERY	Bosch Powertube 400Wh integrated battery

E-VERTIC T-TYPE ST | DEORE 10SP | YSBC4F



The image shown is indicative only. Components and graphic detail may differ from actual model. Bianchi reserves the right to amend specifications and/or prices.

COLOR	E8 - Gold Stone / Graphite Race full GLOSSY EG - Green / Black full GLOSSY SV - Grey / Graphite full GLOSSY
FRAME	e-VERTIC T-Type Step-through ALU sizes: 43, 48, 53 - 9x135 mm quick release dropouts - Post mount 180 disc brake type - Internal cable routing in steerer - 625Wh compatible
SEATPOST CLAMP	custom integrated seatpostclamp
HEADSET	Acros Headset 1,5 top / 1,5 - integrated cable routing
FORK	Suntour NVX30 NLO DS 29, 100mm travel, 1.1/8 straight HT, w/out 9x100 QR, minimum 160mm rotor, maximum 180mm rotor, 30mm stanchions
SHIFTER	Shimano, SL-M4100-R, DEORE, 10-SPEED
REAR DERAILLEUR	Shimano, RD-M4120, DEORE, SGS 10/11-SPEED
CRANKSET	FSA E-Bike Diecast Crankset Gen 3 / 170mm / Die cast aluminum
BOTTOM BRACKET	included in the motor
CHAIN	KMC e10S NPBK
CASSETTE / FREEWHEEL	Sunrace, 10sp, 11-42T
BRAKE	Promax, DSK-925
DISC ROTOR	Promax DSK-925, 180mm, center lock
FRONT HUB	Shimano, HB-TX505,32H OLD:100MM AXLE:108MM, QR:133MM
REAR HUB	Shimano, FH-TX505-8, 32H 8/9/10/11-SPEED,OLD:135MM,AXLE:146MM,QR:170MM
RIM/WHEELSET	EBIKE 650 TR 28 - ETRTO 622 x 23C, 32hole, height 18mm

TIRE	Continental 55-622 eContact Plus
STEM	Velomann aluminium adjustable, integrated cable routing, Barbore 31,8 mm, Extension 90 mm
HANDLEBAR	Velomann 31.8/680mm, RISE 20MM, SWEEP 15°
GRIP / TAPE	Herrmans GRIPset Oxy
SEATPOST	Velomann travel 50mm, suspension seatpost 300 for size 43 350 for sizes 48, 53
SADDLE	Velomann, size 270x162mm, 385gr.
PEDALS	VP, axle 7mm boron steel, EPB system, size 112x83,3mm, reflector included
CHAINRING PROTECTOR	SKS Chainbooster for chainring 38T, diam. 50mm
FRONT LIGHT	Lezyne E65, 65 lux
REAR LIGHT	Trelock RearLight MudGuard Ebike6-12V
REAR CARRIER / PLATE	Racktime, 28, Max load 25Kg
KICKSTAND	Bianchi Custom
MUDGUARD / STAY	Racktime Alumee 62mm, 28
MOTOR UNIT	Bosch Performance Line, Purion display
BATTERY	Bosch Powertube 625Wh integrated battery

T-TRONIK T-TYPE ST | X7/X5 9SP | YSBT9



The image shown is indicative only. Components and graphic detail may differ from actual model. Bianchi reserves the right to amend specifications and/or prices.

COLOR	2T - Green / Dark Graphite Full Matt TY - Urban Gray / Dark Graphite Full Matt
FRAME	T-Tronik T-Type Step-through ALU sizes: 43, 47 - 9x135 mm quick release dropouts - Post mount 160 disc brake type - Internal cable routing in DT - Frame lock compatible
SEATPOST CLAMP	Promax diam.34,9mm, hand friendly alloy clamp & lever
HEADSET	FSA HST STbk 1-1/8 44H-N10P
FORK	Suntour NEX-E25 DS 700C, 63mm travel, 1-1/8 HT,w/ out 9x100 QR , minimum 160mm rotor, maximum 180mm rotor, 30mm stanchions
SHIFTER	Sram X5
REAR DERAILLEUR	Sram X7 Rear Derailleur, 9sp, max. 36T
CRANKSET	Shimano, FC-E6100, 170MM Shimano CHAINRING, SM-CRE61, 38T W/O CG
BOTTOM BRACKET	included in the motor
CHAIN	KMC e9S, 1/2 x 11/128
CASSETTE / FREEWHEEL	Sram PG-920 Cassette, 9sp, 11-13-15-17-20-23-26-30-34T
BRAKE	Promax, DSK-925
DISC ROTOR	Promax DSK-925, 160mm, center lock
FRONT HUB	Shimano, 32H OLD:100MM AXLE:108MM
REAR HUB	Shimano, 32H 8/9/10/11-SPEED,OLD:135MM,AXLE:146MM,QR:170MM

RIM/WHEELSET	EBIKE 650 TR 28 - ETRTO 622 x 23C, 32hole, height 18mm
TIRE	Chaoyang E-Liner City 700x45C, 60tpi
STEM	Velomann, 28,6 mm steerer ID Clamp, 31,8 mm
HANDLEBAR	Velomann 31.8/680mm, RISE 20MM, SWEEP 15°
GRIP / TAPE	Herrmans GRIPset Oxy
SEATPOST	Velomann, lenght 350mm for SM size and 400mm for MD, diam.31,6mm, 0mm seatback
SADDLE	Selle Royal
PEDALS	VP black aluminum, axle 7mm, 113,5x110,5mm
CHAINRING PROTECTOR	SKS Chainbow_E, Crank hole 100 mm, Bracket for Shimano E6100-E5000
FRONT LIGHT	Herrmans Mr GO e-bike 6/12 V
REAR LIGHT	Axa Juno e-bike 6/12 V
REAR CARRIER / PLATE	Racktime, 28, w/ roundstay 350mm
KICKSTAND	Ursus, load 35kg
MUDGUARD / STAY	SKS, internal cable routing on the rear mudguard
MOTOR UNIT	Shimano E6100
BATTERY	Phylion 417Wh integrated battery

T-TRONIK T-TYPE | X7/X5 9SP | YSBT8



The image shown is indicative only. Components and graphic detail may differ from actual model. Bianchi reserves the right to amend specifications and/or prices.

COLOR	2T - Green / Dark Graphite Full Matt TY - Urban Gray / Dark Graphite Full Matt
FRAME	T-Tronik T-Type sizes: 47,51 - 9x135 mm quick release dropouts - Post mount 160 disc brake type - Internal cable routing in DT - Frame lock compatible
SEATPOST CLAMP	Promax diam.34,9mm, hand friendly alloy clamp & lever
HEADSET	FSA HST STbk 1-1/8 44H-N10P
FORK	Suntour NEX-E25 DS 700C, 63mm travel, 1-1/8 HT,w/ out 9x100 QR , minimum 160mm rotor, maximum 180mm rotor, 30mm stanchions
SHIFTER	Sram X5
REAR DERAILLEUR	Sram X7 Rear Derailleur, 9sp, max. 36T
CRANKSET	Shimano, FC-E6100, 170MM Shimano CHAINRING, SM-CRE61, 38T W/O CG
BOTTOM BRACKET	included in the motor
CHAIN	KMC e9S, 1/2 x 11/128
CASSETTE / FREEWHEEL	Sram PG-920 Cassette, 9sp, 11-13-15-17-20-23-26-30-34T
BRAKE	Promax, DSK-925
DISC ROTOR	Promax DSK-925, 160mm, center lock
FRONT HUB	Shimano, 32H OLD:100MM AXLE:108MM
REAR HUB	Shimano, 32H 8/9/10/11-SPEED,OLD:135MM,AXLE:146MM,QR:170MM

RIM/WHEELSET	EBIKE 650 TR 28 - ETRTO 622 x 23C, 32hole, height 18mm
TIRE	Chaoyang E-Liner City 700x45C, 60tpi
STEM	Velomann, 28,6 mm steerer ID Clamp, 31,8 mm
HANDLEBAR	Velomann 31.8/680mm, RISE 20MM, SWEEP 15°
GRIP / TAPE	Herrmans GRIPset Oxy
SEATPOST	Velomann, lenght 350mm for SM size and 400mm for MD, diam.31,6mm, 0mm seatback
SADDLE	Selle Royal
PEDALS	VP black aluminum, axle 7mm, 113,5x110,5mm
CHAINRING PROTECTOR	SKS Chainbow_E, Crank hole 100 mm, Bracket for Shimano E6100-E5000
FRONT LIGHT	Herrmans Mr GO e-bike 6/12 V
REAR LIGHT	Axa Juno e-bike 6/12 V
REAR CARRIER / PLATE	Racktime, 28, w/ roundstay 350mm
KICKSTAND	Ursus, load 35kg
MUDGUARD / STAY	SKS, internal cable routing on the rear mudguard
MOTOR UNIT	Shimano E6100
BATTERY	Phylion 417Wh integrated battery

E-URBAN


e-OMNIA
BIANCHI
e-OMNIA

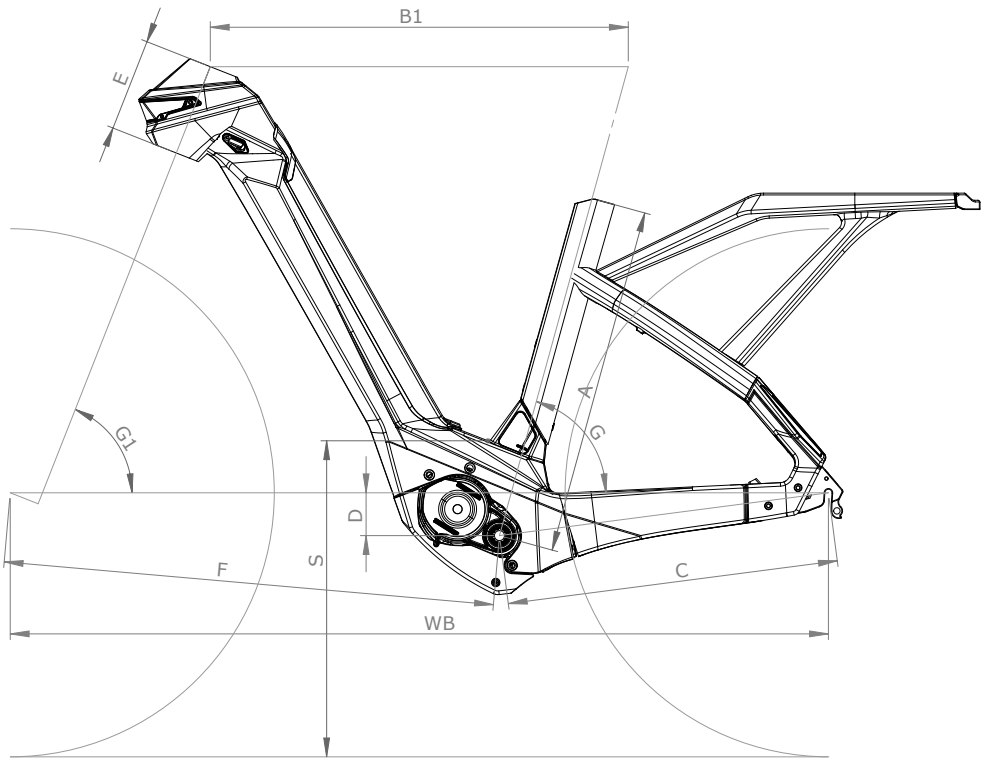

E-Omnia C type									
SIZE	A	B1	C	D	E	G	G1	S	WB
S	450	600	465	60	130	74.5°	68.5°	443	1147
M	500	615	465	60	135	74.5°	68.5°	443	1162
L	550	630	465	60	135	74°	68.5°	443	1177

E-OMNIA C-TYPE KEY FEATURES

- Battery options 500Wh/625Wh
- Torque 85Nm
- Integrated front (40lux), rear and side led lights
- Visibility-range of 100 metres, and visibility to others at 500 metres
- Bianchi custom mudguard
- Integrated seat clamp

E-OMNIA C-TYPE | DEORE 10SP | YSBE8



The image shown is indicative only. Components and graphic detail may differ from actual model. Bianchi reserves the right to amend specifications and/or prices.

COLOR	4G - CK16 / Dark celeste full MATT 4H - Metal Brown / Graphite full MATT 4I - Metal Grey / Graphite full matt
FRAME	E-OMNIA C-Type chain drive ALU sizes: 45-50-55 - 9x135 mm quick release dropouts (special dropout for external derailleur) - Post mount 180 disc brake type - Internal cable routing in DT - Frame lock compatible - 625Wh compatible - custom rear carrier integrated in the frame design
SEATPOST CLAMP	custom integrated seatpostclamp
HEADSET	FSA NO.55R/558 1.5
FORK	Suntour XCM34-Boost LOR DS 29, 100mm travel, 1.5 tapered HT, w/ 15AH2-110 TA, minimum 160mm rotor, maximum 203mm rotor, 34mm stanchions
SHIFTER	Shimano, SL-M4100-R, Deore, 10-SPEED
REAR DERAILLEUR	Shimano, RD-M4120, DEORE, SGS 10/11-SPEED
CRANKSET	FSA Metropolis, AL-8/IS FSA Alloy E-bike ISIS Crank, ISIS / 170mm, FSA Chainline 50mm, FSA Chainring
BOTTOM BRACKET	included in the motor
CHAIN	KMC e10S NPBK, 1/2 x 11/128
CASSETTE / FREEWHEEL	Sunrace CSMS2 TAY, 10sp, 11-42T
BRAKE	Promax, DSK-925
DISC ROTOR	Promax DSK-925, 180mm, center lock
FRONT HUB	Formula CL-811 for Center Lock, 32h, 15x110mm TA

REAR HUB	Formula CL-1422 Center lock, 32hole, 14G, O.L.D. 135mm AXEL145mm
RIM/WHEELSET	Velomann E-Sport Tubeless Ready 29, 25-622, 32 hole
TIRE	Vittoria e-Randonneur, 50-622
STEM	Velomann 35,3D FORGED 0°>90° L70MM
HANDLEBAR	Velomann, 31.8*630 / Rise 34mm / Back Sweep 41°
GRIP / TAPE	Herrmans Grip
SEATPOST	Velomann 31.6*350, suspension seatpost
SADDLE	Velomann, 256x220, 612gr.
PEDALS	VP, axle 7mm boron steel, EPB system, size 112x83,3mm, reflector included
CHAINRING PROTECTOR	ChainGuard 38T PLasticBlack custom for Omnia C-Type
FRONT LIGHT	Spanninga custom integrated light, 40 lux
REAR LIGHT	Spanninga custom integrated light
REAR CARRIER / PLATE	custom rear carrier integrated into the frame design
KICKSTAND	Velomann load 35kg
MUDGUARD / STAY	SKS PET Mudguards A65 R /28
MOTOR UNIT	Bosch Performance Line CX, 250W, 85Nm, Kiox display
BATTERY	Bosch Powertube 625Wh integrated battery

E-OMNIA C-TYPE | NEXUS 5SP | YR/YSBE9



The image shown is indicative only. Components and graphic detail may differ from actual model. Bianchi reserves the right to amend specifications and/or prices.

COLOR	4G - CK16 / Dark celeste full MATT 4H - Metal Brown / Graphite full MATT 4I - Metal Grey / Graphite full MATT
FRAME	E-OMNIA C-Type belt drive ALU sizes: 45-50-55 - IG 135 mm quick release dropouts (special dropout for internal gear) - Post mount 180 disc brake type - Internal cable routing in DT - Frame lock compatible - 625Wh compatible - custom rear carrier integrated in the frame design
SEATPOST CLAMP	custom integrated seatpostclamp
HEADSET	FSA NO.55R/558 1.5
FORK	Suntour XCM34-Boost LOR DS 29, 100mm travel, 1.5 tapered HT, w/ 15AH2-110 TA, minimum 160mm rotor, maximum 203mm rotor, 34mm stanchions
SHIFTER	Shimano, SL-C7000-5, NEXUS, REVO SHIFTER, 5-SPEED, 2500MM OUTER
CRANKSET	FSA Metropolis, AL-8/IS FSA Alloy E-bike ISIS Crank, ISIS / 170mm
BOTTOM BRACKET	included in the motor
CHAIN	CDXB118, CDX Belt Gates Carbon Drive, 118T, black 1298 mm Length, 11 mm Pitch, 12 mm Width
CASSETTE / FREEWHEEL	Shimano Nexus 5 Mech, CDX Rear Sprocket, 28T
BRAKE	Promax, DSK-925
DISC ROTOR	Promax DSK-925, 180mm, center lock
FRONT HUB	Formula CL-811 for Center Lock, 32h, 15x110mm TA

REAR HUB	Shimano, SG-C7000-5D, NEXUS, 5-SPEED, FOR CENTER LOCK DISC BRAKE, 32H 135X187MM
RIM/WHEELSET	Velomann E-Sport Tubeless Ready 29, 25-622, 32 hole
TIRE	Vittoria e-Randonneur, 50-622
STEM	Velomann 35,3D FORGED 0°>90° L70MM
HANDLEBAR	Velomann, 31.8*630 / Rise 34mm / Back Sweep 41°
GRIP / TAPE	Herrmans Grip
SEATPOST	Velomann 31.6*350, suspension seatpost
SADDLE	Velomann, 256x220, 612gr.
PEDALS	VP, axle 7mm boron steel, EPB system, size 112x83,3mm, reflector included
FRONT LIGHT	Spanninga custom integrated light, 40 lux
REAR LIGHT	Spanninga custom integrated light
REAR CARRIER / PLATE	custom rear carrier integrated into the frame design
KICKSTAND	Velomann load 35kg
MUDGUARD / STAY	SKS PET Mudguards A65 R /28
MOTOR UNIT	Bosch Performance Line CX, 250W, 85Nm, Kiox display
BATTERY	Bosch Powertube 625Wh integrated battery

E-VERTIC C-TYPE | X5 9SP | YR/YSBB4



The image shown is indicative only. Components and graphic detail may differ from actual model. Bianchi reserves the right to amend specifications and/or prices.

COLOR	T5: Champagne / Graphite Race Full Matt T6: Blue Grey / Graphite Race Full Matt
FRAME	e-VERTIC C-Type ALU (gravity casting tecnology) sizes: 43, 48, 53
SEATPOST CLAMP	SeatpLock SET AL bk T-Tronik + Omnia Screw M5x40, CH, hex, black Seatclamp Rubber Cover Omnia
HEADSET	Headset 1,5" top / 1,5" bottom - bearings - integrated cable routing Starnut Black screw
FORK	NVX30 DS 29", 100mm, COIL w/Preload adjuster, AC4C, 30 mm stanchions, STKM, Cr-plating, Pitch 130 mm, Steerer 1-1/8"(TS), STKM, O.L.D. 9-100, Post 160 Direct
SHIFTER	X5 TRIGGER REAR 9-SPD BLK 2200MM CABLE (00.7015.178.000)
REAR DERAILLEUR	RD X7 SHORT CAGE ALUMINUM 9SPD BLK
CRANKSET	FSA E-Bike Diecast Crankset - CK220 Gen 3 / 170mm / Die cast aluminum / Black / Painting / w/o crank bolt FSA Direct Mount Steel Chainring - 38T / w/HT Steel / ED / C.L. 50mm Bosch Gen3 Bolt - Bosch Gen3 crank bolt Black(pair)
BOTTOM BRACKET	included in the motor
CHAIN	Chain e9S NPBK 1/2" x 11/128" 120link
CASSETTE / FREEWHEEL	CS PG 920 11-34 9SPEED
BRAKE	DISC BRAKE ASSEMBLED SET, BL-MT200(L), BR-MT200(F), BLACK, SM-MA-F180P/P2, RESIN PAD(W/O FIN), 1000MM HOSE
BRAKE LEVER	Included in the brake set
DISC ROTOR	ROTOR FOR DISC BRAKE, SM-RT10, M 180MM, W/LOCK RING(INTERNAL AND EXTERNAL SERRATION, BLACK), FOR RESIN PAD ONLY,
FRONT HUB	FRONT HUB, HB-TX505,32H OLD:100MM AXLE:108MM, FOR CENTER LOCK ROTOR(W/O LOCK RING), QR:133MM W/O ROTOR MOUNTCOVER,
REAR HUB	FREEHUB, FH-TX505-8,FOR CENTER LOCK ROTOR(W/O LOCK RING), 32H 8/9/10-SPEED,OLD:135MM,AXLE:146MM,QR:170MM,W/O ROTOR MOUNTCOVER,
RIM/WHEELSET	EBIKE 650 TR 28" - ETRTO 622 x 23C, 32hole, height 18mm, double wall, single eyelet, 6,5mm valve, black anodized (M651.622.32.06-8) without sticker, only ETRTO
TIRE	E-Liner City 700x45C, 60tpi, Rhino Skin / SPS
STEM	Velomann Promax MA-596, 28,6 mm steerer ID Clamp, 31,8 mm barbore w/Velomann laser logo
HANDLEBAR	Velomann WIEN 31.8/680mm, RISE 20MM, SWEEP 15° MATT BLACK w/Velomann laser logo
GRIP / TAPE	GRIPset Oxy DD29BR/BL 130mm/130mm black-black, d.22mm
SEATPOST	Velomann SP-7019, lenght 350mm for SM size and 400mm for MD, LG, diam.31,6mm, 0mm seatback, Al2014 shaft + alloy head, w/Velomann Logo
SADDLE	Velomann 8214DC, steel rail, black cover 8067, 254x183mm, 420gr.
PEDALS	VPE-889P one piecePP body inlaid Grip tread, axle 7mm boron steel, EPB system, size 112x83,3mm, reflector included.
FRONT LIGHT	BLS Front incl HIGO MICRO A cable 785mm Female connector BLS cable 250mm w/MALE connector and connector for Bosch Gen4
REAR LIGHT	RearLight MudGuard Ebike6-12V Trelock LS-421
REAR CARRIER / PLATE	RT Stan-it, 28", Max load 25Kg, black, IMM mounting
KICKSTAND	Bianchi Custom modello KING EVO XL w/o screw
MUDGUARD / STAY	Alumee 62mm, 28", AL 6063-T4, black
MOTOR UNIT	Bosch Active Line Plus 25 km/h Powertube 400 Horizontal

E-VERTIC C-TYPE | DEORE 10SP | YSBB5



The image shown is indicative only. Components and graphic detail may differ from actual model. Bianchi reserves the right to amend specifications and/or prices.

COLOR	T5 - Graphite / Champagne full MATT T6 - Graphite / Blue-Grey full MATT
FRAME	e-VERTIC C-Type ALU sizes: 43, 48, 53 - 9x135 mm quick release dropouts - Post mount 180 disc brake type - Internal cable routing in steerer - 625Wh compatible
SEATPOST CLAMP	custom seatpostclamp
HEADSET	Acros Headset 1,5 top / 1,5 - integrated cable routing
FORK	Suntour NVX30 NLO DS 29, 100mm travel, 1.1/8 straight HT, w/out 9x100 QR, minimum 160mm rotor, maximum 180mm rotor, 30mm stanchions
SHIFTER	Shimano, SL-M4100-R, DEORE, 10-SPEED
REAR DERAILLEUR	Shimano, RD-M4120, DEORE, SGS 10/11-SPEED
CRANKSET	FSA E-Bike Diecast Crankset Gen 3 / 170mm / Die cast aluminum
BOTTOM BRACKET	included in the motor
CHAIN	KMC e10S, 1/2 x 11/128
CASSETTE / FREEWHEEL	Sunrace, 10sp, 11-42T
BRAKE	Promax, DSK-925
DISC ROTOR	Promax DSK-925, 180mm, center lock
FRONT HUB	Shimano, HB-TX505,32H OLD:100MM AXLE:108MM, QR:133MM
REAR HUB	Shimano, FH-TX505-8, 32H 8/9/10/11-SPEED,OLD:135MM,AXLE:146MM,QR:170MM
RIM/WHEELSET	EBIKE 650 TR 28 - ETRTO 622 x 23C, 32hole, height 18mm

TIRE	Continental 50-622 eContact Plus
STEM	Velomann aluminium adjustable, integrated cable routing, Barbore 31,8 mm, Extension 90 mm
HANDLEBAR	Velomann 31.8/680mm, RISE 20MM, SWEEP 15°
GRIP / TAPE	Herrmans GRIPset Oxy
SEATPOST	Velomann travel 50mm, suspension seatpost 300 for size 43 350 for sizes 48, 53
SADDLE	Velomann, size 270x162mm, 385gr.
PEDALS	VP, axle 7mm boron steel, EPB system, size 112x83,3mm, reflector included
CHAINRING PROTECTOR	SKS Chainbooster for chainring 38T, diam. 50mm
FRONT LIGHT	Lezyne E65, 65 lux
REAR LIGHT	Trelock RearLight MudGuard Ebike6-12V
REAR CARRIER / PLATE	Racktime, 28, Max load 25Kg
KICKSTAND	Bianchi Custom
MUDGUARD / STAY	Racktime Alumee 62mm, 28
MOTOR UNIT	Bosch Performance Line, Purion display
BATTERY	Bosch Powertube 500Wh integrated battery

E-VERTIC C-TYPE | DEORE 10SP | YSBB5

EM - Champagne/nero matt



The image shown is indicative only. Components and graphic detail may differ from actual model. Bianchi reserves the right to amend specifications and/or prices.

E-VERTIC C-TYPE | DEORE 10SP | YSBB5F



The image shown is indicative only. Components and graphic detail may differ from actual model. Bianchi reserves the right to amend specifications and/or prices.

COLOR	T5 - Graphite / Champagne full MATT T6 - Graphite / Blue-Grey full MATT
FRAME	e-VERTIC C-Type ALU sizes: 43, 48, 53 - 9x135 mm quick release dropouts - Post mount 180 disc brake type - Internal cable routing in steerer - 625Wh compatible
SEATPOST CLAMP	custom seatpostclamp
HEADSET	Acros Headset 1,5 top / 1,5 - integrated cable routing
FORK	Suntour NVX30 NLO DS 29, 100mm travel, 1.1/8 straight HT, w/out 9x100 QR, minimum 160mm rotor, maximum 180mm rotor, 30mm stanchions
SHIFTER	Shimano, SL-M4100-R, DEORE, 10-SPEED
REAR DERAILLEUR	Shimano, RD-M4120, DEORE, SGS 10/11-SPEED
CRANKSET	FSA E-Bike Diecast Crankset Gen 3 / 170mm / Die cast aluminum
BOTTOM BRACKET	included in the motor
CHAIN	KMC e10S, 1/2 x 11/128
CASSETTE / FREEWHEEL	Sunrace, 10sp, 11-42T
BRAKE	Promax, DSK-925
DISC ROTOR	Promax DSK-925, 180mm, center lock
FRONT HUB	Shimano, HB-TX505,32H OLD:100MM AXLE:108MM, QR:133MM
REAR HUB	Shimano, FH-TX505-8, 32H 8/9/10/11-SPEED,OLD:135MM,AXLE:146MM,QR:170MM
RIM/WHEELSET	EBIKE 650 TR 28 - ETRTO 622 x 23C, 32hole, height 18mm

TIRE	Continental 50-622 eContact Plus
STEM	Velomann aluminium adjustable, integrated cable routing, Barbore 31,8 mm, Extension 90 mm
HANDLEBAR	Velomann 31.8/680mm, RISE 20MM, SWEEP 15°
GRIP / TAPE	Herrmans GRIPset Oxy
SEATPOST	Velomann travel 50mm, suspension seatpost 300 for size 43 350 for sizes 48, 53
SADDLE	Velomann, size 270x162mm, 385gr.
PEDALS	VP, axle 7mm boron steel, EPB system, size 112x83,3mm, reflector included
CHAINRING PROTECTOR	SKS Chainbooster for chainring 38T, diam. 50mm
FRONT LIGHT	Lezyne E65, 65 lux
REAR LIGHT	Trelock RearLight MudGuard Ebike6-12V
REAR CARRIER / PLATE	Racktime, 28, Max load 25Kg
KICKSTAND	Bianchi Custom
MUDGUARD / STAY	Racktime Alumee 62mm, 28
MOTOR UNIT	Bosch Performance Line, Purion display
BATTERY	Bosch Powertube 400Wh integrated battery

T-TRONIK C-TYPE | X7/X5 9SP | YSB1T



The image shown is indicative only. Components and graphic detail may differ from actual model. Bianchi reserves the right to amend specifications and/or prices.

COLOR	GT - Blu Stone / Dark Graphite Full Matt JT - Iridescent Bronze / Dark Graphite Full Matt D7 - Celeste / Dark Graphite Full Matt
FRAME	T-Tronik C-Type ALU sizes: 43, 47 - 9x135 mm quick release dropouts - Post mount 160 disc brake type - Internal cable routing in DT - Frame lock compatible
SEATPOST CLAMP	Promax diam.34,9mm, hand friendly alloy clamp & lever
HEADSET	FSA HST STbk 1-1/8 44H-N10P
FORK	Suntour NEX-E25 DS 700C, 63mm travel, 1-1/8 HT,w/ out 9x100 QR , minimum 160mm rotor, maximum 180mm rotor, 30mm stanchions
SHIFTER	Sram X5
REAR DERAILLEUR	Sram X7 Rear Derailleur, 9sp, max. 36T
CRANKSET	Shimano CHAINRING, SM-CRE61, 38T W/O CG, FOR CHAIN LINE 46.5MM FSA SMN E-Bike Forged Crankset - SMN / 170mm
BOTTOM BRACKET	included in the motor
CHAIN	KMC e9S, 1/2 x 11/128
CASSETTE / FREEWHEEL	Sram PG-920 Cassette, 9sp, 11-13-15-17-20-23-26-30-34T
BRAKE	Promax, DSK-925
DISC ROTOR	Promax DSK-925, 160mm, center lock
FRONT HUB	Shimano, 32H OLD:100MM AXLE:108MM
REAR HUB	Shimano, 32H 8/9/10/11-SPEED,OLD:135MM,AXLE:146MM,QR:170MM

RIM/WHEELSET	EBIKE 650 TR 28 - ETRTO 622 x 23C, 32hole, height 18mm
TIRE	Chaoyang E-Liner City 700x45C, 60tpi
STEM	Velomann, 28,6 mm steerer ID Clamp, 31,8 mm
HANDLEBAR	Velomann 31.8/680mm, RISE 20MM, SWEEP 15°
GRIP / TAPE	Herrmans GRIPset Oxy
SEATPOST	Velomann, lenght 350mm for SM size and 400mm for MD, diam.31,6mm, 0mm seatback
SADDLE	Selle Royal
PEDALS	VP black aluminum, axle 7mm, 113,5x110,5mm
CHAINRING PROTECTOR	SKS Chainbow_E, Crank hole 100 mm, Bracket for Shimano E6100-E5000
FRONT LIGHT	Herrmans Mr GO e-bike 6/12 V
REAR LIGHT	Axa Juno e-bike 6/12 V
REAR CARRIER / PLATE	Racktime, 28, w/ roundstay 350mm
KICKSTAND	Ursus, load 35kg
MUDGUARD / STAY	SKS, internal cable routing on the rear mudguard
MOTOR UNIT	Shimano E6100
BATTERY	Phylion 417Wh integrated battery



D7 - Celeste / Dark Graphite Full Matt



GT - Blu Stone / Dark Graphite Full Matt

T-TRONIK C-TYPE | X7/X5 9S P | YSB1TF



The image shown is indicative only. Components and graphic detail may differ from actual model. Bianchi reserves the right to amend specifications and/or prices.

COLOR	D7 - Celeste / Dark Graphite Full Matt
FRAME	T-Tronik C-Type ALU sizes: 47 - 9x135 mm quick release dropouts - Post mount 160 disc brake type - Internal cable routing in DT - Frame lock compatible
SEATPOST CLAMP	Promax diam.34,9mm, hand friendly alloy clamp & lever
HEADSET	FSA HST STbk 1-1/8 44H-N10P
FORK	Suntour NEX-E25 DS 700C, 63mm travel, 1-1/8 HT,w/ out 9x100 QR , minimum 160mm rotor, maximum 180mm rotor, 30mm stanchions
SHIFTER	Sram X5
REAR DERAILLEUR	Sram X7 Rear Derailleur, 9sp, max. 36T
CRANKSET	FSA CK-751 Forged Alu crank 165 mm FSA Steel MegaTooth Chainring - 34T
BOTTOM BRACKET	included in the motor
CHAIN	KMC e9S, 1/2 x 11/128
CASSETTE / FREEWHEEL	Sram PG-920 Cassette, 9sp, 11-13-15-17-20-23-26-30-34T
BRAKE	Promax, DSK-925
DISC ROTOR	Promax DSK-925, 160mm, center lock
FRONT HUB	Shimano, 32H OLD:100MM AXLE:108MM
REAR HUB	Shimano, 32H 8/9/10/11-SPEED,OLD:135MM,AXLE:146MM,QR:170MM

RIM/WHEELSET	EBIKE 650 TR 28 - ETRTO 622 x 23C, 32hole, height 18mm
TIRE	Chaoyang E-Liner City 700x45C, 60tpi
STEM	Velomann, 28,6 mm steerer ID Clamp, 31,8 mm
HANDLEBAR	Velomann 31.8/680mm, RISE 20MM, SWEEP 15°
GRIP / TAPE	Herrmans GRIPset Oxy
SEATPOST	Velomann, lenght 350mm for SM size and 400mm for MD, diam.31,6mm, 0mm seatback
SADDLE	Selle Royal
PEDALS	VP black aluminum, axle 7mm, 113,5x110,5mm
CHAINRING PROTECTOR	Included in the Crankset
FRONT LIGHT	Herrmans Mr GO e-bike 6/12 V
REAR LIGHT	Axa Juno e-bike 6/12 V
REAR CARRIER / PLATE	Racktime, 28, w/ roundstay 350mm
KICKSTAND	Ursus, load 35kg
MUDGUARD / STAY	SKS, internal cable routing on the rear mudguard
MOTOR UNIT	Shimano E7000
BATTERY	Phylion 417Wh integrated battery

E SPILLO CLASSIC | ALTUS 1X8SP | YSBT2



The image shown is indicative only. Components and graphic detail may differ from actual model. Bianchi reserves the right to amend specifications and/or prices.

COLOR	ST: Gun Metal/Black Full Mtt SU: CK16/Black Full Glossy
FRAME	E-Spillo Classic , Alu PG 6061,V-brake, O.L.D.139mm for rear hub motor unit, sizes: 47, 53cm
SEATPOST CLAMP	MX-112 Alloy, diam. 31,8mm
HEADSET	VP-MH305C Semi-integrated
FORK	Bianchi Steel, V-Brake
SHIFTER	Shimano Altus 8sp
REAR DERAILLEUR	Shimano Altus 8sp
CRANKSET	Prowheel Ounce-248AC 48T, crank length 170mm
BOTTOM BRACKET	axle length:124mm, w/speed sensor
CHAIN	Kmc Z8.1 8sp
CASSETTE / FREEWHEEL	Shimano CS-HG200-8, 8sp, 12-14-16-18-21-24-28-32T
BRAKE	V-Brake Alloy
BRAKE LEVER	V-Brake levers 4 fingers
FRONT HUB	Formula FM-21, 36hole, 14G, O.L.D. 100mm, w/QR
REAR HUB	EGoing Rear hub motor unit

RIM/WHEELSET	Spectra 622-19
TIRE	Spectra Unda Regular 700x37, 37-622 27TPI
STEM	Alloy adjustable, diam. 25,4mm, ext: 85mm, quill length: 180mm
HANDLEBAR	Alloy, width 590mm, rise 26mm, diam. 25.4mm, 33° backsweep
GRIP / TAPE	Herrmans 130mm
SEATPOST	Alloy diam. 27.2mm, length: 350mm
SADDLE	Selle Royal Wave
FRONT LIGHT	Retro Sport for ebike, 20lux. 0,5w LED IP144
REAR LIGHT	included in the SR11 battery
REAR CARRIER	AtranVelo Sport 28" Aluminium
KICKSTAND	Atranvelo KS Rex Atran 235
MUDGUARD	Steel
MOTOR UNIT	EGoing Rear hub motor unit 36V,250W, OLD 135mm w/418Wh rear carrier SR11 battery, w/led display, w/ speed sensor

E SPILLO CLASSIC | ALTUS 1X8SP | YSBT3



The image shown is indicative only. Components and graphic detail may differ from actual model. Bianchi reserves the right to amend specifications and/or prices.

COLOR	ST: Gun Metal/Black Full Mtt
FRAME	E-Spillo Classic Step Thru, Alu PG 6061,V-brake, O.L.D.139mm for rear hub motor unit, sizes: 43, 47cm
SEATPOST CLAMP	MX-112 Alloy, diam. 31,8mm
HEADSET	VP-MH305C Semi-integrated
FORK	Bianchi Steel, V-Brake
SHIFTER	Shimano Altus 8sp
REAR DERAILLEUR	Shimano Altus 8sp
CRANKSET	Prowheel Ounce-248AC 48T, crank length 170mm
BOTTOM BRACKET	axle length:124mm, w/speed sensor
CHAIN	Kmc Z8.1 8sp
CASSETTE / FREEWHEEL	Shimano CS-HG200-8, 8sp, 12-14-16-18-21-24-28-32T
BRAKE	V-Brake Alloy
BRAKE LEVER	V-Brake levers 4 fingers
FRONT HUB	Formula FM-21, 36hole, 14G, O.L.D. 100mm, w/QR
REAR HUB	EGoing Rear hub motor unit
RIM/WHEELSET	Spectra 622-19
TIRE	Spectra Unda Regular 700x37, 37-622 27TPI

STEM	Alloy adjustable, diam. 25,4mm, ext: 85mm, quill length: 180mm
HANDLEBAR	Alloy, width 590mm, rise 26mm, diam. 25.4mm, 33° backsweep
GRIP / TAPE	Herrmans 130mm
SEATPOST	Alloy diam. 27.2mm, length: 350mm
SADDLE	Selle Royal Wave
FRONT LIGHT	Retro Sport for ebike, 20lux. 0,5w LED IP144
REAR LIGHT	included in the SR11 battery
KICKSTAND	Atranvelo KS Rex Atran 235
MUDGUARD	Steel
MOTOR UNIT	EGoing Rear hub motor unit 36V,250W, OLD 135mm w/418Wh rear carrier SR11 battery, w/led display, w/ speed sensor
KICKSTAND	Bianchi Custom modello KING EVO XL w/o screw
MUDGUARD / STAY	Alumee 62mm, 28", AL 6063-T4, black
MOTOR UNIT	Bosch Active Line Plus 25 km/h Powertube 400 Horizontal

E SPILLO CITY | ALTUS 1X8SP | YSBT1



The image shown is indicative only. Components and graphic detail may differ from actual model. Bianchi reserves the right to amend specifications and/or prices.

COLOR	SO: Grey Glossy
FRAME	E-Spillo City Step Thru Frame Aluminium O.L.D.139mm for rear hub motor unit, size 45cm
SEATPOST CLAMP	MX27 31.8mm
HEADSET	VP-MH305C Semi-integrated
FORK	Bianchi Steel, V-Brake
SHIFTER	Shimano Altus 8sp
REAR DERAILLEUR	Shimano Altus 8sp
CRANKSET	Prowheel PRA-11C 38T, crank length: 170mm
BOTTOM BRACKET	axle length:124mm, w/speed sensor
CHAIN	Kmc Z8.1 8sp
CASSETTE / FREEWHEEL	Shimano CS-HG200-8, 8sp, 12-14-16-18-21-24-28-32T
BRAKE	V-Brake Alloy
BRAKE LEVER	V-Brake levers 4 fingers
FRONT HUB	Formula FM-21, 36hole, 14G, O.L.D. 100mm, w/QR
REAR HUB	EGoing Rear hub motor unit

RIM/WHEELSET	Spectra 622-19
TIRE	Duramax Regular H-480, Tire sport Pergo 40-622 27TPI
STEM	STQ ALsbbk 25,4/85 180mm 4BOLT MTSD-367N-5 black
HANDLEBAR	HB CITY steel diam.25.4mm,610mm/44°/rise 66mm
GRIP / TAPE	Herrmans Ergo TPE 120 mm
SEATPOST	Alloy, diam 27,2mm, length 300mm
SADDLE	Selle Royal Aurorae
FRONT LIGHT	Breeze Evo Classic, black case, 0,5W LED, 15 lux,
REAR LIGHT	integrated in the battery
KICKSTAND	Atranvelo KS Rex Atran 235
MUDGUARD	Steel
MOTOR UNIT	EGoing Rear hub motor unit 36V,250W,OLD 135MM w/318Wh rear carrier battery
KICKSTAND	Bianchi Custom
MUDGUARD / STAY	Racktime Alumee 62mm, 28
MOTOR UNIT	Bosch Performance Line, Purion display
BATTERY	Bosch Powertube 500Wh integrated battery

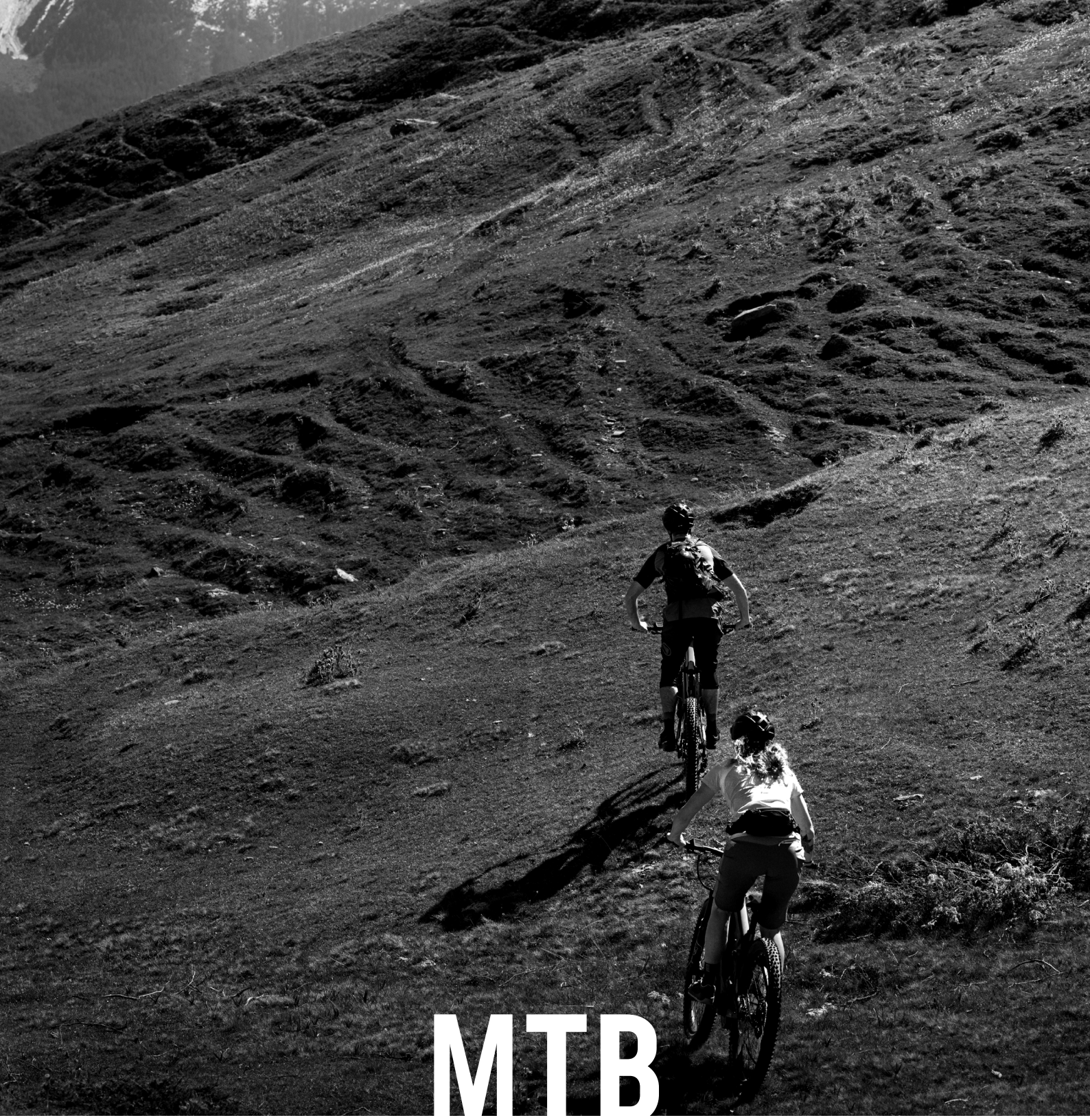

MTB

METHANOL 9.1 CV FS | SRAM XX EAGLE AXS 1X12SP | YSBS7



The image shown is indicative only. Components and graphic detail may differ from actual model. Bianchi reserves the right to amend specifications and/or prices.

COLOR	MX: Celeste CK16/Black full glossy
FRAME	Methanol 9.1 CV FS FS 100mm 29" full carbon, high modulus monocoque w/CV, 1.5" tapered HT, BB92, only 1x drivetrain compatibility, PM 160mm carbon dropout, 12x148 BOOST, internal cable routing, seatpost diam.31,6mm, shock lenght/travel 190/40mm, w/eyelets 20mm x diam.8mm, sizes 15,17,19,21" UDH compatible drop out Size: 38-43- 48-53
BOLTS / HARDWARE	Carbon-Ti bolts AL7075-T6, large button head, Torx M5*14mm
REAR SHOCK	FOX FLOAT DPS Remote - Factory - Kashima - SV EVOL - DPS; LSR, 2 Pos Remote PTU - Cable up - Metric - 190/40 - Neutral Decal
SEATPOST CLAMP	MR.Control CL-FJ21-1-35.4, 35,4mm CLAMP
HEADSET	FSA Orbit C-40, NO.42/ACB-A, Anod.Black 1 1/8-1.5 w/ H2001 4.3mm w/FSA logo, NO.42/ACB-A
FORK	FOX 34 Step-Cast - 29" - Factory - 100mm - FIT4 - Kabolt:15x110 - 1.5T - 44mm Rake + w/ remote bottom left dual-cable for 1xdrivetrain
SHIFTER	Sram XX1 EAGLE AXS 12sp discrete clamp
REAR DERAILLEUR	Sram XX1 EAGLE AXS 12sp
BATTERY AND BATTERY CHARGER AXS	Sram EP POWERPACK 1 BATTERY
CRANKSET	Sram XX1 EAGLE DUB 34T, arm lenght 170mm for 15" and 175mm for 17,19,21", 52mm chainline 148 BOOST compatible

BOTTOM BRACKET	Sram DUB PRESSFIT BB92 (41x92)
CHAIN	Sram PC-XX1 EAGLE 12s, 120links w/PowerLock
CASSETTE / FREEWHEEL	Sram XG-1299 EAGLE RAINBOW 12s, 10,12,14,16,18,21,24,28,32,36,42,52T
BRAKE	Shimano XTR M9100 F & M9110 R assembled set w/J-Kit for rear only, w/180mm P/P adaptor for front, rear Flat Mount
DISC ROTOR	Shimano RT-MT900 center lock type w/Ice Tech, 180mm front and 160mm rear
RIM/WHEELSET	DT Swiss XRC 1501 Spline One 29" Carbon 30mm, 15x110TA, 12x148TA rear XD body, 240s hub centerlock, TL-ready rim w/o eyelets including tubeless band and valve, 30mm inner width
TIRE	Kenda Booster Pro - 29x2.20
STEM	FSA KFX, ST-OS-105/CSI, -12°, size 60mm for 15", 70mm for 17", 80mm for 19 and 90mm for 21", 1,1/8 x diam.31,8mm, stack height 35mm, 3D forged/machined AL2014
HANDLEBAR	FSA KFX ICR flat, HB-MK-108-OS760/CCH/Di2, width 760mm, diam.31.8mm, backsweep 9°, upsweep 4°, UD carbon, UD carbon finish
GRIP / TAPE	T-One T-GP43X, Silicone grips, Rounded Pattern, Length: 130mm, Weight: 70g / pair
SEATPOST	FSA KFX SB0 Di2 compatible SP-RK-154- MTC/Di2, lengh: 350mm- 15", 400mm-17/19/21", diam.31,6mm, 0mm seatback, UD carbon monocoque
SADDLE	Fi'zi:k Taiga, S-alloy rails

METHANOL 9.3 CV FS | SHIMANO XT/SLX 1X12SP | YSBS9



The image shown is indicative only. Components and graphic detail may differ from actual model. Bianchi reserves the right to amend specifications and/or prices.

COLOR	MX: Celeste CK16/Black full glossy
FRAME	Methanol 9.3 CV FS 100mm 29" full carbon, high modulus monocoque w/CV, 1.5" tapered HT, BB92, only 1x drivetrain compatibility, PM 160mm carbon dropout, 12x148 BOOST, internal cable routing, seatpost diam.31,6mm, shock lenght/travel 190/40mm w/eyelets 20mm x diam.8mm, sizes 15,17,19,21" UDH compatible drop out Size: 38-43- 48-53
BOLTS / HARDWARE	Carbon-Ti bolts AL7075-T6, large button head, Torx M5*14mm, w/Bianchi & Carbon
REAR SHOCK	Sram Sid Luxe Select + RLR, 190/40mm, Debonair, w/eyelets 20mm x diam.8mm
SEATPOST CLAMP	MR.Control, 35,4mm CLAMP
HEADSET	FSA Orbit C-40, NO.42/ACB-A, Anod.Black 1 1/8-1.5 w/ H2001 4.3mm w/FSA logo, NO.42/ACB-A (H0415G0000E101)
FORK	Rock Shox SID SL SELECT 29", CHARGER RL, Solo Air 100mm w/Tall oneLoc remote left, 1.5 alu HT, 15X110mm Maxle Stealth, 32mm stanchions, magnesium lowers, PM 160mm disc mount, 44mm offset
SHIFTER	Shimano SLX, w/o Optical Gear Display, w/2050mm inner
REAR DERAILLEUR	Shimano XT 12sp, RD-M8100-SGS top normal, direct attachment, for 10-51T max

CRANKSET	Shimano, 32T, arms lenghts: 170mm-15", 175mm-17/19/21", 52mm CHAINLINE
BOTTOM BRACKET	Shimano Pressfit 41x92mm
CHAIN	ShimanoCN-M7100, 12sp, 118 link
CASSETTE / FREEWHEEL	Shimano, 12sp, 10-51T
BRAKE	Shimano M6100 w/rear J-Kit only
DISC ROTOR	Shimano RT-54, centerlock type, 180mm front and 160mm rear
RIM/WHEELSET	Reparto corse KOM light i25 29" Rim, 32 hole Pre Anodized Black PV Vinylx6 pcs, 622x25
TIRE	Kenda Booster Pro - 29x2.20
STEM	Reparto Corse, +/-7°, size 60mm for 15", 70mm for 17", 80mm for 19 and 90mm for 21", 1,1/8 x diam.31.8mm
HANDLEBAR	Reparto Corse, width 740mm, diam.31,8mm, backsweep 9°, double butted AL2014-T6
GRIP / TAPE	T-One T-GP43X, Rounded Pattern, Length: 130mm, Weight: 70g
SEATPOST	Reparto Corse, lenght: 350mm-15", 400mm- 17/19/21", diam.31.6mm, 0mm seatback
SADDLE	Fi'zi:k Taiga, S-alloy rails

NITRON 9.2 | SHIMANO XT/SLX 1X12SP | YR/YSBP4



The image shown is indicative only. Components and graphic detail may differ from actual model. Bianchi reserves the right to amend specifications and/or prices.

COLOR	NH: CK16 / Black Full Glossy NF: White/Black full glossy
FRAME	Nitron 29" full carbon monocoque, 1.5" tapered HT, BB92, seatpost diam.27,2mm, high direct mount, PM 160mm carbon dropout 12x148mm BOOST Thru axle, internal cable routing, sizes 15-17-19-21" Size: 38-43- 48-53
BOLTS / HARDWARE	Stainless bolts for waterbottle bosses (15">2pcs, 17,19,21">4pcs)
SEATPOST CLAMP	Promax MX-112C diam.31,8mm
HEADSET	FSA Orbit C-40, NO.42/ACB-A, Anod.Black 1 1/8-1.5 w/ H2001 4.3mm w/FSA logo, NO.42/ACB-A
FORK	Rock Shox SID SL 29", damper Rush RL, Debon Air 100mm w/Tall oneLoc remote left, 1.5 alu HT, 15X110mm Maxle Stealth, 32mm stanchions, magnesium lowers, PM 160mm disc mount, 44mm offset
SHIFTER	Shimano SLX 1x12 I-spec EV, w/o Optical Gear Display, w/2050mm inner
REAR DERAILLEUR	Shimano XT Shadow + Design 12s, RD-M8100-SGS top normal, direct attachment, for 10-51T max
CRANKSET	Shimano XT, 32T, arms lenghts: 170mm-15", 175mm-17/19/21", 52mm CHAINLINE
BOTTOM BRACKET	Shimano Pressfit 41x92mm BB-MT800-PA

CHAIN	Shimano CN-M7100, 12sp, 120 link
CASSETTE / FREEWHEEL	Shimano CS-M7100-12, 12sp, 10-51T
BRAKE	Shimano M6100 w/rear J-Kit only, resin pad, w/SM-MA-F180P/P2 adapter only for front
DISC ROTOR	Shimano SM-RT54 CL 180mm front & 160mm rear, CenterLock
RIM/WHEELSET	Velomann KOM light i25, 29" Rim, 32 hole Pre Anodized Black PV Vinylx6 pcs, 622x25
TIRE	Kenda Booster Pro - 29x2.20, Tubeless Race compound, Tubeless race, 120Tpi, folding, ETRTO 56-622
STEM	Velomann +/-7°, 1,1/8 x diam.31.8mm, size: 70mm-15", 80mm-17", 90mm-19/21"
HANDLEBAR	Velomann Flat top, width 720mm, diam.31,8mm, 9° backsweep, DB Alloy 6061-T6
GRIP / TAPE	T-One Rock T-GP34 single lock grip , TPR, plastic inner body, aluminium clamp
SEATPOST	Velomann, lenght: 350mm-15", 400mm- 17/19/21", diam.27.2mm, 0mm seatback
SADDLE	Velomann, manganese rail, lenght 277mm x width 144mm

NITRON 9.3 | SHIMANO XT/SLX 1X12SP | YR/ YSBP5



The image shown is indicative only. Components and graphic detail may differ from actual model. Bianchi reserves the right to amend specifications and/or prices.

COLOR	NH: CK16 / Black Full Glossy NF: White/Black full glossy
FRAME	Nitron 9.3, 29" full carbon monocoque, 1.5" tapered HT, BB92, seatpost diam.27,2mm, high direct mount, PM 160mm carbon dropout 12x148mm BOOST Thru axle, internal cable routing, sizes 15-17-19-21" Size: 38-43- 48-53
BOLTS / HARDWARE	Stainless bolts for waterbottle bosses (15">2pcs, 17,19,21">4pcs)
SEATPOST CLAMP	Promax MX-112C diam.31,8mm, elegant, stylish, light & strong seat clamp w/angled cut for carbon frames
HEADSET	FSA Orbit C-40, NO.42/ACB-A, Anod.Black 1 1/8-1.5 w/ H2001 4.3mm w/FSA logo, NO.42/ACB-A
FORK	Rock Shox Judy Gold RL 29" Solo Air 100mm w/Tall oneLoc remote left, 1.5 Tapered HT, 15x110mm BOOST Maxle stealth, 30mm stanchions, magnesium lowers, PM 160mm disc mount, 51mm offset
SHIFTER	Shimano SLX 1x12 I-spec EV, w/o Optical Gear Display, w/2050mm inner
REAR DERAILLEUR	Shimano XT Shadow + Design 12sp, RD-M8100-SGS top normal, direct attachment, for 10-51T max
CRANKSET	Shimano, 32T, arms lenghts: 170mm-15", 175mm-17/19/21", 52mm CHAINLINE
BOTTOM BRACKET	Shimano Pressfit 41x92mm

CHAIN	Shimano 12sp, 120 link
CASSETTE / FREEWHEEL	Shimano, 12sp, 10-51T
BRAKE	Shimano M4100 w/rear J-Kit only, w/SM-MA- F180P/P2 adapter only for front
DISC ROTOR	Shimano SM-RT10 CL 180mm front & 160mm rear
RIM/WHEELSET	Velomann KOM light i25 29" Rim, 32 hole Pre Anodized Black PV Vinylx6 pcs, 622x25
TIRE	Kenda Booster Pro - 29x2.20, Tubeless Race compound, Tubeless race, 120Tpi, folding, ETRTO 56-622
STEM	Velomann +/-7°, 1,1/8 x diam.31.8mm, size: 70mm-15", 80mm-17", 90mm-19/21"
HANDLEBAR	Velomann Flat top, width 720mm, diam.31,8mm, 9° backsweep, DB Alloy 6061-T6
GRIP / TAPE	T-One Rock T-GP34 single lock grip , TPR, plastic inner body, aluminium clamp
SEATPOST	Velomann, lenght: 350mm-15", 400mm- 17/19/21", diam.27.2mm, 0mm seatback
SADDLE	Velomann, manganese rail, lenght 277mm x width 144mm

NITRON 9.4 | SHIMANO XT/DEORE 1X12 | YSB07



The image shown is indicative only. Components and graphic detail may differ from actual model. Bianchi reserves the right to amend specifications and/or prices.

COLOR	NH - CK16 / Black Full Glossy NF - White/Black full glossy"
FRAME	Nitron 9.4, 29" full carbon monocoque, 1.5" tapered HT, BB92, seatpost diam.27,2mm, high direct mount, PM 160mm carbon dropout 12x148mm BOOST Thru axle, internal cable routing, sizes 15-17-19-21" Size: 38-43- 48-53
BOLTS / HARDWARE	Stainless bolts for waterbottle bosses (15">2pcs, 17,19,21">4pcs)
SEATPOST CLAMP	Promax MX-112C diam.31,8mm, elegant, stylish, light & strong seat clamp w/angled cut for carbon frames
HEADSET	FSA Orbit C-40, NO.42/ACB-A, Anod.Black 1 1/8-1.5 w/ H2001 4.3mm w/FSA logo, NO.42/ACB-A
FORK	Rock Shox Judy Silver TK 29" Solo Air 100mm w/ Poploc remote left, 1.5 Tapered HT, 15x110mm BOOST Maxle stealth, 30mm stanchions, magnesium lowers, PM 160mm disc mount, 51mm offset
SHIFTER	Shimano Deore 1x12sp, clamp band
REAR DERAILLEUR	Shimano XT 12sp, for 10-51T max
CRANKSET	Shimano, 32T, arms lenghts: 170mm-15", 175mm-17/19/21", 52mm CHAINLINE
BOTTOM BRACKET	Shimano Pressfit 41x92mm

CHAIN	Shimano, 12sp, 120 link
CASSETTE / FREEWHEEL	Shimano, 12sp, 10-51T
BRAKE	Shimano MT200 w/rear J-Kit only, Shimano logo, resin pad, w/SM-MA-F180P/P2 adapter only for front
DISC ROTOR	Shimano SM-RT10 CL 180mm front & 160mm rear, CenterLock
RIM/WHEELSET	Velomann KOM light i25 29" Rim, 32 hole Pre Anodized Black PV Vinylx6 pcs, 622x25
TIRE	Kenda Booster Pro - 29x2.20, Tubeless Race compound, Tubeless race, 120Tpi, folding, ETRTO 56-622
STEM	Velomann +/-7°, 1,1/8 x diam.31.8mm, size: 70mm-15", 80mm-17", 90mm-19/21"
HANDLEBAR	Velomann Flat top, width 720mm, diam.31,8mm, 9° backsweep, DB Alloy 6061-T6
GRIP / TAPE	T-One Rock T-GP34 single lock grip , TPR, plastic inner body, aluminium clamp
SEATPOST	Velomann, lenght: 350mm-15", 400mm-17/19/21", diam.27.2mm, 0mm seatback
SADDLE	Velomann, manganese rail, lenght 277mm x width 144mm

MAGMA 9.0 | DEORE 1X11SP | YRBR9



The image shown is indicative only. Components and graphic detail may differ from actual model. Bianchi reserves the right to amend specifications and/or prices.

COLOR	6K: CK16/ Black-White Full Glossy
FRAME	Magma 29" alu, 1,1/8" HT, BSA 68mm, seatpost diam. 27,2mm, low clamp FD diam. 31,8mm bottom pull or Side-Swing, PM 160mm, dropouts 9x135mm QR, internal cable routing, sizes 15-17-19-21" Size: 38-43- 48-53
SEATPOST CLAMP	339QX diam. 31,8mm, alloy clamp & lever
HEADSET	Fsa TH888 forged steel cups ID diam.34mm, stack height 12,8+11=23,8mm, w/15mm cap
FORK	Rock Shox Judy TK 29" 100mm w/Remote Lockout,1,1/8" steel HT, alloy crown, coil spring w/pre-load adjust, steel 30mm stanchions, magnesium lowers w/PM 160mm disc mount, 9mm QR
SHIFTER	Deore SL-M5100-R 1x11, clamp band
REAR DERAILLEUR	Shimano Deore RD-M5100 1x11sp, 11-51T Max
CRANKSET	Shimano FC-M5100-1, 32T, crank length: 170mm-15", 175mm-17/21"
BOTTOM BRACKET	included in the crankset
CHAIN	Kmc X11 EPT finish, 11sp
CASSETTE / FREEWHEEL	Shimano CS-M5100-11, 11sp, 11-13-15-18-21-24-28-33-39-45-51T

BRAKE	Shimano BR-MT200, resin pad
DISC ROTOR	Shimano SM-RT10, 160mm front & rear, Center Lock, for resin pad only
FRONT HUB	Formula CL-1420 for Center Lock, 32h 100mm OLD, loose balls, axle length 108mm, w/QR
REAR HUB	Formula CL-1422 for Center Lock, 32h 135mm OLD, loose balls, axle length 145mm, w/QR
RIM/WHEELSET	VelomannDP2.5, 622x25c, pin joint, 32h, anodized, no eyelet, Presta valve hole
TIRE	Kenda Booster 29x2.20, DTC compound, 30Tpi, wire, ETRTO 56-622
STEM	Velomann 3D forged Alloy 6061, +/-7°, 1.1/8mm, diam. 31.8mm, ext: 80mm-15/17", 90mm-19/21"
HANDLEBAR	Velomann Flat top DB Alloy 6061-T6, width 720mm, diam. 31,8mm, 9° backsweep
GRIP / TAPE	T-one T-GP48B, one piece grip, TPR material, 130mm
SEATPOST	Velomann AL2014 shaft w/alloy head, diam. 27.2mm, 0mm seatback, length 350mm
SADDLE	Velomann, steel rails, PVC soft touch cover, 140mm width

MAGMA 9.2 | ALIVIO 2X9SP | YRBW2



The image shown is indicative only. Components and graphic detail may differ from actual model. Bianchi reserves the right to amend specifications and/or prices.

COLOR	6K: CK16/ Black-White Full Glossy MB: Black Frame/ Silver-Yellow Dec Matt
FRAME	Magma 29" alu, 1,1/8" HT, BSA 68mm, seatpost diam. 27,2mm, low clamp FD diam. 31,8mm bottom pull or Side-Swing, PM 160mm, dropouts 9x135mm QR, internal cable routing, sizes 15-17-19-21" Size: 38-43- 48-53
SEATPOST CLAMP	339QX diam. 31,8mm, alloy clamp & lever
HEADSET	Fsa TH888 forged steel cups ID diam.34mm, stack height 12,8+11=23,8mm, w/15mm cap
FORK	XCM HLO DS 29"" 100mm, with HLO Hydraulic lockout, 1-1/8"" steer HT, alloy crown, coil spring w/pre-load adjust, steel 30mm stanchions, alloy lowers w/PM 160mm disc mount, 9mm QR
SHIFTER	Shimano Alivio SL-M3100 2x9sp
REAR DERAILLEUR	Shimano Alivio RDM3100 SGS 9sp top-normal, direct attachment, Shadow Design, max 11-36T
FRONT DERAILLEUR	Shimano FD-M2020-TS low clamp diam. 31,8mm, dual pull, 64/69°, for 36T w/14T capacity, CL 48.8/51.8mm
CRANKSET	Shimano FC-MT101-2, 36/22T, crank length: 170mm-15/17", 175mm-19/21"
BOTTOM BRACKET	Shimano BB-UN101, Axle LL123 (122,5mm)
CHAIN	Kmc HV900 Z9 9sp
CASSETTE / FREEWHEEL	Shimano HG200-9, 11-13-15-17-20-23-26-30-36T

BRAKE	Shimano BR-MT200, resin pad
DISC ROTOR	Shimano SM-RT10, 160mm front & rear, Center Lock, for resin pad only
FRONT HUB	Formula CL-1420 for Center Lock, 32h 100mm OLD, loose balls, axle length 108mm, w/QR
REAR HUB	Formula CL-1422 for Center Lock, 32h 135mm OLD, loose balls, axle length 145mm, w/QR
RIM/WHEELSET	VelomannDP2.5, 622x25c, pin joint, 32h, anodized, no eyelet, Presta valve hole
TIRE	Kenda Booster 29x2.20, DTC compound, 30Tpi, wire, ETRTO 56-622
STEM	Velomann ST92A +/-7°, 1.1/8", diam.31.8mm, ext: 80mm-15/17" and 90mm-19/21", 3D forged alloy 6061
HANDLEBAR	Velomann rise MTB479A, width 720mm, diam.31,8mm, rise 15mm, backsweep 9°, PG Alloy 6061 sandblasted anodized
GRIP / TAPE	T-one T-GP48B, one piece grip, TPR material, 130mm
SEATPOST	Velomann AL2014 shaft w/alloy head, diam. 27.2mm, 0mm seatback, length 350mm
SADDLE	Velomann, steel rails, PVC soft touch cover, 140mm width

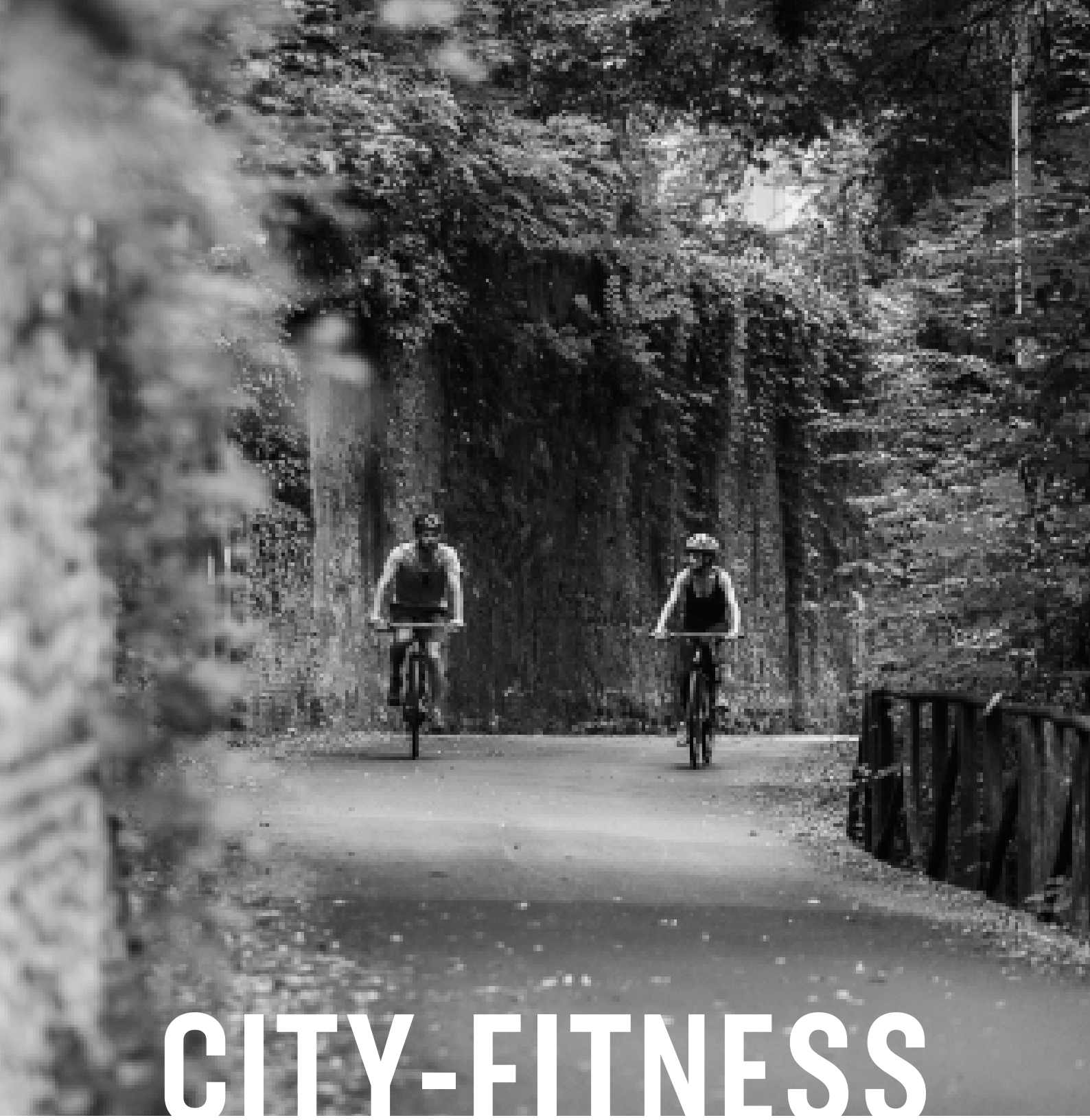

CITY-FITNESS

C SPORT | ACERA 24SP | YRBD3



The image shown is indicative only. Components and graphic detail may differ from actual model. Bianchi reserves the right to amend specifications and/or prices.

COLOR	CC: CK16/Dark Turquoise Full Glossy C9: Rocks Sand/Black Matt/Glossy
FRAME	C-Sport alu disc, 700C Old 135mm, integrated cable routing, Smooth welding, 1.1/8" headtube (semi-integrated down HT tube and integrated in top HT tube). Seat tube 31.6mm, size: 43,47,51,55,59
SEATPOST CLAMP	MX-112C alloy, diam. 31,8mm
HEADSET	Fsa No.8B/ZS4D 1.1/8" Semi-Integrated lower part + Integrated upper part, w/cap 15mm
FORK	Bianchi Alu Disc, 1.1/8", Post mount, max tire size 700x40c
SHIFTER	Disc Brake Assembled Set, ST-EF505(L), BR-MT200(F), W/O ADAPTER, RESIN PAD, 750MM HOSE,Disc Brake Assembled Set/J-kit, ST-EF505(8R), 8SPD, BR-MT200(R), W/O ADAPTER, RESIN PAD, 1550MM HOSE
REAR DERAILLEUR	Shimano Acera RD-M360-L SGS 8sp, direct attachment
FRONT DERAILLEUR	Shimano Tourney FD-TY700-TS3, Top-Swing, Dual-Pull, Band Type (34.9mm), 63-66°, For 42T, CL: 47.5/50mm
CRANKSET	Shimano FC-TY301 42x34x24T, Crank length: 170mm-43/47cm, 175mm-51/55cm
BOTTOM BRACKET	Shimano BB-UN101, Spindle:Square Type, Shell:BSA 68mm,Spindle:122.5mm
CHAIN	Kmc Z-72 8sp
CASSETTE / FREEWHEEL	Shimano CS-HG200-8, 8sp, 12-14-16-18-21-24-28-32T

BRAKE	Shimano BR-MT200, Resin pad
BRAKE LEVER	Included w/brakeset
DISC ROTOR	Shimano SM-RT10 diam. 160mm, Center Lock, Resin Pad only
FRONT HUB	Formula CL-1420 Center Lock, 32hole, 14G, OLD 100mm, with QR
REAR HUB	Formula CL-1422 Center Lock, 32hole, 14G, OLD 135mm, with QR
RIM/WHEELSET	Velomann ATD500 disc version, alloy, 700c 622x19, 32h, tubeless ready
TIRE	Kenda Kwick Tendril 700x38, 60Tpi, w/Kshield 3mm antipunctures insert
STEM	Velomann ST69A 3D forged 6061 Alloy, 12° 31,8mm 1.1/8", ext: 70mm-43cm, 10mm-47/51cm, 120mm-55/59cm
HANDLEBAR	Velomann Alloy 6061 DB, 620mm, flat bar, 9° bend, 31,8mm
GRIP / TAPE	Bianchi Ergonomic Double density, Black/CK
SEATPOST	Velomann SP02.1 Alloy shaft AL6061, alloy head, 15mm offset, 31,6mm
SADDLE	Selle Royal, 269mm x 146mm, steel rail, black-ck semi PU cover
PEDALS	Included

C SPORT | ACERA 24SP | YRBD9



T

COLOR	C9: Rocks Sand/Black Matt/Glossy
FRAME	C-Sport step through alu disc, 700C Old 135mm, integrated cable routing, Smooth welding, 1.1/8" head tube (semi-integrated down HT tube and integrated in top HT tube). Seat tube 31.6mm, size: 43,47,51,55
SEATPOST CLAMP	MX-112C alloy, diam. 31,8mm
HEADSET	Fsa No.8B/ZS4D 1.1/8" Semi-Integrated lower part + Integrated upper part, w/cap 15mm
FORK	Bianchi Alu Disc, 1.1/8", Post mount, max tire size 700x40c
SHIFTER	Shimano ST-EF505 3x8sp
REAR DERAILLEUR	Shimano Acera RD-M360-L SGS 8sp, direct attachment
FRONT DERAILLEUR	Shimano Tourney FD-TY700-TS3, Top-Swing, Dual-Pull, Band Type (34.9mm), 63-66°, For 42T, CL: 47.5/50mm
CRANKSET	Shimano FC-TY301 42x34x24T, Crank length: 170mm-43/47cm, 175mm-51/55cm
BOTTOM BRACKET	Shimano BB-UN101, Spindle:Square Type, Shell:BSA 68mm,Spindle:122.5mm
CHAIN	Kmc Z-72 8sp
CASSETTE / FREEWHEEL	Shimano CS-HG200-8, 8sp, 12-14-16-18-21-24-28-32T

BRAKE	Shimano BR-MT200, Resin pad
BRAKE LEVER	Included w/brakeset
DISC ROTOR	Shimano SM-RT10 diam. 160mm, Center Lock, Resin Pad only
FRONT HUB	Formula CL-1420 Center Lock, 32hole, 14G, OLD 100mm, with QR
REAR HUB	Formula CL-1422 Center Lock, 32hole, 14G, OLD 135mm, with QR
RIM/WHEELSET	Velomann ATD500 disc version, alloy, 700c 622x19, 32h, tubeless ready
TIRE	Kenda Kwick Tendril 700x38, 60Tpi, w/Kshield 3mm antipunctures insert
STEM	Velomann ST69A 3D forged 6061 Alloy, 12° 31,8mm 1.1/8", ext: 70mm-43cm, 10mm-47/51cm, 120mm-55/59cm
HANDLEBAR	Velomann Alloy 6061 DB, 620mm, flat bar, 9° bend, 31,8mm
GRIP / TAPE	Bianchi Ergonomic Double density, Black/CK
SEATPOST	Velomann SP02.1 Alloy shaft AL6061, alloy head, 15mm offset, 31,6mm
SADDLE	Selle Royal black-ck cover

C SPORT | ALTUS 24SP | YRB69



The image shown is indicative only. Components and graphic detail may differ from actual model. Bianchi reserves the right to amend specifications and/or prices.

COLOR	C9: Graphite/Black Matt
FRAME	C-SPORT Gent alu disc frame. 700C OLD 135mm, No Pivot, DISC version, integrated cable routing, Smooth Welding, 1.1/8" aheadset (semintegrated down HT tube and integrated in top top HT tube), seat tube diam. 31.6mm, size: 43,47,51,55
SEATPOST CLAMP	MX-112C alloy, diam.34.9mm
HEADSET	Fsa No.8B/ZS4D 1.1/8" Semi-Integrated lower part + Integrated upper part, w/cap 15mm
SHIFTER	Shift/Brake Lever, ST-TX800-L, Tourney TX, Left, 3-Speed 1800mm Inner EZ-FIRE PLUS, 2F-Steel/Resin, For V-Brake, Black, Bulk Shift/Brake Lever, ST-TX800-R, Tourney TX, Right, 8-Speed 2050mm Inner EZ-FIRE PLUS, 2F-Steel/Resin, For V-Brake, Black, Bulk
REAR DERAILLEUR	Shimano RD-M310-L, Altus 8sp, Direct Attachment
FRONT DERAILLEUR	Shimano FD-TY700-TS3, Tourney, Top-Swing, Dual-Pull, For Rear 8sp, Band Type (34.9mm), 63-66°, For 42T, CL: 47.5/50mm
CRANKSET	Shimano FC-TY301, 42x34x24T, crank lenght: 170mm-43/47cm, 175mm-51/55/59cm
BOTTOM BRACKET	Shimano BB-UN101, Spindle:Square Type, Shell:BSA 68mm,Spindle:122.5mm

CHAIN	Kmc Z-72 8sp
CASSETTE / FREEWHEEL	Shimano CS-HG200-8, 8sp, 12-14-16-18-21-24-28-32T
BRAKE	Shimano BR-TX805, Tourney TX, Front or Rear W/O Adapter
BRAKE LEVER	Included in L/Shifter
FRONT HUB	Formula CL-1420 Center lock, 32hole, 14G, OLD 100mm, with QR
REAR HUB	Formula CL-1422 Center lock, 32hole, 14G, OLD 135mm, with QR
RIM/WHEELSET	Alex Rim ATD500 disc version, alloy, 700c 622x19 32H, tubeless ready
TIRE	Kenda Kwick Tendril , 700x38c ,30Tpi
STEM	3D forged 6061 Alloy, 12° 31,8mm 28,6mm, ext: 70mm -43cm, 100mm- 47/51, 120mm- 55cm/59cm
HANDLEBAR	Alloy 6061 DB, widt: 620mm, flat bar, 9° bend, diam. 31.8mm
GRIP / TAPE	Bianchi Ergonomic Double, 131,6mm
SEATPOST	AL6061 shaft, alloy head, 15mm offset, diam. 31.6mm
SADDLE	Selle Royal, 269mm x 146mm

C SPORT | STEP THRUGH ALTUS 24SP | YRB63



The image shown is indicative only. Components and graphic detail may differ from actual model. Bianchi reserves the right to amend specifications and/or prices.

COLOR	CC: CK16/Dark CK16 Glossy
FRAME	C-SPORT Step Through alu disc frame, 700C OLD 135mm, No Pivot, DISC version, integrated cable routing, Smooth Welding, 1.1/8" aheadset (semintegrated down HT tube and integrated in top top HT tube), seat tube diam.31.6mm, size:43,47,51
SEATPOST CLAMP	MX-112C alloy, diam.34.9mm
HEADSET	Fsa No.8B/ZS4D 1.1/8" Semi-Integrated lower part + Integrated upper part, w/cap 15mm
FORK	Alu Disc, 1.1/8", Post mount, max tire size 700x40c
SHIFTER	Shift/Brake Lever, ST-TX800-L, Tourney TX, Left, 3-Speed 1800mm Inner EZ-FIRE PLUS, 2F-Steel/Resin, For V-Brake, Black, Bulk Shift/Brake Lever, ST-TX800-R, Tourney TX, Right, 8-Speed 2050mm Inner EZ-FIRE PLUS, 2F-Steel/Resin, For V-Brake, Black, Bulk
REAR DERAILLEUR	Shimano RD-M310-L, 8sp, Direct Attachment
FRONT DERAILLEUR	Shimano FD-TY700-TS3, Tourney, Top-Swing, Dual-Pull, 8sp, Band Type (34.9mm), 63-66°, For 42T, CL: 47.5/50mm
CRANKSET	Shimano FC-TY301, 42x34x24T, Crank lenght: 170mm-43/47cm, 175mm-51/55/59cm
BOTTOM BRACKET	Shimano BB-UN101, Spindle:Square Type, Shell:BSA 68mm,Spindle:122.5mm

CHAIN	Kmc Z-72 8sp
CASSETTE / FREEWHEEL	Shimano CS-HG200-8, 8sp, 12-14-16-18-21-24-28-32T
BRAKE	Shimano BR-TX805, Tourney TX, Front or Rear W/O Adapter
BRAKE LEVER	Included in L/Shifter
FRONT HUB	Formula CL-1420 Center lock, 32hole, 14G, OLD 100mm, w/QR
REAR HUB	Formula CL-1422 Center lock, 32hole, 14G, OLD 135mm, w/QR
RIM/WHEELSET	Alex Rim ATD500 disc version, alloy, 700c 622x19, 32h, tubeless ready
TIRE	Kenda Kwick Tendril , 700x38c , 30Tpi
STEM	3D forged 6061 Alloy, 12° 31,8mm 28,6mm, ext: 70mm-43cm, 100mm-47/51cm, 120mm-55/59cm
HANDLEBAR	Alloy 6061 DB, 620mm, flat bar, 9° bend, diam. 31.8mm
GRIP / TAPE	Bianchi Ergonomic Double, 131,6mm
SEATPOST	AL6061 shaft, alloy head, 15mm offset, diam. 31.6mm
SADDLE	Selle Royal black-ck cover

SPILLO DELUXE | TOURNEY 21SP | YEB5L



The image shown is indicative only. Components and graphic detail may differ from actual model. Bianchi reserves the right to amend specifications and/or prices.

COLOR	LK: Celeste Vintage
FRAME	Spillo Rubino Deluxe 28"Rigid Alloy 6061 1.1/8" size: 47-55, O.L.D.135mm
SEATPOST CLAMP	Alloy Silver Dia:31.8mm Quick-Release, Silver
HEADSET	1.1/8"X26T Steel Silver
FORK	28"Road 1.1/8"
SHIFTER	Shimano 7-Speed Ez-Fire plus, 2F-alloy, for V- Brake, black, Index Wire/2050mm Left Shifter 3-Speed Ez-Fire plus, 2F-alloy, for V-Brake, black, Index Wire/1800mm
REAR DERAILLEUR	Shimano, RD-TY500, Tourney, 6/7-speed, diretc attachement type, w/wheel type cable guide, bulk
FRONT DERAILLEUR	Shimano, FD-TY510-TS3, Tourney, top-swing, dual-pull, for rear 6/7speed, band type (w/31.8mm adapter), CS angle:63-66 for 48T.CL:47.5/50mm
CRANKSET	Crankset TCXE6-VZ(A4P6) 48X38X28 black/steel silver/steel silver
BOTTOM BRACKET	CH 52-68 diagonal cotterless/bolt L:127mm 4pcs w/ bolt ENM
CHAIN	KMC Z51 1/2"x 3/32" 7-speed
CASSETTE / FREEWHEEL	Shimano AMFTZ5007428 7-speed 14-28 w/thread
BRAKE	V-brake set HJ- 621ADX-SV silver Al. L:103mm 90/2 pipes ENM w/ ID 5mm Pipe cap

BRAKE LEVER	included in the shifter
FRONT HUB	KT-A15F Alloy silver 36H, silver QR, MQSP141NSI A:109-B:126-C:149 M9X100X108
REAR HUB	KT-A1ER Alloy Lathing natural/36H /quick- release 135X145 Threaded FW:40,5mm
RIM/WHEELSET	28/622X19 Freeway D-Wall Al balck 36H D:6.5 HBP
TIRE	700X35C 37-622 C-1880 Xpedium
STEM	MTS-C299N-5 (C297) Adjustable Alloy High polished Silver E:90 DIA:25.4 L:180mm
HANDLEBAR	HL-NR-AL-16 High polished an. Silver alloy W:590 R:26 DIA:25.4 BS:33 DG silver
SEATPOST	SP-242 Alloy silver L:350mm DIA:27.2mm
SADDLE	Selle Royal RIO renna Brown (8073), RVS, silver steel rail, w/clamp
PEDALS	body/PP-Black 2#, 9/16" Boron, BS Ball-Type EN
FRONT LIGHT	Spanninga JOS Illico
REAR LIGHT	SPARK RED
KICKSTAND	CD-122 Alloy, 20"-28" adjustable, Silver/esge black allen bolt dacromet
MUDGUARD / STAY	28" RAPIDO BIA2822-00177 46mm Silver foil,1Nose rear mudflap aid sliding bridge zinc coated

SPILLO DELUXE | TOURNEY 21SP | YEB5M



The image shown is indicative only. Components and graphic detail may differ from actual model. Bianchi reserves the right to amend specifications and/or prices.

COLOR	LK: Celeste Vintage
FRAME	Spillo Rubino Deluxe 28"Rigid Step Through Alloy 6061 1.1/8" size 43-47-51, O.L.D.135mm
SEATPOST CLAMP	Alloy Silver Dia:31.8mm Quick-Release, Silver
HEADSET	1.1/8"X26T Steel Silver
FORK	28"Road 1.1/8"
SHIFTER	Shimano 7-Speed Ez-Fire plus, 2F-alloy, for V- Brake, black, Index Wire/2050mm Left Shifter 3-Speed Ez-Fire plus, 2F-alloy, for V-Brake, black, Index Wire/1800mm
REAR DERAILLEUR	Shimano, RD-TY500, Tourney, 6/7-speed, diretc attachement type, w/wheel type cable guide, bulk
FRONT DERAILLEUR	Shimano, FD-TY510-TS3, Tourney, top-swing, dual-pull, for rear 6/7speed, band type (w/31.8mm adapter), CS angle:63-66 for 48T.CL:47.5/50mm
CRANKSET	Crankset TCXE6-VZ(A4P6) 48X38X28 black/steel silver/steel silver
BOTTOM BRACKET	CH 52-68 diagonal cotterless/bolt L:127mm 4pcs w/bolt ENM
CHAIN	KMC Z51 1/2"x 3/32" 7-speed
CASSETTE / FREEWHEEL	Shimano AMFTZ5007428 7-speed 14-28 w/thread
BRAKE	V-brake set HJ- 621ADX-SV silver Al. L:103mm 90/2 pipes ENM w/ ID 5mm Pipe cap

BRAKE LEVER	included in the shifter
FRONT HUB	KT-A15F Alloy silver 36H, silver QR, MQSP141NSI A:109-B:126-C:149 M9X100X108
REAR HUB	KT-A1ER Alloy Lathing natural/36H /quick- release 135X145 Threaded FW:40,5mm
RIM/WHEELSET	28/622X19 Freeway D-Wall Al balck 36H D:6.5 HBP
TIRE	700X35C 37-622 C-1880 Xpedium
STEM	MTS-C299N-5 (C297) Adjustable Alloy High polished Silver E:90 DIA:25.4 L:180mm
HANDLEBAR	HL-NR-AL-16 High polished an. Silver alloy W:590 R:26 DIA:25.4 BS:33 DG silver
SEATPOST	SP-242 Alloy silver L:350mm DIA:27.2mm
SADDLE	Selle Royal RIO renna Brown (8073), RVS, silver steel rail, w/clamp
PEDALS	body/PP-Black 2#, 9/16" Boron, BS Ball-Type EN
FRONT LIGHT	Spanninga JOS Illico
REAR LIGHT	SPARK RED
KICKSTAND	CD-122 Alloy, 20"-28" adjustable, Silver/esge black allen bolt dacromet
MUDGUARD / STAY	28" RAPIDO BIA2822-00177 46mm Silver foil,1Nose rear mudflap aid sliding bridge zinc coated

#RIDEBIANCHI

BIANCHI

F.I.V. E BIANCHI S.P.A
VIA DELLE BATTAGLIE, 5 24047 TREVIGLIO / BG

BIANCHI.COM