Bianchi

TECHNICAL BOOK

ROAD

GRAVEL

MTB

ACTIVE

E-BIKES

rev. 17/12/2025



ROAD

RACING | ENDURANCE | CYCLOCROSS

ROAD RACING AERO

OLTRE RC

OLTRE PRO

OLTRE COMP

OLTRE RACE

OLTRE RC | OLTRE PRO | OLTRE COMP

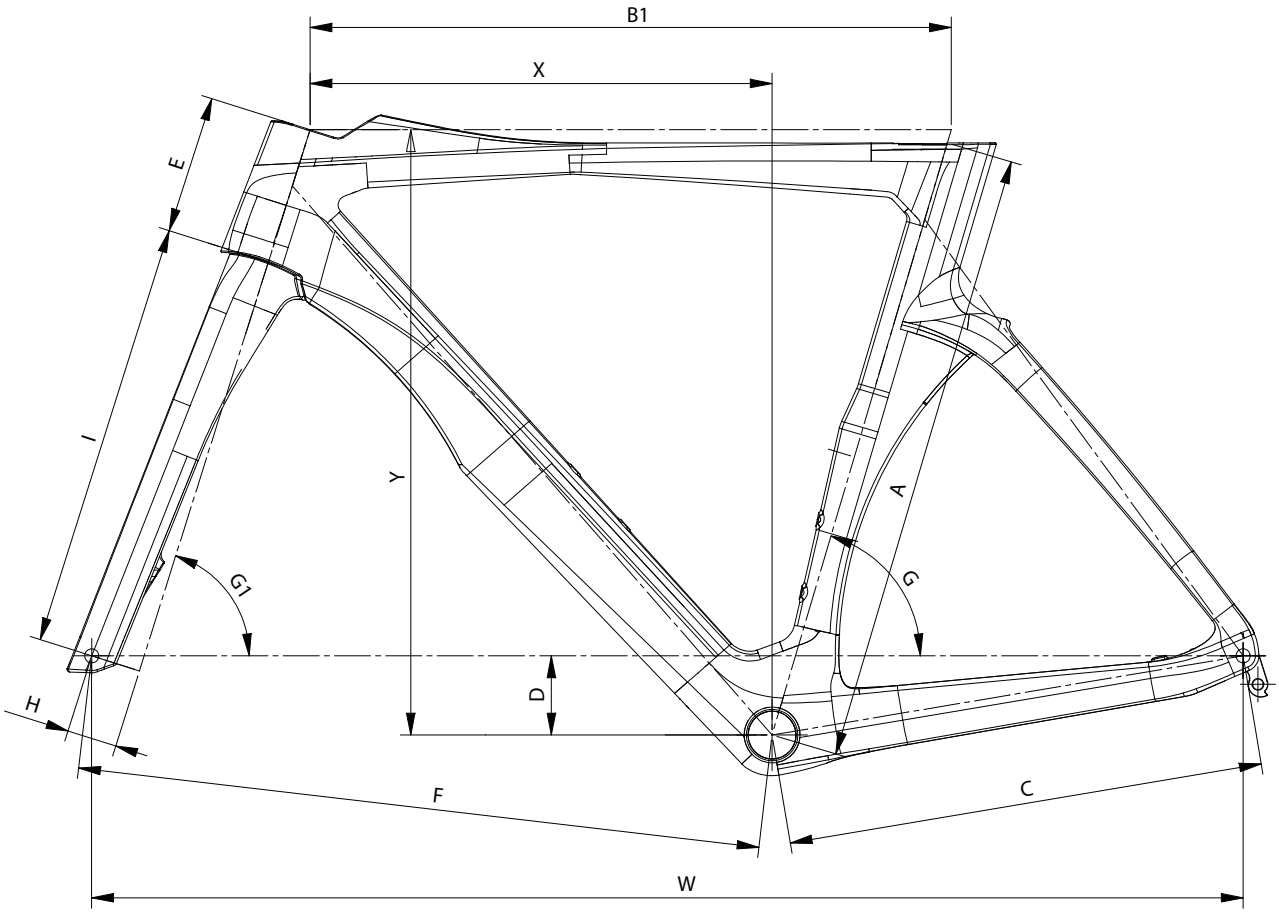

Oltre RC / Oltre PRO / Oltre COMP													
SIZE	A	B1	C	D	E	F	G	G1	H	I	X	Y	WB
470	450	515	410	58	83	579	74.5°	70.5°	43	368	385	470	982
500	480	525	410	58	88	581	74.5°	71.5°	43	368	392	478	983
530	510	536	410	68	103	582	74°	72°	43	368	393	504	984
550	530	550	410	68	118	588	73.5°	72.5°	43	368	397	520	988
570	550	560	412	68	133	593	73.5°	73°	43	368	402	536	996
590	570	575	412	68	153	603	73°	73°	43	368	406	555	1005

OLTRE TEAM REPLICA RC | DURA-ACE DI2 12SP | YUB03



The image shown is indicative only. Components and graphic detail may differ from actual model. Bianchi reserves the right to amend specifications and/or prices.

COLORS	ZE - Metallic Celeste/CK16 - CK16 [Full Glossy]
FRAME	Bianchi Oltre RC carbon High Modulus, Aero shape, only electronic groupsets, fully internal cable routing, headset 1"1/4 - 1"1/4, direct mount brakes, BB-PressFit 86.5x41 sizes 47-50-53-55-57-59
SEATPOST CLAMP	Bianchi Custom
SEATPOST	Bianchi Oltre, full carbon, aero shape, 20 mm offset length: 280 mm (47 cm); 300 mm (50-55 cm); 350 mm (57-59 cm)
HEADSET	FSA No. 54 - upper bearing MR137; lower bearing MR082R
FORK	Bianchi Oltre RC full Carbon High Modulus, Aero shape, integrated head, disc, 1"1/4 head, 12x100 mm thru axle
STEM	Bianchi Reparto Corse integrated handlebar, Aero bar, Carbon, for internal cable routing, drop 125 mm, reach 80 mm Size: 90/400 mm (47-50 cm) ; 100/420 mm (53 cm) ; 110/420 mm (55-57 cm); 120/440 mm (59 cm)
HANDLEBAR	Included in the stem
GRIP / TAPE	Bianchi Arrow premium tape, 2.5 mm thickness, Celeste
SADDLE	Selle Italia SLR Boost Pro Team, Carbon, Superflow, Length 248 mm, Width 130 mm

WHEELSET	Vision Metron60 SL, profile height 60 mm, 2 to 1 spoke pattern, Aero spokes, HG11 body, weight 1550 g
TIRE	Vittoria Corsa Pro 28-622, TLR, G2.0, 320 TPI, Para/Black
SHIFTER	Shimano Dura-Ace Di2, shifter lever ST-R9270
REAR DERAILLEUR	Shimano Dura-Ace Di2, RD-R9250, 12sp
FRONT DERAILLEUR	Shimano Dura-Ace Di2, FD-R9250
CRANKSET	FSA K-Force Team with PowerBox Powermeter, 52x36T Crank length: 165 mm (47-50 cm); 170 mm (53-55 cm); 172.5 mm (57-59 cm)
BOTTOM BRACKET	FSA BB386 EVO
CHAIN	Shimano Dura-Ace, CN-M9100
CASSETTE / FREEWHEEL	Shimano Dura-Ace, CS-R9200 11-30T, 11-12-13-14-15-16-17-19-21-24-27-30T
BRAKE LEVER	Included in the shifter
BRAKE	Shimano BR-R9270 Hydraulic disc brake
FRONT DISK ROTOR	Shimano RT-CL900 Center Lock with Ice Tech, 160 mm
REAR DISK ROTOR	Shimano RT-CL900 Center Lock with Ice Tech, 160 mm

OLTRE RC | SRAM RED ETAP AXS 12SP | YUB20



The image shown is indicative only. Components and graphic detail may differ from actual model. Bianchi reserves the right to amend specifications and/or prices.

COLOR	ZE - Metallic Celeste/CK16 - full glossy ZW - Carbon UD/Metallic Celeste - full matt
FRAME	Oltre RC carbon aero shape, electronic drivetrain only, headset 1.1/4-1.1/4,BB-PressFit 86,5x41mm, integrated seat clamp, for flat mount caliper, internal cable routing for disc brakes, thru axle 12x142mm sizes 47-50-53-55-57-59cm
SEATPOST CLAMP	included in the frame
HEADSET	Fsa No. 54 - MR137 - ACB 1-1/4diam.46.9x diam.37x7
FORK	Full Carbon aero, Disc brakes, integrated head 1.1/4, flat mount caliper, thru axle 12x100mm
SHIFTER	Sram Red eTap AXS E1 Hydraulic Disc Brake
REAR DERAILLEUR	Sram Red eTap AXS E1 12sp
FRONT DERAILLEUR	Sram Red eTap AXS E1
CRANKSET	Sram Red E1, 12sp, Quark power meter, 48/35, Crank Length: 170mm-47/53cm, 172.5mm-55/59cm
BOTTOM BRACKET	Sram Press fit Road 86,5x41
CHAIN	Sram Red E1, 114 links
CASSETTE / FREEWHEEL	Sram Red XG 1290, E1, 10-33, 10-11-12-13-14-15-17-19-21-24-28-33T
BRAKE	Sram included in the shifter
DISC ROTOR	Sram Paceline X, centerlock, 160mm front and rear

RIM/WHEELSET	Reparto Corse Carbon SPB 50mm profile, 700x21c (front), Reparto Corse Carbon SPB 65mm profile, 700x21c, XDR body (rear), 3K and UD high strength carbon fiber, tubeless ready, weight per set: 1520 gr (+/-5%)
TIRE	Pirelli P ZERO™ Race SL TLR , 28-622, 120 tpi
STEM	Integrated handlebar Integrated Aero bar, material Carbon, drop 125mm, reach 80mm, Di2 compatible Ext: 90x400-47/50cm ; 100x420-53cm ; 110x420-55/57cm; 120x440-59cm
HANDLEBAR	included in the stem
GRIP / TAPE	Bianchi Arrow premium tape, 2.5mm thickness, black
SEATPOST	Oltre Full Carbon Aero special dimension seatpost, 20mm offset, length: 280mm-47cm, 300mm-50/55cm, 350mm-57/59cm
SADDLE	Bianchi RC139 Carbon Air, weight 168g, Lenght: 250mm, Wide: 139mm, Rails: 7x9,3mm

OLTRE RC | DURACE DI2 12SP | YUB21



The image shown is indicative only. Components and graphic detail may differ from actual model. Bianchi reserves the right to amend specifications and/or prices.

COLOR	ZE - Metallic Celeste/CK16 - full glossy ZW - Carbon UD/Metallic Celeste - full matt
FRAME	Oltre RC carbon aero shape, electronic drivetrain only, headset 1.1/4-1.1/4,BB-PressFit 86,5x41mm, integrated seat clamp, for flat mount caliper, internal cable routing for disc brakes, thru axle 12x142mm sizes 47-50-53-55-57-59cm
SEATPOST CLAMP	included in the frame
HEADSET	Fsa No. 54 - MR137 - ACB 1-1/4diam.46.9x diam.37x7 Fsa TH970R - MR082R - SL Alloy ACB 1-1/4diam.46.8x diam.34x7
FORK	Full Carbon aero, Disc brakes, integrated head 1.1/4, flat mount caliper, thru axle 12x100mm
SHIFTER	Shimano Durace Di2 hydraulic disc brake for road, ST-R9270, BR-R9270, for 160mm rotor
REAR DERAILLEUR	Shimano Durace Di2 12sp, RD-R9250
FRONT DERAILLEUR	Shimano Durace Di2 12sp,FD-R9250
CRANKSET	Shimano, Durace 12sp, FC-R9200, 4iiii precision 3+ dual side power meter, 52x36T, Crank Length: 170mm-47/54cm, 172.5mm-55/59cm
BOTTOM BRACKET	Shimano, SM-BB92-41B, press fit for road
CHAIN	Shimano Durace 12sp, CN-M9100
CASSETTE / FREEWHEEL	Shimano Durace 12sp, CS-R9200, 11-12-13-14-15-16-17-19-21-24-27-30T

BRAKE	Shimano BR-R9270 Hydraulic disc brake, included in the shifter
BRAKE LEVER	included
DISC ROTOR	Shimano CL900, centerlock type w/Ice Tech, 160mm front and rear
RIM/WHEELSET	Reparto Corse Carbon SPB 50mm profile, 700x21c (front), Reparto Corse Carbon SPB 65mm profile, 700x21c, HG11 body (rear), 3K and UD high strength carbon fiber, tubeless ready, weight per set: 1520 gr (+/-5%)
TIRE	Pirelli P ZERO™ Race SL TLR , 28-622, 120 tpi
STEM	Integrated handlebar Integrated Aero bar, material Carbon, drop 125mm, reach 80mm, Di2 compatible Ext: 90x400-47/50cm ; 100x420-53cm; 110x420-55/57cm; 120x440-59cm
HANDLEBAR	included in the stem
GRIP / TAPE	Bianchi Arrow premium tape, 2.5mm thickness, black
SEATPOST	Oltre Full Carbon Aero special dimension seatpost, 20mm offset, length: 280mm-47cm, 300mm-50/55cm, 350mm-57/59cm
SADDLE	Bianchi RC139 Carbon Air, weight 168g, Lenght: 250mm, Wide: 139mm, Rails: 7x9,3mm

NEW

OLTRE RC | SUPER RECORD WRL 13SP | YVB22



The image shown is indicative only. Components and graphic detail may differ from actual model. Bianchi reserves the right to amend specifications and/or prices.

COLORS	ZE - Metallic Celeste/CK16 - CK16 [Full Glossy] ZW - Carbon UD/Metallic Celeste - Metallic Celeste [Full Matt]
FRAME	Bianchi Oltre RC carbon High Modulus, Aero shape, only electronic groupsets, fully internal cable routing, headset 1"1/4 - 1"1/4, direct mount brakes, BB-PressFit 86.5x41 sizes 47-50-53-55-57-59
SEATPOST CLAMP	Bianchi Custom
SEATPOST	Bianchi Oltre, full carbon, aero shape, 20 mm offset length: 280 mm (47 cm); 300 mm (50-55 cm); 350 mm (57-59 cm)
HEADSET	FSA No. 54 - upper bearing MR137; lower bearing MR082R
FORK	Bianchi Oltre RC full Carbon High Modulus, Aero shape, integrated head, disc, 1"1/4 head, 12x100 mm thru axle
STEM	Bianchi Reparto Corse integrated handlebar, Aero bar, Carbon, for internal cable routing, drop 125 mm, reach 80 mm Size: 90/400 mm (47-50 cm) ; 100/420 mm (53 cm) ; 110/420 mm (55-57 cm); 120/440 mm (59 cm)
HANDLEBAR	Included in the stem
GRIP / TAPE	Bianchi Arrow premium tape, 2.5 mm thickness, full black
SADDLE	Bianchi Reparto Corse RC139 Carbon Air, 3D printed padding for adaptive stiffness, length 250 mm, width 139 mm

WHEELSET	Bianchi Reparto Corse RC50R/RC65R SPBTech, Carbon rim, front: profile height 50 mm, rear: profile height 65 mm, 700x21c, 24h, 3K and UD carbon, Campagnolo body, weight: 1520 g
TIRE	Pirelli P Zero Race SL TLR, 28-622, 120 TPI
SHIFTER	Campagnolo Super Record WRL
REAR DERAILLEUR	Campagnolo Super Record WRL 13sp
FRONT DERAILLEUR	Campagnolo Super Record WRL
CRANKSET	Campagnolo Super Record Carbon, 52x36T, Powermeter Crank length: 165 mm (47-50 cm); 170 mm (53-55 cm); 172.5 mm (57-59 cm)
BOTTOM BRACKET	Campagnolo Quick Tech, Press-Fit 86.5x41
CHAIN	Campagnolo Super Record
CASSETTE / FREEWHEEL	Campagnolo Super Record, 11-36T
BRAKE LEVER	Campagnolo Super Record, included in the shifter
BRAKE	Campagnolo Super Record, Hydraulic disc brake
FRONT DISK ROTOR	Campagnolo 03 AFS 160 mm
REAR DISK ROTOR	Campagnolo 03 AFS 160 mm

OLTRE RC | FRAMESET | XTB05



The image shown is indicative only. Components and graphic detail may differ from actual model. Bianchi reserves the right to amend specifications and/or prices.

COLOR	ZE - Metallic Celeste/CK16 - full glossy ZW - Carbon UD/Metallic Celeste - full matt
FRAME	Oltre RC carbon aero shape, electronic drivetrain only, headset 1.1/4-1.1/4,BB-PressFit 86,5x41mm, integrated seat clamp, for flat mount caliper, internal cable routing for brakes, thru axle 12x142mm, compatible with 700x30 tire sizes 47-50-53-55-57-59cm
SEATPOST CLAMP	included in the frame
HEADSET	Fsa No. 54 - MR137 - ACB 1-1/4 diam.46.9 x diam.37x7 Fsa TH970R - MR082R - SL Alloy ACB 1-1/4 diam.46.8 x diam.34x7
FORK	Full Carbon aero, brakes, integrated head 1.1/4, flat mount caliper, thru axle 12x100mm, compatible with 700x30 tire

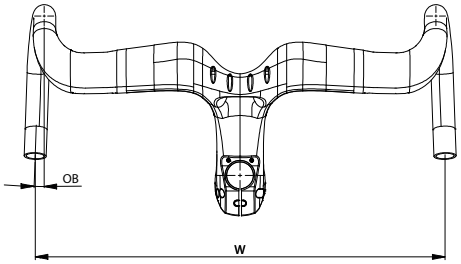

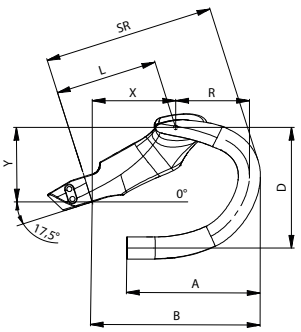

Oltre RC/PRO Integrated Handlebar										
Size	Width (W)	Lenght (L)	Reach (R)	Drop (D)	Stem/HB reach (SR)	Outward bend (OB)	X	Y	A	B
90x400	400	90	80,9	128,3	165,7	2°	72	71,5	143,6	164,5
90x420	420	90	80,9	128,3	165,7	2°	72	71,5	143,6	164,5
90x440	440	90	80,9	128,3	165,7	2°	72	71,5	143,6	164,5
100x400	400	100	79	129,7	173,6	2°	79,6	80,1	143,6	170,5
100x420	420	100	79	129,7	173,6	2°	79,6	80,1	143,6	170,5
100x440	440	100	79	129,7	173,6	2°	79,6	80,1	143,6	170,5
110x400	400	110	79	129,7	183,6	2°	90,1	80,1	143,6	181
110x420	420	110	79	129,7	183,6	2°	90,1	80,1	143,6	181
110x440	440	110	79	129,7	183,6	2°	90,1	80,1	143,6	181
120x400	400	120	79	129,7	193,6	2°	100,6	80,1	143,6	191,4
120x420	420	120	79	129,7	193,6	2°	100,6	80,1	143,6	191,4
120x440	440	120	79	129,7	193,6	2°	100,6	80,1	143,6	191,4
130x400	400	130	79	129,7	203,6	2°	111,1	80,1	143,6	202,1
130x420	420	130	79	129,7	203,6	2°	111,1	80,1	143,6	202,1
130x440	440	130	79	129,7	203,6	2°	111,1	80,1	143,6	202,1
140x400	400	140	79	129,7	213,6	2°	117,8	92	143,6	208,7
140x420	420	140	79	129,7	213,6	2°	117,8	92	143,6	208,7
140x440	440	140	79	129,7	213,6	2°	117,8	92	143,6	208,7

***Frame price does not include cockpit.**

OLTRE PRO | FORCE ETAP AXS 12SP | YUB27



The image shown is indicative only. Components and graphic detail may differ from actual model. Bianchi reserves the right to amend specifications and/or prices.

COLORS	ZF - Metallic Celeste/Graphite - Graphite [Full Matt] ZH - Carbon UD/Pearlized Iridescent - Pearlized Iridescent [Full Glossy]
FRAME	Bianchi Oltre PRO full carbon, with Bianchi CV system, Aero shape, only electronic groupsets, fully internal cable routing, headset 1"1/4 - 1"1/4, direct mount brakes, BB-PressFit 86.5x41 sizes 47-50-53-55-57-59
SEATPOST CLAMP	Bianchi Custom
SEATPOST	Bianchi Oltre, full carbon, aero shape, 20 mm offset length: 280 mm (47 cm); 300 mm (50-55 cm); 350 mm (57-59 cm)
HEADSET	FSA No. 54 - upper bearing MR137; lower bearing MR082R
FORK	Bianchi Oltre PRO full Carbon High Modulus, with Bianchi CV System, Aero shape, integrated head, disc, 1"1/4 head, 12x100 mm thru axle
STEM	Bianchi Reparto Corse integrated handlebar, Aero bar, Carbon, for internal cable routing, drop 125 mm, reach 80 mm Size: 90/400 mm (47-50 cm) ; 100/420 mm (53 cm) ; 110/420 mm (55-57 cm); 120/440 mm (59 cm)
HANDLEBAR	Included in the stem
GRIP / TAPE	Bianchi Arrow premium tape, 2.5 mm thickness, full black
SADDLE	Velomann Mitora 139 Lite, open flow, Carbon rails 7x9.1 mm, Carbon-reinforced nylon shell, length 250 mm, width 139 mm

WHEELSET	Velomann Plutonium, Carbon rim, 50 mm profile, 700x21c, 24h, XDR body
TIRE	Pirelli P Zero Race SL TLR, 28-622, 120 TPI
SHIFTER	Sram Force eTap AXS D2
REAR DERAILLEUR	Sram Force eTap AXS D2, 12sp
FRONT DERAILLEUR	Sram Force eTap AXS D2
CRANKSET	Sram Force D2, Quarq Power Meter, 48x35T Crank length: 170 mm (47-53 cm); 172.5 mm (55-59 cm)
BOTTOM BRACKET	Sram Press fit Road 86.5x41
CHAIN	Sram Force D1
CASSETTE / FREEWHEEL	Sram Force XG 1270 D1, 10-33, 10-11-12-13-14-15-17-19-21-24-28-33T
BRAKE LEVER	Included in the shifter
BRAKE	Sram Force D1, Hydraulic disc brake
FRONT DISK ROTOR	Sram Paceline X, Center Lock, 160 mm
REAR DISK ROTOR	Sram Paceline X, Center Lock, 160 mm

NEW

OLTRE PRO | FORCE ETAP AXS E1 PWM | YVB27



The image shown is indicative only. Components and graphic detail may differ from actual model. Bianchi reserves the right to amend specifications and/or prices.

COLORS	ZF - Metallic Celeste/Graphite - Graphite [Full Matt] ZH - Carbon UD/Pearlized Iridescent - Pearlized Iridescent [Full Glossy]
FRAME	Bianchi Oltre PRO full carbon, with Bianchi CV system, Aero shape, only electronic groupsets, fully internal cable routing, headset 1"1/4 - 1"1/4, direct mount brakes, BB-PressFit 86.5x41 sizes 47-50-53-55-57-59
SEATPOST CLAMP	Bianchi Custom
SEATPOST	Bianchi Oltre, full carbon, aero shape, 20 mm offset length: 280 mm (47 cm); 300 mm (50-55 cm); 350 mm (57-59 cm)
HEADSET	FSA No. 54 - upper bearing MR137; lower bearing MR082R
FORK	Bianchi Oltre PRO full Carbon High Modulus, with Bianchi CV System, Aero shape, integrated head, disc, 1"1/4 head, 12x100 mm thru axle
STEM	Bianchi Reparto Corse integrated handlebar, Aero bar, Carbon, for internal cable routing, drop 125 mm, reach 80 mm Size: 90/400 mm (47-50 cm) ; 100/420 mm (53 cm) ; 110/420 mm (55-57 cm); 120/440 mm (59 cm)
HANDLEBAR	Included in the stem
GRIP / TAPE	Bianchi Arrow premium tape, 2.5 mm thickness, full black
SADDLE	Velomann Mitora 139 Lite, open flow, Carbon rails 7x9.1 mm, Carbon-reinforced nylon shell, length 250 mm, width 139 mm

WHEELSET	Velomann Plutonium, Carbon rim, 50 mm profile, 700x21c, 24h, XDR body
TIRE	Pirelli P Zero Race SL TLR, 28-622, 120 TPI
SHIFTER	Sram Force AXS E1
REAR DERAILLEUR	Sram Force AXS E1, 12sp
FRONT DERAILLEUR	Sram Force AXS E1
CRANKSET	Sram Force E1, Quarq Power Meter, 48x35T Crank length: 165 mm (47-50 cm); 170 mm (53-55 cm); 172.5 mm (57-59 cm)
BOTTOM BRACKET	Sram Press fit Road 86.5x41
CHAIN	Sram Force E1
CASSETTE / FREEWHEEL	Sram Force XG 1270 E1, 10-33, 10-11-12-13-14-15-17-19-21-24-28-33T
BRAKE LEVER	Included in the shifter
BRAKE	Sram Force E1, Hydraulic disc brake
FRONT DISK ROTOR	Sram Paceline, Center Lock, 160 mm
REAR DISK ROTOR	Sram Paceline, Center Lock, 160 mm

OLTRE PRO | ULTEGRA DI2 12SP | YUB28



The image shown is indicative only. Components and graphic detail may differ from actual model. Bianchi reserves the right to amend specifications and/or prices.

COLOR	ZF - Metallic Celeste/Graphite - full matt ZH - Carbon UD/Pearlized Iridescent - full glossy
FRAME	Oltre PRO carbon w/Bianchi CV System aero shape, electronic drivetrain only, headset 1.1/4-1.1/4,BB-PressFit 86,5x41mm, integrated seat clamp, for flat mount caliper, internal cable routing for disc brakes, thru axle 12x142mm
SEATPOST CLAMP	included in the frame
HEADSET	Fsa No. 54 - MR137 - ACB 1-1/4diam.46.9x diam.37x7 Fsa TH970E - MR168 - Alloy ACB 1-1/4diam.46.8x diam.34x7
FORK	Full Carbon aero w/Bianchi CV System, Disc brakes, integrated head 1.1/4, flat mount caliper, thru axle 12x100mm
SHIFTER	Shimano Ultegra Di2 hydraulic disc brake for road, ST-R8170, BR-R8170, for 160mm rotor
REAR DERAILLEUR	Shimano Ultegra Di2 12sp, RD-R8150
FRONT DERAILLEUR	Shimano Ultegra Di2 12sp, FD-R8150
CRANKSET	Shimano, Ultegra 12sp, FC-R8100, 4iiii precision 3+ power meter, for rear 12- speed, 52x36T, Crank Length: 170mm-47/53cm, 172.5mm-55/59cm
BOTTOM BRACKET	Shimano, SM-BB72-41B, press fit for road, bearing, inner cover
CHAIN	Shimano, Ultegra 12 sp, CN-M8100
CASSETTE / FREEWHEEL	Shimano Ultegra, CS-R8100, 11-12-13-14-15-16-17-19-21-24-27-30T

BRAKE	Shimano BR-R8170 Hydraulic disc brake, included in the shifter
BRAKE LEVER	included
DISC ROTOR	Shimano CL900, centerlock type w/Ice Tech, 160mm front and rear
RIM/WHEELSET	Velomann Plutonium , 50mm profile, 700x21c, 24h, HG body
TIRE	Pirelli P ZERO™ Race SL TLR , 28-622, 120 tpi
STEM	Integrated handlebar Integrated Aero bar, material Carbon, drop 125mm, reach 80mm, Di2 compatible Ext: 90x400-47/50cm; 100x420-53cm; 110x420-55/57cm; 120x440-59cm
HANDLEBAR	included in the stem
GRIP / TAPE	Bianchi Arrow premium tape, 2.5mm thickness, black
SEATPOST	Oltre Full Carbon Aero special dimension seatpost, 20mm offset, length: 280mm-47cm, 300mm-50/55cm, 350mm-57/59cm
SADDLE	Velomann Mitora139 Lite, open flow, carbon rails 7x9,3mm, carbon-reinforced nylon, Wide: 139mm, Lenght: 250mm

OLTRE PRO | FRAMESET | XTB06I



The image shown is indicative only. Components and graphic detail may differ from actual model. Bianchi reserves the right to amend specifications and/or prices.

COLOR	ZF - Metallic Celeste/Graphite - full matt ZH - Carbon UD/Pearlized Iridescent - full glossy
FRAME	Oltre PRO carbon w/Bianchi System aero shape, electronic drivetrain only, headset 1.1/4-1.1/4,BB-PressFit 86,5x41mm, integrated seat clamp, for flat mount caliper, internal cable routing for brakes, thru axle 12x142mm, compatible with 700x30 tire sizes 47-50-53-55-57-59cm
SEATPOST CLAMP	included in the frame
HEADSET	Fsa No. 54 - MR137 - ACB 1-1/4 diam.46.9 x diam.37x7 Fsa TH970R - MR082R - SL Alloy ACB 1-1/4 diam.46.8 x diam.34x7
FORK	Full Carbon aero w/Bianchi System, brakes, integrated head 1.1/4, flat mount caliper, thru axle 12x100mm, compatible with 700x30 tire

*Frame price does not include cockpit.

OLTRE COMP | ULTEGRA DI2 12SP | YTB23



The image shown is indicative only. Components and graphic detail may differ from actual model. Bianchi reserves the right to amend specifications and/or prices.

COLOR	ZN - Metallic Celeste/Black - full glossy ZP - Velvet-Navy/Off White- full matt
FRAME	Oltre Comp, carbon, disc brakes, electronic and mechanical shifting compatible, internal cable routing 1.5-1.5 headset, BB-PressFit 86,5x41, flat mount brakes, thru axle 12x142mm sizes 47-50-53-55-57-59cm
SEATPOST CLAMP	included in the frame
HEADSET	Fsa TH-073E ACB 1.5 51.8x40x8
FORK	Full Carbon aero, disc brakes, integrated head 1,5, thru axle 12x100mm, compatible with 700x30 tire
SHIFTER	Shimano Ultegra Di2 hydraulic disc brake for road, ST-R8170, BR-R8170, for 160mm rotor
REAR DERAILLEUR	Shimano Ultegra Di2 12sp, RD-R8150
FRONT DERAILLEUR	Shimano Ultegra Di2 12sp, FD-R8150
CRANKSET	Shimano, Ultegra 12sp, FC-R8100, for rear 12- speed, 52x36T, Crank Length: 170mm-47/53cm, 172.5mm-55/59cm
BOTTOM BRACKET	Shimano, SM-BB72-41B, press fit for road, bearing, inner cover
CHAIN	Shimano, Ultegra 12 sp, CN-M8100
CASSETTE / FREEWHEEL	Shimano Ultegra, CS-R8100, 11-12-13-14-15-16-17-19-21-24-27-30T
BRAKE	Shimano BR-R8170 Hydraulic disc brake, included in the shifter

BRAKE LEVER	included
DISC ROTOR	Shimano center lock type w/Ice Tech, 160mm front rear
RIM/WHEELSET	Velomann Plutonium , 50mm profile, 700x21c, 24h, HG body
TIRE	Vittoria Rubino V 28-622 TLR full black G2.0, graphene + silica, 100TPI,
STEM	Velomann Aero stem, material alloy, Oversize, 1.1/8, size: 90mm-47/50cm, 100mm-53cm, 110mm-55/57cm, 120mm-59cm
HANDLEBAR	Velomann Aero Compact handlebar, alloy diam. 31,8mm, reach 74mm, drop 116mm, for fully internal cable routing Size: 400mm-47~53cm, 420mm-55~59cm
GRIP / TAPE	Bianchi Arrow premium tape, 2.5mm thickness, black
SEATPOST	Oltre Full Carbon Aero special dimension seatpost, 20mm offset, length: 280mm-47cm, 300mm50/55cm, 350mm-57/59cm
SADDLE	Velomann Mitora139, open flow, AISI rails 7x7mm, carbon-reinforced nylon, Wide: 139mm, Lenght: 250mm

OLTRE COMP | RIVAL ETAP AXS 12SP | YTB24



The image shown is indicative only. Components and graphic detail may differ from actual model. Bianchi reserves the right to amend specifications and/or prices.

COLOR	ZN - Metallic Celeste/Black - full glossy ZP - Velvet-Navy/Off White- full matt
FRAME	Oltre Comp, carbon, disc brakes, electronic and mechanical shifting compatible, internal cable routing 1.5-1.5 headset, BB-PressFit 86,5x41, flat mount brakes, thru axle 12x142mm sizes 47-50-53-55-57-59cm
SEATPOST CLAMP	included in the frame
HEADSET	Fsa TH-073E ACB 1.5 51.8x40x8
FORK	Full Carbon aero, disc brakes, integrated head 1,5, thru axle 12x100mm, compatible with 700x30 tire
SHIFTER	Sram RIVAL ETAP AXS D1 Hydraulic Disc Brake
REAR DERAILLEUR	Sram RIVAL ETAP AXS D1 MAX 36T
FRONT DERAILLEUR	Sram RIVAL ETAP AXS D1
CRANKSET	Sram RIVAL D1 DUB, 48/35, Crank Length: 170mm-47/53cm, 172.5mm-55/59cm
BOTTOM BRACKET	Sram Press fit Road 86,5x41
CHAIN	Sram RIVAL D1 12S
CASSETTE / FREEWHEEL	Sram CS XG 1250 D1 10-36T
BRAKE	Sram included in the shifter

DISC ROTOR	Sram Centerline, centerlock 160mm front and rear
RIM/WHEELSET	Velomann Plutonium , 50mm profile, 700x21c, 24h, XDR body
TIRE	Vittoria Rubino V 28-622 TLR full black G2.0, graphene + silica, 100TPI,
STEM	Velomann Aero stem, material alloy, Oversize, 1.1/8, size: 90mm-47/50cm, 100mm-53cm, 110mm-55/57cm, 120mm-59cm
HANDLEBAR	Velomann Aero Compact handlebar, alloy diam. 31,8mm, reach 74mm, drop 116mm, for fully internal cable routing Size: 400mm-47~53cm, 420mm-55~59cm
GRIP / TAPE	Bianchi Arrow premium tape, 2.5mm thickness, black
SEATPOST	Oltre Full Carbon Aero special dimension seatpost, 20mm offset, length: 280mm-47cm, 300mm50/55cm, 350mm-57/59cm
SADDLE	Velomann Mitora139, open flow, AISI rails 7x7mm, carbon-reinforced nylon, Wide: 139mm, Lenght: 250mm

NEW

OLTRE COMP | RIVAL ETAP AXS E1 | YVB24



The image shown is indicative only. Components and graphic detail may differ from actual model. Bianchi reserves the right to amend specifications and/or prices.

COLORS	ZN - Metallic Celeste - Black [Full Glossy] ZP - Velvet Navy - Off White [Full Matt]
FRAME	Bianchi Oltre Comp, full carbon, Aero shape, electronic and mechanical groupsets, fully internal cable routing, headset 1.5" - 1.5", flat mount brakes, BB-PressFit 86.5x41 sizes 47-50-53-55-57-59
SEATPOST CLAMP	Bianchi Custom
SEATPOST	Bianchi Oltre, full carbon, aero shape, 20 mm offset length: 280 mm (47 cm); 300 mm (50-55 cm); 350 mm (57-59 cm)
HEADSET	FSA TH-073E ACB 1.5 51.8x40x8
FORK	Bianchi Oltre COMP full carbon, Aero shape, integrated head 1.5", disc, 12x100 mm thru axle
STEM	Velomann Aero stem, alloy, Diameter 28.6 mm, Barbore 31.8 mm Size: 90 mm (47-50 cm); 100 mm (53 cm); 110 mm (55-57 cm); 120 mm (59 cm)
HANDLEBAR	Velomann Aero Compact handlebar, alloy, diameter 31.8 mm, reach 74 mm, drop 116 mm Size: 400 mm (47-53 cm); 420 mm (55-59 cm)
GRIP / TAPE	Bianchi Arrow premium tape, 2.5 mm thickness, full black
SADDLE	Velomann Mitora 139, AISI rail, width 139 mm, length 250 mm

WHEELSET	Velomann Plutonium, Carbon rim, 50 mm profile, 700x21c, 24h, XDR body
TIRE	Vittoria Rubino V, 28-622, TLR, Full Black, G2.0, Graphene + Silica, 100 TPI
SHIFTER	Sram Rival AXS E1
REAR DERAILLEUR	Sram Rival AXS E1, 12sp
FRONT DERAILLEUR	Sram Rival AXS E1
CRANKSET	Sram Rival E1, 48x35T Crank length: 165 mm (47-50 cm); 170 mm (53-55 cm); 172.5 mm (57-59 cm)
BOTTOM BRACKET	Sram Press fit Road 86.5x41
CHAIN	Sram Rival E1
CASSETTE / FREEWHEEL	Sram Rival XG 1250 D1, 10-36, 10-11-12-13-15-17-19-21-24-28-32-36T
BRAKE LEVER	Included in the shifter
BRAKE	Sram Rival E1, Hydraulic disc brake
FRONT DISK ROTOR	Sram Centerline, Center Lock, 160 mm
REAR DISK ROTOR	Sram Centerline, Center Lock, 160 mm

OLTRE COMP | 105 DI2 12SP | YTB26



The image shown is indicative only. Components and graphic detail may differ from actual model. Bianchi reserves the right to amend specifications and/or prices.

COLOR	ZN - Metallic Celeste/Black - full glossy ZP - Velvet Navy/Off White- full matt
FRAME	Oltre Comp, carbon, disc brakes, electronic and mechanical shifting compatible, internal cable routing 1.5-1.5 headset, BB-PressFit 86,5x41, flat mount brakes, thru axle 12x142mm sizes 47-50-53-55-57-59cm
SEATPOST CLAMP	included in the frame
HEADSET	Fsa TH-073E ACB 1.5 51.8x40x8
FORK	Full Carbon aero, disc brakes, integrated head 1,5, thru axle 12x100mm, compatible with 700x30 tire
SHIFTER	Shimano 105 Di2 hydraulic disc brake for road, ST-R7170, BR-R7170, for 160mm rotor
REAR DERAILLEUR	Shimano, 105 Di2 RD-R7150, 12-speed
FRONT DERAILLEUR	Shimano 105 Di2, FD-R7150 12-speed
CRANKSET	Shimano 105 12sp, FC-R7100, Ultegra hollowtech 2, for rear 12- speed, 50x34T, Crank Length: 170mm-47/53cm, 172.5mm-55/59cm
BOTTOM BRACKET	Shimano, SM-BB72-41B, press fit for road, bearing, inner cover
CHAIN	Shimano, 105 12sp, CN-M7100
CASSETTE / FREEWHEEL	Shimano, 105 12sp, CS-R7100, 11-12-13-14-15-17-19-21-24-27-30-34T
BRAKE	Shimano BR-R8170 Hydraulic disc brake, included in the shifter

BRAKE LEVER	included
DISC ROTOR	Shimano RT70 rotor for disc brake center lock, 160mm front and rear
RIM/WHEELSET	Velomann Plutonium , 50mm profile, 700x21c, 24h, HG body
TIRE	Vittoria Rubino V 28-622 TLR full black G2.0, graphene + silica, 100TPI,
STEM	Velomann Aero stem, material alloy, Oversize, 1.1/8, size: 90mm-47/50cm, 100mm-53cm, 110mm-55/57cm, 120mm-59cm
HANDLEBAR	Velomann Aero Compact handlebar, alloy diam. 31,8mm, reach 74mm, drop 116mm, for fully internal cable routing Size: 400mm-47~53cm, 420mm-55~59cm
GRIP / TAPE	Bianchi Arrow premium tape, 2.5mm thickness, black
SEATPOST	Oltre Full Carbon Aero special dimension seatpost, 20mm offset, length: 280mm-47cm, 300mm50/55cm, 350mm-57/59cm
SADDLE	Velomann Mitora139, open flow, AISI rails 7x7mm, carbon-reinforced nylon, Wide: 139mm, Lenght: 250mm

OLTRE RACE

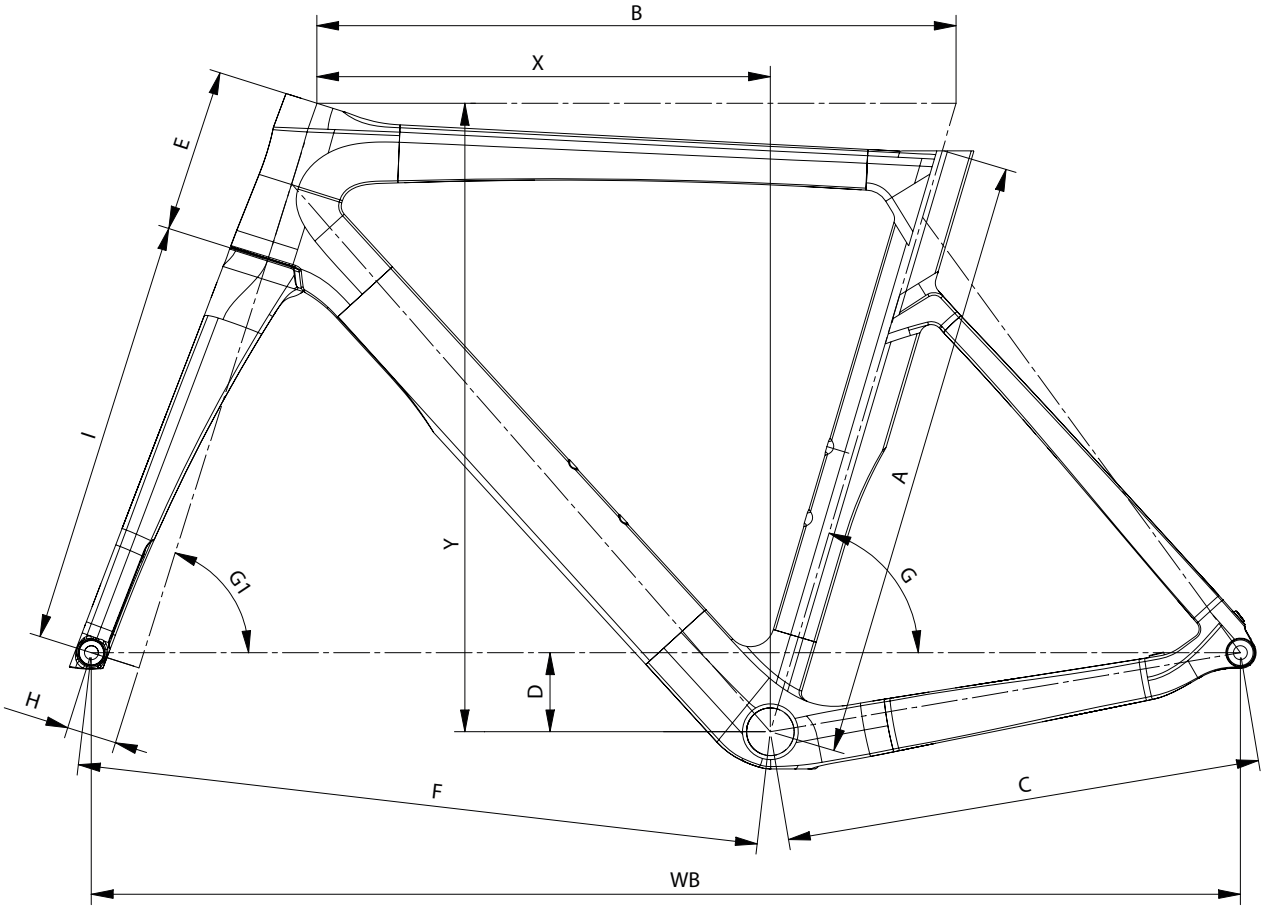

Oltre Race													
SIZE	A	B	C	D	E	F	G	G1	H	I	X	Y	WB
440	420	505	410	58	95	575	75°	70.5°	43	368	376	481	977
470	440	515	410	58	105	581	74.5°	70.5°	43	368	379	490	982
500	470	525	410	58	110	582	74.5°	71.5°	43	368	387	499	983
530	500	535	410	68	125	583	74°	72°	43	368	385	525	984
550	520	550	410	68	140	588	73.5°	72.5°	43	368	390	541	988
570	540	560	410	68	155	593	73.5°	73°	43	368	395	557	994
590	560	575	412	68	175	603	73°	73°	43	368	397	576	1006
610	580	585	414	68	195	607	72.5°	73°	43	368	398	595	1012

OLTRE RACE | 105 DI2 12SP | YTB37



The image shown is indicative only. Components and graphic detail may differ from actual model. Bianchi reserves the right to amend specifications and/or prices.

COLOR	ZK- CK16/Metallic Celeste- full glossy ZL - Grey/Black- full matt
FRAME	Oltre Race aero carbon, compatible with mechanical/electronic transmissions, compatible with internal cable routing, BB-PressFit 86,5x41, integrated seat clamp, disc brake flat mount, thru axle 12x142 sizes 44-47-50-53-55-57-59-61cm
SEATPOST CLAMP	included in the frame
HEADSET	ACROS & FSA, for internal cable routing
FORK	Full Carbon Aero Road, integrated head , disc brake flat mount, thru axle 12x100
SHIFTER	Shimano 105 Di2 hydraulic disc brake for road, ST-R7170, BR-R7170, for 160mm rotor
REAR DERAILLEUR	Shimano, RD-R7150, 105 Di2 12-speed
FRONT DERAILLEUR	Shimano 105 Di2 12sp, FD-R7150
CRANKSET	Shimano 105 12sp, FC-R7100, hollowtech 2, for rear 12- speed, 50x34T Crank Length: 165mm-44cm, 170mm-47/53cm, 172.5mm-55/59cm, 175-61cm
BOTTOM BRACKET	Token Ninja Lite BB4124PS, for 24mm spindle, threaded design
CHAIN	Shimano, 105 12sp, CN-M7100
CASSETTE / FREEWHEEL	Shimano, 105 12sp, CS-R7100, 11-12-13-14-15-17-19-21-24-27-30-34T

BRAKE	Shimano BR-R7170 Hydraulic disc brake, included in the shifter
BRAKE LEVER	included
DISC ROTOR	Shimano rotor for disc brake center lock, 160mm
RIM/WHEELSET	Velomann V30R, alloy, 23mm channel, 30mm profile. 2 to 1 spoke pattern, j-bend spokes, black, HG11 boby, weight : 1790g
TIRE	Vittoria Rubino V 28-622 TLR full black G2.0, graphene + silica, 100TPI,
STEM	Velomann, Alloy 6061, raise - 7° Ext: 80mm-44cm, 90mm-47/50cm, 100mm-53cm, 110mm-55/57cm, 120mm-59/61cm
HANDLEBAR	Velomann Aero Compact, alloy 6061 diam. 31,8mm, reach 74mm, drop 116mm Size: 400mm-47/53cm, 420mm-55/59cm, 440mm-61cm
GRIP / TAPE	Bianchi Hexagon tape, 2.5mm thickness, black
SEATPOST	Velomann Full Carbon Aeroshape, special Clamp type with alloy head adjustable and reversible +/- 35mm; lenght: 250mm-44, 300mm-47/50cm, 350mm-53/61cm
SADDLE	Velomann Mitora 139.1, open flow, steel rails 7x7mm, carbon-reinforced nylon, Wide: 139mm, Lenght: 250mm

OLTRE RACE | 105 12SP | YTB8D



The image shown is indicative only. Components and graphic detail may differ from actual model. Bianchi reserves the right to amend specifications and/or prices.

COLOR	ZK- CK16/Metallic Celeste- full glossy ZL - Grey/Black- full matt
FRAME	Olyre Race aero carbon, compatible with mechanical/electronic transmissions, compatible with internal cable routing, BB-PressFit 86,5x41, integrated seat clamp, disc brake flat mount, thru axle 12x142 sizes 44-47-50-53-55-57-59-61cm
SEATPOST CLAMP	included in the frame
HEADSET	ACROS & FSA, for internal cable routing
FORK	Full Carbon Aero Road, integrated head , disc brake flat mount, thru axle 12x100
SHIFTER	Shimano 105 hydraulic disc brake for road, ST-R7120, BR-R7170, for 160mm rotor
REAR DERAILLEUR	Shimano 105 12sp, RD-R7100
FRONT DERAILLEUR	Shimano 105 12sp, FD-R7100
CRANKSET	Shimano 105 hollowtech 2, 50x34T Crank Length: 165mm-44cm, 170mm-47/53cm, 172.5mm-55/59cm, 175-61cm
BOTTOM BRACKET	Token Ninja Lite BB4124PS, for 24mm spindle, threaded design
CHAIN	Shimano CN-M6100, 12sp
CASSETTE / FREEWHEEL	Shimano, 105 12sp, CS-R7100, 11-12-13-14-15-17-19-21-24-27-30-34T
BRAKE	Shimano Hydraulic disc brake, included in the shifter
BRAKE LEVER	included

DISC ROTOR	Shimano rotor for disc brake center lock, 160mm
RIM/WHEELSET	Velomann V30R, alloy, 23mm channel, 30mm profile. 2 to 1 spoke pattern, j-bend spokes, black, HG11 boby, weight : 1790g
TIRE	Vittoria Rubino V 28-622 TLR full black G2.0, graphene + silica, 100TPI,
STEM	Velomann, Alloy 6061, raise - 7° Ext: 80mm-44cm, 90mm-47/50cm, 100mm-53cm, 110mm-55/57cm, 120mm-59/61cm
HANDLEBAR	Velomann Aero Compact, alloy 6061 diam. 31,8mm, reach 74mm, drop 116mm Size: 400mm-47/53cm, 420mm-55/59cm, 440mm-61cm
GRIP / TAPE	Bianchi Hexagon tape, 2.5mm thickness, black
SEATPOST	Velomann Full Carbon Aeroshape, special Clamp type with alloy head adjustable and reversible +/- 35mm; lenght: 250mm-44, 300mm-47/50cm, 350mm-53/61cm
SADDLE	Velomann Mitora 139.1, open flow, steel rails 7x7mm, carbon-reinforced nylon, Wide: 139mm, Lenght: 250mm

ROAD RACING
ALL ROUNDER

SPECIALISSIMA RC

SPECIALISSIMA PRO

SPECIALISSIMA COMP

SPRINT

SPECIALISSIMA

RC



SPECIALISSIMA RC | SPECIALISSIMA PRO | SPECIALISSIMA COMP

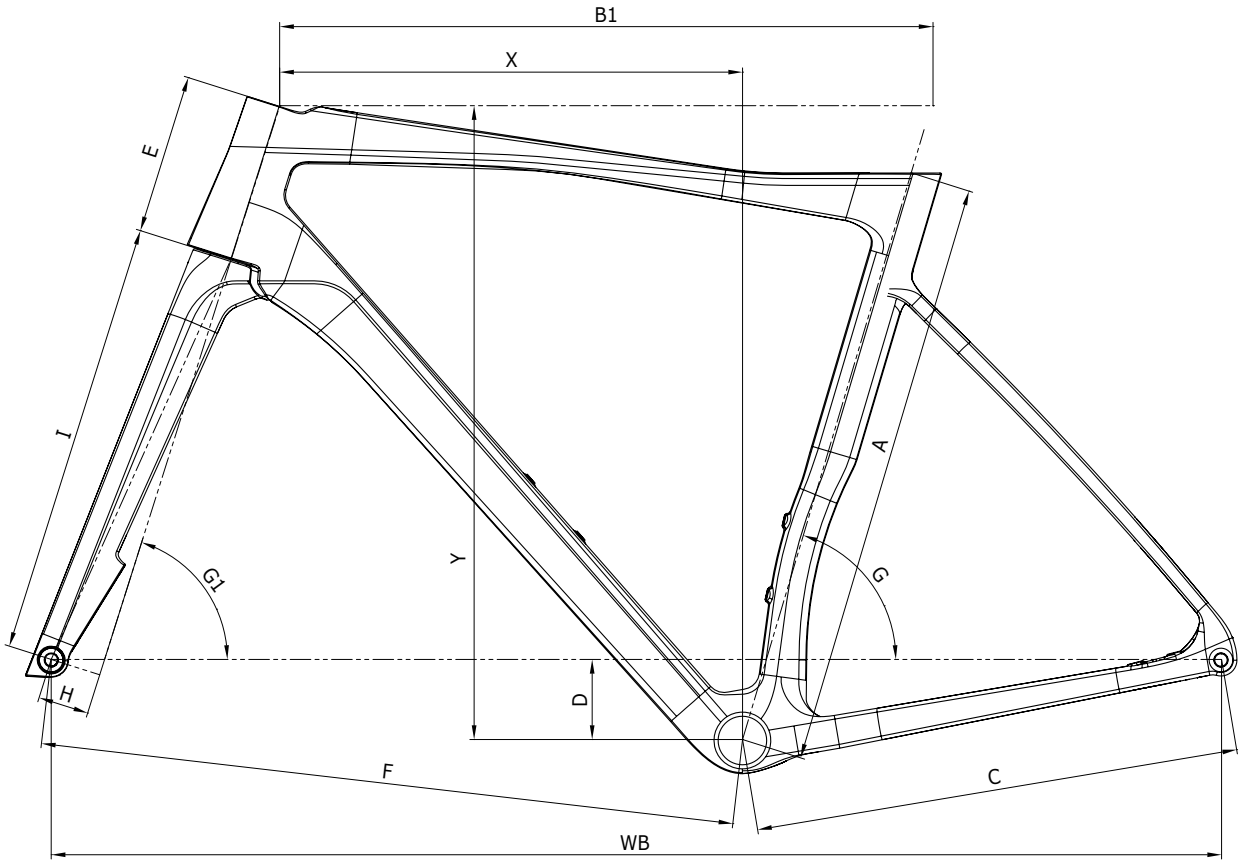

Specialissima RC / Specialissima PRO / Specialissima COMP													
SIZE	A	B1	C	D	E	F	G	G1	H	I	X	Y	WB
470	420	514	410	58	100	579	74.5°	70.5°	43	368	379	486	982
500	450	524	410	58	105	581	74.5°	71.5°	43	368	387	494	983
530	480	535	410	68	120	582	74°	72°	43	368	386	520	984
550	500	550	410	68	135	588	73.5°	72.5°	43	368	391	536	988
570	520	560	412	68	150	593	73.5°	73°	43	368	397	552	996
590	540	575	412	68	170	603	73°	73°	43	368	400	571	1005

SPECIALISSIMA TEAM REPLICA RC | DURA-ACE DI2 12SP | YUB04



The image shown is indicative only. Components and graphic detail may differ from actual model. Bianchi reserves the right to amend specifications and/or prices.

COLORS	MR - Carbon/Metallic Celeste - CK16 [Full Matt]
FRAME	Bianchi Specialissima RC carbon High Modulus, only electronic groupsets, fully internal cable routing, headset Acros ICR, direct mount brakes, BB-PressFit 86.5x41 sizes 47-50-53-55-57-59
SEATPOST CLAMP	Bianchi Custom
SEATPOST	Bianchi Specialissima, full carbon, aero shape, 20 mm offset length: 280 mm (47 cm); 300 mm (50-53 cm); 350 mm (55-59 cm)
HEADSET	Acros Acros IS52 Integrated Cable Routing
FORK	Bianchi Specialissima RC full Carbon High Modulus aero, integrated head, disc, 1.5 head, 12x100 mm thru axle
STEM	Bianchi Reparto Corse integrated handlebar, carbon, for Acros Integrated Cable Routing headset, drop 125 mm, reach 80 mm Size: 90/380 mm (47-50 cm) ; 100/400 mm (53 cm) ; 110/400 mm (55-57 cm); 120/420 mm (59 cm)
HANDLEBAR	Included in the stem
GRIP / TAPE	Bianchi Arrow premium tape, 2.5 mm thickness, Celeste
SADDLE	Selle Italia SLR Boost Pro Team, Carbon, Superflow, Length 248 mm, Width 130 mm

WHEELSET	Vision Metron45 SL, profile height 45 mm, 2 to 1 spoke pattern, Aero spokes, HG11 body, weight 1390 g
TIRE	Vittoria Corsa Pro 28-622, TLR, G2.0, 320 TPI, Para/Black
SHIFTER	Shimano Dura-Ace Di2, shifter lever ST-R9270
REAR DERAILLEUR	Shimano Dura-Ace Di2, RD-R9250, 12sp
FRONT DERAILLEUR	Shimano Dura-Ace Di2, FD-R9250
CRANKSET	FSA K-Force Team with PowerBox Powermeter, 52x36T Crank length: 165 mm (47-50 cm); 170 mm (53-55 cm); 172.5 mm (57-59 cm)
BOTTOM BRACKET	FSA BB386 EVO
CHAIN	Shimano Dura-Ace, CN-M9100
CASSETTE / FREEWHEEL	Shimano Dura-Ace, CS-R9200 11-30T, 11-12-13-14-15-16-17-19-21-24-27-30T
BRAKE LEVER	Included in the shifter
BRAKE	Shimano BR-R9270 Hydraulic disc brake
FRONT DISK ROTOR	Shimano RT-CL900 Center Lock with Ice Tech, 160 mm
REAR DISK ROTOR	Shimano RT-CL900 Center Lock with Ice Tech, 140 mm

NEW

SPECIALISSIMA RC PANTANI | SUPER RECORD WRL 13SP | YVBPN



The image shown is indicative only. Components and graphic detail may differ from actual model. Bianchi reserves the right to amend specifications and/or prices.

COLORS	DM - Pantani Edition
FRAME	Bianchi Specialissima RC carbon High Modulus, only electronic groupsets, fully internal cable routing, headset Acros ICR, direct mount brakes, BB-PressFit 86.5x41 sizes 47-50-53-55-57-59
SEATPOST CLAMP	Bianchi Custom
SEATPOST	Bianchi Specialissima, full carbon, aero shape, 20 mm offset length: 280 mm (47 cm); 300 mm (50-53 cm); 350 mm (55-59 cm)
HEADSET	Acros IS52 Integrated Cable Routing
FORK	Bianchi Specialissima RC full Carbon High Modulus aero, integrated head, disc, 1.5 head, 12x100 mm thru axle
STEM	Bianchi Reparto Corse integrated handlebar, carbon, for Acros Integrated Cable Routing headset, drop 125 mm, reach 80 mm Size: 90/380 mm (47-50 cm) ; 100/400 mm (53 cm) ; 110/400 mm (55-57 cm); 120/420 mm (59 cm)
HANDLEBAR	Included in the stem
GRIP / TAPE	Bianchi Arrow premium tape, 2.5 mm thickness, full black
SADDLE	Selle Italia Flite Boost Superflow Carbon

WHEELSET	Campagnolo Bora Ultra WTO, profile height 45 mm
TIRE	Vittoria Corsa Pro 28-622, TLR, G2.0, 320 TPI, Para/Black
SHIFTER	Campagnolo Super Record WRL
REAR DERAILLEUR	Campagnolo Super Record WRL 13sp
FRONT DERAILLEUR	Campagnolo Super Record WRL
CRANKSET	Campagnolo Super Record Carbon, 52x36T, Powermeter Crank length: 165 mm (47-50 cm); 170 mm (53-55 cm); 172.5 mm (57-59 cm)
BOTTOM BRACKET	Campagnolo Quick Tech, Press-Fit 86.5x41
CHAIN	Campagnolo Super Record
CASSETTE / FREEWHEEL	Campagnolo Super Record, 11-36T
BRAKE LEVER	Campagnolo Super Record, included in the shifter
BRAKE	Campagnolo Super Record, Hydraulic disc brake
FRONT DISK ROTOR	Campagnolo 03 AFS 160 mm
REAR DISK ROTOR	Campagnolo 03 AFS 160 mm

SPECIALISSIMA RC | RED E1 12SP | YUB40



The image shown is indicative only. Components and graphic detail may differ from actual model. Bianchi reserves the right to amend specifications and/or prices.

COLORS	B1 - Carbon UD/CK16 marble - CK16 [Full Glossy] MR - Carbon/Metallic Celeste - CK16 [Full Matt]
FRAME	Bianchi Specialissima RC carbon High Modulus, only electronic groupsets, fully internal cable routing, headset Acros ICR, direct mount brakes, BB-PressFit 86.5x41 sizes 47-50-53-55-57-59
SEATPOST CLAMP	Bianchi Custom
SEATPOST	Bianchi Specialissima, full carbon, aero shape, 20 mm offset length: 280 mm (47 cm); 300 mm (50-53 cm); 350 mm (55-59 cm)
HEADSET	Acros IS52 Integrated Cable Routing
FORK	Bianchi Specialissima RC full Carbon High Modulus aero, integrated head, disc, 1.5 head, 12x100 mm thru axle
STEM	Bianchi Reparto Corse integrated handlebar, carbon, for Acros Integrated Cable Routing headset, drop 125 mm, reach 80 mm Size: 90/380 mm (47-50 cm) ; 100/400 mm (53 cm) ; 110/400 mm (55-57 cm); 120/420 mm (59 cm)
HANDLEBAR	Included in the stem
GRIP / TAPE	Bianchi Arrow premium tape, 2.5 mm thickness, full black
SADDLE	Bianchi Reparto Corse RC139 Carbon, 139x250 mm, full carbon

WHEELSET	Bianchi Reparto Corse RC50R, Carbon rim, 50mm profile, 700x21c, 24h, XDR body
TIRE	Pirelli P Zero Race SL TLR, 28-622, 120 TPI
SHIFTER	Sram Red AXS E1
REAR DERAILLEUR	Sram Red AXS E1, 12sp
FRONT DERAILLEUR	Sram Red AXS E1
CRANKSET	Sram Red E1, Quarq Power Meter, 48x35T Crank length: 170 mm (47-53 cm); 172.5 mm (55-59 cm)
BOTTOM BRACKET	Sram Press fit Road 86.5x41
CHAIN	Sram Red E1
CASSETTE / FREEWHEEL	Sram Red XG 1290 E1, 10-33, 10-11-12-13-14-15-17-19-21-24-28-33T
BRAKE LEVER	Included in the shifter
BRAKE	Sram Red AXS E1, Hydraulic disc brake
FRONT DISK ROTOR	Sram Paceline X, Center Lock, 160 mm
REAR DISK ROTOR	Sram Paceline X, Center Lock, 140 mm

NEW

SPECIALISSIMA RC | DURA-ACE DI2 12SP | YUB42



The image shown is indicative only. Components and graphic detail may differ from actual model. Bianchi reserves the right to amend specifications and/or prices.

COLORS	B1 - Carbon UD/CK16 marble - CK16 [Full Glossy] MR - Carbon/Metallic Celeste - CK16 [Full Matt]
FRAME	Bianchi Specialissima RC carbon High Modulus, only electronic groupsets, fully internal cable routing, headset Acros ICR, direct mount brakes, BB-PressFit 86.5x41 sizes 47-50-53-55-57-59
SEATPOST CLAMP	Bianchi Custom
SEATPOST	Bianchi Specialissima, full carbon, aero shape, 20 mm offset length: 280 mm (47 cm); 300 mm (50-53 cm); 350 mm (55-59 cm)
HEADSET	Acros IS52 Integrated Cable Routing
FORK	Bianchi Specialissima RC full Carbon High Modulus aero, integrated head, disc, 1.5 head, 12x100 mm thru axle
STEM	Bianchi Reparto Corse integrated handlebar, carbon, for Acros Integrated Cable Routing headset, drop 125 mm, reach 80 mm Size: 90/380 mm (47-50 cm) ; 100/400 mm (53 cm) ; 110/400 mm (55-57 cm); 120/420 mm (59 cm)
HANDLEBAR	Included in the stem
GRIP / TAPE	Bianchi Arrow premium tape, 2.5 mm thickness, full black
SADDLE	Bianchi Reparto Corse RC139 Carbon, 139x250 mm, full carbon

WHEELSET	Bianchi Reparto Corse RC33R, Carbon rim, 50mm profile, 700x21c, 24h, HG11 body
TIRE	Pirelli P Zero Race SL TLR, 28-622, 120 TPI
SHIFTER	Shimano Dura-Ace Di2, shifter lever ST-R9270
REAR DERAILLEUR	Shimano Dura-Ace Di2, RD-R9250, 12sp
FRONT DERAILLEUR	Shimano Dura-Ace Di2, FD-R9250
CRANKSET	Shimano Dura-Ace, FC-R9200, 4iiii precision 3+ dual side power meter, 52x36T Crank length: 165 mm (47-50 cm); 170 mm (53-55 cm); 172.5 mm (57-59 cm)
BOTTOM BRACKET	Shimano SM-BB92-41B, press fit type for road
CHAIN	Shimano Dura-Ace, CN-M9100
CASSETTE / FREEWHEEL	Shimano Dura-Ace, CS-R9200 11-30T, 11-12-13-14-15-16-17-19-21-24-27-30T
BRAKE LEVER	Included in the shifter
BRAKE	Shimano BR-R9270 Hydraulic disc brake
FRONT DISK ROTOR	Shimano RT-CL900 Center Lock with Ice Tech, 160 mm
REAR DISK ROTOR	Shimano RT-CL900 Center Lock with Ice Tech, 140 mm

NEW

SPECIALISSIMA RC | SUPER RECORD WRL 13SP | YVB41



The image shown is indicative only. Components and graphic detail may differ from actual model. Bianchi reserves the right to amend specifications and/or prices.

COLORS	MR - Carbon/Metallic Celeste - CK16 [Full Matt] B1 - Carbon UD/CK16 marble - CK16 [Full Glossy]
FRAME	Bianchi Specialissima RC carbon High Modulus, only electronic groupsets, fully internal cable routing, headset Acros ICR, direct mount brakes, BB-PressFit 86.5x41 sizes 47-50-53-55-57-59
SEATPOST CLAMP	Bianchi Custom
SEATPOST	Bianchi Specialissima, full carbon, aero shape, 20 mm offset length: 280 mm (47 cm); 300 mm (50-53 cm); 350 mm (55-59 cm)
HEADSET	Acros Acros IS52 Integrated Cable Routing
FORK	Bianchi Specialissima RC full Carbon High Modulus aero, integrated head, disc, 1.5 head, 12x100 mm thru axle
STEM	Bianchi Reparto Corse integrated handlebar, carbon, for Acros Integrated Cable Routing headset, drop 125 mm, reach 80 mm Size: 90/380 mm (47-50 cm) ; 100/400 mm (53 cm) ; 110/400 mm (55-57 cm); 120/420 mm (59 cm)
HANDLEBAR	Included in the stem
GRIP / TAPE	Bianchi Arrow premium tape, 2.5 mm thickness, full black
SADDLE	Bianchi Reparto Corse RC139 Carbon, 139x250 mm, full carbon

WHEELSET	Bianchi Reparto Corse RC33R, Carbon rim, 33mm profile, 700x21c, 24h, Campagnolo body
TIRE	Pirelli P Zero Race SL TLR, 28-622, 120 TPI
SHIFTER	Campagnolo Super Record WRL
REAR DERAILLEUR	Campagnolo Super Record WRL 13sp
FRONT DERAILLEUR	Campagnolo Super Record WRL
CRANKSET	Campagnolo Super Record Carbon, 52x36T, Powermeter Crank length: 165 mm (47-50 cm); 170 mm (53-55 cm); 172.5 mm (57-59 cm)
BOTTOM BRACKET	Campagnolo Quick Tech, Press-Fit 86.5x41
CHAIN	Campagnolo Super Record
CASSETTE / FREEWHEEL	Campagnolo Super Record, 11-36T
BRAKE LEVER	Campagnolo Super Record, included in the shifter
BRAKE	Campagnolo Super Record, Hydraulic disc brake
FRONT DISK ROTOR	Campagnolo 03 AFS 160 mm
REAR DISK ROTOR	Campagnolo 03 AFS 160 mm

NEW

SPECIALISSIMA RC | FRAMEKIT | XTB07



The image shown is indicative only. Components and graphic detail may differ from actual model. Bianchi reserves the right to amend specifications and/or prices.

COLOR	MR - Carbon/CK16 Metallic/CK16 / B1 - Carbon UD/CK16 marble - CK16 [Full Glossy]
FRAME	Specialissima RC carbon HM, only electronic groupsets, fully internal cable routing, headset Acros ICR, direct mount brakes, BB-PressFit 86,5x41 sizes 47-50-53-55-57-59cm
HEADSET	Acros IS52 ICR SSbearings
FORK	Specialissima RC full Carbon HM aero, integrated head, disc, 1.5" head, 12x100mm thru axle
SEATPOST	Specialissima Full Carbon Aero special dimension seatpost, 20mm offset, length: 280mm-47cm, 300mm-50/53cm, 350mm-55/59cm

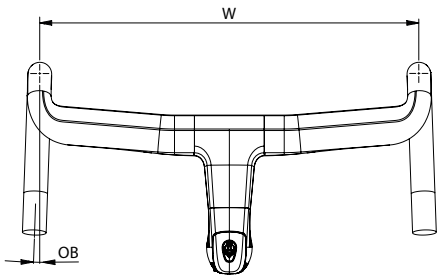

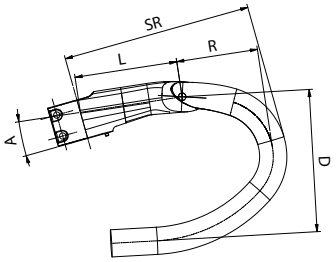

Specialissima RC/PRO Integrated Handlebar (C2306194)							
Size	Width (W)	Lenght (L)	Reach (R)	Drop (D)	Stem/HB reach (SR)	Outward bend (OB)	Angle (A)
90x380	380	90	72,6	124,8	167	2°	-7°
90x400	400	90	72,6	124,8	167	2°	-7°
90x420	420	90	72,6	124,8	167	2°	-7°
100x380	380	100	72,6	124,8	177	2°	-7°
100x400	400	100	72,6	124,8	177	2°	-7°
100x420	420	100	72,6	124,8	177	2°	-7°
110x380	380	110	72,6	124,8	187	2°	-7°
110x400	400	110	72,6	124,8	187	2°	-7°
110x420	420	110	72,6	124,8	187	2°	-7°
120x380	380	120	72,6	124,8	197	2°	-7°
120x400	400	120	72,6	124,8	197	2°	-7°
120x420	420	120	72,6	124,8	197	2°	-7°
120x440	440	120	72,6	124,8	197	2°	-7°
130x380	380	130	72,6	124,8	207	2°	-7°
130x400	400	130	72,6	124,8	207	2°	-7°
130x420	420	130	72,6	124,8	207	2°	-7°
130x440	440	130	72,6	124,8	207	2°	-7°

*Frame price does not include cockpit.

Crucial to its new and improved aero performance is the Specialissima's integrated handlebar. Available in five lengths and with a full carbon construction, it weighs just 330g for the 110mm x 380mm option. It's compatible with Acros internal cable routing and offers a 73mm reach with 125mm drop and a 2° flare.

To ensure that more riders can experience the epic performance of the Specialissima RC handlebar, our engineers have ensured it is fully cross-compatible with the Pro and Comp models, should owners wish to upgrade after purchase.

COCKPIT

COMPATIBLE WITH ACROS ICR internal cable routing

FROM 90 TO 130MM AND FROM 380 TO 440MM (C-C) IN WIDTH



FULL CARBON
330G OF WEIGHT
110x38

REACH 73MM DROP
125MM
2° FLARE ANGLE

2-BOLT COMPUTER MOUNT COMPATIBLE

NEW

SPECIALISSIMA PRO | ULTEGRA DI2 12SP | YUB45



The image shown is indicative only. Components and graphic detail may differ from actual model. Bianchi reserves the right to amend specifications and/or prices.

COLORS	MV - Carbon/Graphite iridescent - Black [Full Matt] B5 - Blue Tail/Metallic Celeste - CK16 [Full Matt] B3 - Blue Purple - Chrome [Full Glossy] MW - Carbon/Metallic Celeste - CK16 [Full Matt]
FRAME	Bianchi Specialissima PRO carbon HM with Bianchi CV System, only electronic groupsets, fully internal cable routing, headset Acros ICR, direct mount brakes, BB-PressFit 86.5x41 sizes 47-50-53-55-57-59
SEATPOST CLAMP	Bianchi Custom
SEATPOST	Bianchi Specialissima, full carbon, aero shape, 20 mm offset length: 280 mm (47 cm); 300 mm (50-53 cm); 350 mm (55-59 cm)
HEADSET	Acros IS52 Integrated Cable Routing
FORK	Bianchi Specialissima PRO full Carbon High Modulus aero with Bianchi CV System, integrated head, disc, 1.5 head, 12x100 mm thru axle
STEM	Bianchi Reparto Corse integrated handlebar, carbon, for Acros Integrated Cable Routing headset, drop 125 mm, reach 80 mm Size: 90/380 mm (47-50 cm) ; 100/400 mm (53 cm) ; 110/400 mm (55-57 cm); 120/420 mm (59 cm)
HANDLEBAR	Included in the stem
GRIP / TAPE	Bianchi Arrow premium tape, 2.5 mm thickness, full black
SADDLE	Velomann Mitora 139 Lite, open flow, Carbon rails 7x9.1 mm, Carbon-reinforced nylon shell, length 250 mm, width 139 mm

WHEELSET	Velomann Palladium, Carbon rim, 33 mm profile, 700x21c, 24h, HG11 body
TIRE	Pirelli P Zero Race SL TLR, 28-622, 120 TPI
SHIFTER	Shimano Ultegra Di2, shifter lever ST-R8170, caliper BR-R8170
REAR DERAILLEUR	Shimano Ultegra Di2, RD-R8150, 12sp
FRONT DERAILLEUR	Shimano Ultegra Di2, FD-R8150
CRANKSET	Shimano Ultegra, FC-R8100, 4iiii precision 3 single side power meter, 52x36T Crank length: 165 mm (47-50 cm); 170 mm (53-55 cm); 172.5 mm (57-59 cm)
BOTTOM BRACKET	Shimano SM-BB72-41B, press fit type for road
CHAIN	Shimano Ultegra, CN-M8100
CASSETTE / FREEWHEEL	Shimano Ultegra, CS-R8100 11-30T, 11-12-13-14-15-16-17-19-21-24-27-30T
BRAKE LEVER	Included in the shifter
BRAKE	Shimano BR-R8170 Hydraulic disc brake
FRONT DISK ROTOR	Shimano RT-CL800 Center Lock with Ice Tech, 160 mm
REAR DISK ROTOR	Shimano RT-CL800 Center Lock with Ice Tech, 160 mm

NEW

SPECIALISSIMA PRO | ULTEGRA DI2 12SP | YUB45



The image shown is indicative only. Components and graphic detail may differ from actual model. Bianchi reserves the right to amend specifications and/or prices.

COLORS	MV - Carbon/Graphite iridescent - Black [Full Matt] B5 - Blue Tail/Metallic Celeste - CK16 [Full Matt] B3 - Blue Purple - Chrome [Full Glossy] MW - Carbon/Metallic Celeste - CK16 [Full Matt]
FRAME	Bianchi Specialissima PRO carbon HM with Bianchi CV System, only electronic groupsets, fully internal cable routing, headset Acros ICR, direct mount brakes, BB-PressFit 86.5x41 sizes 47-50-53-55-57-59
SEATPOST CLAMP	Bianchi Custom
SEATPOST	Bianchi Specialissima, full carbon, aero shape, 20 mm offset length: 280 mm (47 cm); 300 mm (50-53 cm); 350 mm (55-59 cm)
HEADSET	Acros IS52 Integrated Cable Routing
FORK	Bianchi Specialissima PRO full Carbon High Modulus aero with Bianchi CV System, integrated head, disc, 1.5 head, 12x100 mm thru axle
STEM	Bianchi Reparto Corse integrated handlebar, carbon, for Acros Integrated Cable Routing headset, drop 125 mm, reach 80 mm Size: 90/380 mm (47-50 cm) ; 100/400 mm (53 cm) ; 110/400 mm (55-57 cm); 120/420 mm (59 cm)
HANDLEBAR	Included in the stem
GRIP / TAPE	Bianchi Arrow premium tape, 2.5 mm thickness, full black
SADDLE	Velomann Mitora 139 Lite, open flow, Carbon rails 7x9.1 mm, Carbon-reinforced nylon shell, length 250 mm, width 139 mm

WHEELSET	Velomann Palladium, Carbon rim, 33 mm profile, 700x21c, 24h, HG11 body
TIRE	Pirelli P Zero Race SL TLR, 28-622, 120 TPI
SHIFTER	Shimano Ultegra Di2, shifter lever ST-R8170, caliper BR-R8170
REAR DERAILLEUR	Shimano Ultegra Di2, RD-R8150, 12sp
FRONT DERAILLEUR	Shimano Ultegra Di2, FD-R8150
CRANKSET	Shimano Ultegra, FC-R8100, 4iiii precision 3 single side power meter, 52x36T Crank length: 165 mm (47-50 cm); 170 mm (53-55 cm); 172.5 mm (57-59 cm)
BOTTOM BRACKET	Shimano SM-BB72-41B, press fit type for road
CHAIN	Shimano Ultegra, CN-M8100
CASSETTE / FREEWHEEL	Shimano Ultegra, CS-R8100 11-30T, 11-12-13-14-15-16-17-19-21-24-27-30T
BRAKE LEVER	Included in the shifter
BRAKE	Shimano BR-R8170 Hydraulic disc brake
FRONT DISK ROTOR	Shimano RT-CL800 Center Lock with Ice Tech, 160 mm
REAR DISK ROTOR	Shimano RT-CL800 Center Lock with Ice Tech, 160 mm

NEW

SPECIALISSIMA PRO | FORCE AXS E1 12SP | YVB43



The image shown is indicative only. Components and graphic detail may differ from actual model. Bianchi reserves the right to amend specifications and/or prices.

COLORS	MW - Carbon/Metallic Celeste - CK16 [Full Matt] MV - Carbon/Graphite iridescent - Black [Full Matt] B5 - Blue Tail/Metallic Celeste - CK16 [Full Matt] B3 - Blue Purple - Chrome [Full Glossy]
FRAME	Bianchi Specialissima PRO carbon HM with Bianchi CV System, only electronic groupsets, fully internal cable routing, headset Acros ICR, direct mount brakes, BB-PressFit 86.5x41 sizes 47-50-53-55-57-59
SEATPOST CLAMP	Bianchi Custom
SEATPOST	Bianchi Specialissima, full carbon, aero shape, 20 mm offset length: 280 mm (47 cm); 300 mm (50-53 cm); 350 mm (55-59 cm)
HEADSET	Acros Acros IS52 Integrated Cable Routing
FORK	Bianchi Specialissima PRO full Carbon High Modulus aero with Bianchi CV System, integrated head, disc, 1.5 head, 12x100 mm thru axle
STEM	Bianchi Reparto Corse integrated handlebar, carbon, for Acros Integrated Cable Routing headset, drop 125 mm, reach 80 mm Size: 90/380 mm (47-50 cm) ; 100/400 mm (53 cm) ; 110/400 mm (55-57 cm); 120/420 mm (59 cm)
HANDLEBAR	Included in the stem
GRIP / TAPE	Bianchi Arrow premium tape, 2.5 mm thickness, full black
SADDLE	Velomann Mitora 139 Lite, open flow, Carbon rails 7x9.1 mm, Carbon-reinforced nylon shell, length 250 mm, width 139 mm

WHEELSET	Velomann Palladium, Carbon rim, 33 mm profile, 700x21c, 24h, XDR body
TIRE	Pirelli P ZERO Race TLR, 28-622, 127 TPI, SPEEDCore
SHIFTER	Sram Force AXS E1
REAR DERAILLEUR	Sram Force AXS E1, 12sp
FRONT DERAILLEUR	Sram Force AXS E1
CRANKSET	Sram Force E1, Quarq Power Meter, 48x35T Crank length: 165 mm (47-50 cm); 170 mm (53-55 cm); 172.5 mm (57-59 cm)
BOTTOM BRACKET	Sram Press fit Road 86.5x41
CHAIN	Sram Force E1
CASSETTE / FREEWHEEL	Sram Force XG 1270 E1, 10-33, 10-11-12-13-14-15-17-19-21-24-28-33T
BRAKE LEVER	Included in the shifter
BRAKE	Sram Force E1, Hydraulic disc brake
FRONT DISK ROTOR	Sram Paceline, Center Lock, 160 mm
REAR DISK ROTOR	Sram Paceline, Center Lock, 160 mm

NEW

SPECIALISSIMA PRO | FRAMEKIT | XTB08



The image shown is indicative only. Components and graphic detail may differ from actual model. Bianchi reserves the right to amend specifications and/or prices.

COLOR	MW - Carbon/CK16 Metallic/CK16 MV - Carbon/Graphite Irid./Black	B5 - Blue Tail/Metallic Celeste - CK16 [Full Matt] B3 - Blue Purple - Chrome [Full Glossy]
FRAME	Specialissima PRO carbon HM with Bianchi CV, only electronic groupsets, fully internal cable routing, headset Acros ICR, direct mount brakes, BB-PressFit 86,5x41 sizes 47-50-53-55-57-59cm	
HEADSET	Acros IS52 ICR	
FORK	Specialissima PRO full Carbon HM with CV, aero, integrated head, disc, 1.5" head, 12x100mm thru axle	
SEATPOST	Specialissima Full Carbon Aero special dimension seatpost, 20mm offset, length: 280mm-47cm, 300mm-50~53cm, 350mm-55~59cm	

*Frame price does not include cockpit.

NEW

SPECIALISSIMA COMP | ULTEGRA DI2 12SP | YTB46



The image shown is indicative only. Components and graphic detail may differ from actual model. Bianchi reserves the right to amend specifications and/or prices.

COLORS	B9 - Graphite/Metallic Celeste - CK16 [Full Glossy] BE - Black/Deep Blue - Grey [Full Matt]"
FRAME	Bianchi Specialissima COMP full carbon, only electronic groupsets, fully internal cable routing, headset Acros ICR, direct mount brakes, BB-PressFit 86.5x41 sizes 47-50-53-55-57-59
SEATPOST CLAMP	Bianchi Custom
SEATPOST	Bianchi Specialissima, full carbon, aero shape, 20 mm offset length: 280 mm (47 cm); 300 mm (50-53 cm); 350 mm (55-59 cm)
HEADSET	Acros IS52 Integrated Cable Routing
FORK	Bianchi Specialissima COMP full Carbon aero, integrated head, disc, 1.5 head, 12x100 mm thru axle
STEM	Bianchi Reparto Corse integrated handlebar, carbon, for Acros Integrated Cable Routing headset, drop 125 mm, reach 80 mm Size: 90/380 mm (47-50 cm) ; 100/400 mm (53 cm) ; 110/400 mm (55-57 cm); 120/420 mm (59 cm)
HANDLEBAR	Included in the stem
GRIP / TAPE	Bianchi Arrow premium tape, 2.5 mm thickness, full black
SADDLE	Velomann Mitora 139, AISI rail, width 139 mm, length 250 mm

WHEELSET	Velomann Palladium, Carbon rim, 33 mm profile, 700x21c, 24h, HG11 body
TIRE	Vittoria Rubino V, 28-622, TLR, Full Black, G2.0, Graphene + Silica, 100 TPI
SHIFTER	Shimano Ultegra Di2, shifter lever ST-R8170, caliper BR-R8170
REAR DERAILLEUR	Shimano Ultegra Di2, RD-R8150, 12sp
FRONT DERAILLEUR	Shimano Ultegra Di2, FD-R8150
CRANKSET	Shimano Ultegra, FC-R8100, 52x36T Crank length: 165 mm (47-50 cm); 170 mm (53-55 cm); 172.5 mm (57-59 cm)
BOTTOM BRACKET	Shimano SM-BB72-41B, press fit type for road
CHAIN	Shimano Ultegra, CN-M8100
CASSETTE / FREEWHEEL	Shimano Ultegra, CS-R8100 11-30T, 11-12-13-14-15-16-17-19-21-24-27-30T
BRAKE LEVER	Included in the shifter
BRAKE	Shimano BR-R8170 Hydraulic disc brake
FRONT DISK ROTOR	Shimano RT-CL800 Center Lock with Ice Tech, 160 mm
REAR DISK ROTOR	Shimano RT-CL800 Center Lock with Ice Tech, 160 mm

NEW

SPECIALISSIMA COMP | RIVAL AXS E1 12SP | YVB48



The image shown is indicative only. Components and graphic detail may differ from actual model. Bianchi reserves the right to amend specifications and/or prices.

COLORS	MQ - CK16 - Graphite [Full Glossy] MF - Graphite - Black [Full Glossy] BE - Black/Deep Blue - Grey [Full Matt] B9 - Graphite/Metallic Celeste - CK16 [Full Glossy]
FRAME	Bianchi Specialissima COMP full carbon, only electronic groupsets, fully internal cable routing, headset Acros ICR, direct mount brakes, BB-PressFit 86.5x41 sizes 47-50-53-55-57-59
SEATPOST CLAMP	Bianchi Custom
SEATPOST	Bianchi Specialissima, full carbon, aero shape, 20 mm offset length: 280 mm (47 cm); 300 mm (50-53 cm); 350 mm (55-59 cm)
HEADSET	Acros Acros IS52 Integrated Cable Routing
FORK	Bianchi Specialissima COMP full Carbon aero, integrated head, disc, 1.5 head, 12x100 mm thru axle
STEM	Velomann AL6061, fully internal cable routing stem, compatible with Acros ICR system Size: 90 mm (47 cm); 100 mm (50-53 cm); 110 mm (55-57 cm); 120 mm (59 cm)
HANDLEBAR	Velomann Aero Compact handlebar, alloy, diameter 31.8 mm, reach 74 mm, drop 116 mm Size: 400 mm (47-53 cm); 420 mm (55-59 cm)
GRIP / TAPE	Bianchi Arrow premium tape, 2.5 mm thickness, full black
SADDLE	Velomann Mitora 139, AISI rail, width 139 mm, length 250 mm

WHEELSET	Velomann Palladium, Carbon rim, 33 mm profile, 700x21c, 24h, XDR body
TIRE	Vittoria Rubino V, 28-622, TLR, Full Black, G2.0, Graphene + Silica, 100 TPI
SHIFTER	Sram Rival AXS E1
REAR DERAILLEUR	Sram Rival AXS E1, 12sp
FRONT DERAILLEUR	Sram Rival AXS E1
CRANKSET	Sram Rival E1, 48x35T Crank length: 165 mm (47-50 cm); 170 mm (53-55 cm); 172.5 mm (57-59 cm)
BOTTOM BRACKET	Sram Press fit Road 86.5x41
CHAIN	Sram Rival E1
CASSETTE / FREEWHEEL	Sram Rival XG 1250 D1, 10-36, 10-11-12-13-15-17-19-21-24-28-32-36T
BRAKE LEVER	Included in the shifter
BRAKE	Sram Rival E1, Hydraulic disc brake
FRONT DISK ROTOR	Sram Centerline, Center Lock, 160 mm
REAR DISK ROTOR	Sram Centerline, Center Lock, 160 mm

NEW

SPECIALISSIMA COMP | 105 DI2 12SP | YTB47



The image shown is indicative only. Components and graphic detail may differ from actual model. Bianchi reserves the right to amend specifications and/or prices.

COLORS	BE - Black/Deep Blue - Grey [Full Matt] B9 - Graphite/Metallic Celeste - CK16 [Full Glossy]"
FRAME	Bianchi Specialissima COMP full carbon, only electronic groupsets, fully internal cable routing, headset Acros ICR, direct mount brakes, BB-PressFit 86.5x41 sizes 47-50-53-55-57-59
SEATPOST CLAMP	Bianchi Custom
SEATPOST	Bianchi Specialissima, full carbon, aero shape, 20 mm offset length: 280 mm (47 cm); 300 mm (50-53 cm); 350 mm (55-59 cm)
HEADSET	Acros IS52 Integrated Cable Routing
FORK	Bianchi Specialissima COMP full Carbon aero, integrated head, disc, 1.5 head, 12x100 mm thru axle
STEM	Bianchi Reparto Corse integrated handlebar, carbon, for Acros Integrated Cable Routing headset, drop 125 mm, reach 80 mm Size: 90/380 mm (47-50 cm) ; 100/400 mm (53 cm) ; 110/400 mm (55-57 cm); 120/420 mm (59 cm)
HANDLEBAR	Included in the stem
GRIP / TAPE	Bianchi Arrow premium tape, 2.5 mm thickness, full black
SADDLE	Velomann Mitora 139, AISI rail, width 139 mm, length 250 mm

WHEELSET	Velomann Palladium, Carbon rim, 33 mm profile, 700x21c, 24h, HG11 body
TIRE	Vittoria Rubino V, 28-622, TLR, Full Black, G2.0, Graphene + Silica, 100 TPI
SHIFTER	Shimano 105 Di2, shifter lever ST-R7170, caliper BR-R7170
REAR DERAILLEUR	Shimano 105 Di2, RD-R7150, 12sp
FRONT DERAILLEUR	Shimano 105 Di2, FD-R7150
CRANKSET	Shimano 105, FC-R7100, Hollowtech 2, 50x34T Crank length: 165 mm (47-50 cm); 170 mm (53-55 cm); 172.5 mm (57-59 cm)
BOTTOM BRACKET	Shimano SM-BB72-41B, press fit type for road
CHAIN	Shimano 105, CN-M7100
CASSETTE / FREEWHEEL	Shimano 105, CS-R7100 11-34T, 11-12-13-14-15-17-19-21-24-27-30-34T
BRAKE LEVER	Included in the shifter
BRAKE	Shimano BR-R7170 Hydraulic disc brake
FRONT DISK ROTOR	Shimano SM-RT70 Center Lock with Ice Tech, 160 mm
REAR DISK ROTOR	Shimano SM-RT70 Center Lock with Ice Tech, 160 mm

SPRINT

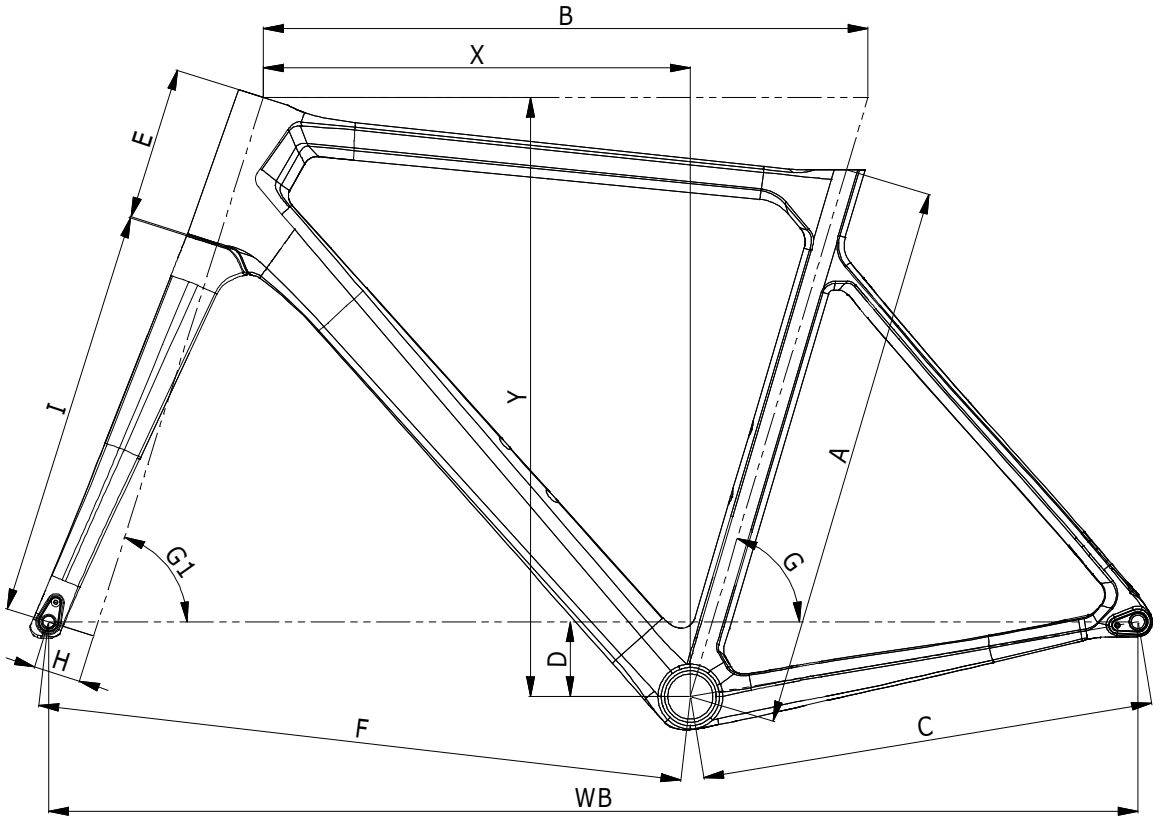

Sprint ICR													
SIZE	A	B	C	D	E	F	G	G1	H	I	X	Y	WB
470	420	515	410	60	105	580	74.5°	70.5°	43	373	377	497	982
500	450	525	410	60	110	582	74.5°	71.5°	43	373	383	505	983
530	480	535	410	68	125	583	74°	72°	43	373	384	529	984
550	500	550	413	68	140	588	73.5°	73°	43	373	388	545	991
570	520	560	413	68	155	593	73.5°	73°	43	373	393	561	996
590	540	575	413	68	175	603	73°	73°	43	373	396	580	1006
610	560	585	415	68	195	607	72.5°	73°	43	373	397	599	1012

SPRINT | 105 DI2 12V | YTBR6



Immagine a scopo indicativo. Componenti e dettagli grafici potrebbero non corrispondere al modello reale. Bianchi si riserva il diritto di modificare le specifiche.

COLORI	SX - CK16 - Nero [Lucido] SZ - Grigio chiaro - Iridescente [Lucido] SI - Celeste Metallico - CK16 [Lucido] SK - Bianco - Blu Viola [Lucido]
TELAIO	Bianchi Sprint, Carbonio monoscocca, compatibile con gruppi meccanici ed elettronici, BB-PressFit 86,5x41, tubo sterzo 1,5"/1,5", bloccaggio reggisella integrato, freno a disco flat mount, perno passante 12x142 mm taglie 47-50-53-55-57-59-61
MORSETTO REGGISELLA	Bianchi Personalizzato
REGGISELLA	Velomann Carbonio, offset 15 mm, diametro 27,2 mm lunghezza: 350 mm
SERIE STERZO	Acros & FSA per cavi integrati
FORCELLA	Bianchi Sprint, carbonio, aero, testa integrata 1,5", freno a disco flat mount, perno passante 12x100 mm
ATTACCO MANUBRIO	Velomann AL6061, rise -7° Taglie: 90 mm (47-50 cm); 100 mm (53 cm); 110 mm (55-57 cm); 120 mm (59-61 cm)
MANUBRIO	Velomann Compact, alluminio, diametro 31.8 mm, reach 80 mm, drop 130 mm Taglie: 400 mm (47-53 cm); 420 mm (55-59 cm); 440 mm (61 cm)
MANOPOLE / NASTRO	Bianchi nastro Hexagon, spessore 2,5 mm, nero
SELLA	Velomann Mitora 139.1, steel rails, length 250 mm, width 139 mm

RUOTE	Velomann V30R, alluminio, larghezza canale interno 23 mm, altezza profilo 30 mm, raggiatura 2 a 1, raggi a testa curva, nero, corpetto HG11, peso: 1790 g
COPERTURE	Vittoria Rubino V, 28-622, Full Black, G2.0, Graphene + Silica, 100 TPI
COMANDI	Shimano 105 Di2, comando-leva ST-R7170, pinza BR-R7170
DERAGLIATORE POSTERIORE	Shimano 105 Di2, RD-R7150, 12v
DERAGLIATORE ANTERIORE	Shimano 105 Di2, FD-R7150
GUARNITURA	Shimano 105, FC-R7100, Hollowtech 2, 50x34T Lunghezza pedivella: 170 mm (47-53 cm); 172.5 mm (55-59 cm); 175 mm (61 cm)
MOVIMENTO CENTRALE	Shimano SM-BB72-41B, press fit per road
CATENA	Shimano 105, CN-M7100
CASSETTA / RUOTA LIBERA	Shimano 105, CS-R7100 11-34T, 11-12-13-14-15-17-19-21-24-27-30-34T
LEVE FRENO	Inclusa nel comando
PINZE FRENO	Shimano BR-R7170 Freno a disco idraulico
ROTORE ANTERIORE	Shimano SM-RT70 Center Lock con Ice Tech, 160 mm
ROTORE POSTERIORE	Shimano SM-RT70 Center Lock con Ice Tech, 160 mm

SPRINT | 105 12SP | YTBR5



The image shown is indicative only. Components and graphic detail may differ from actual model. Bianchi reserves the right to amend specifications and/or prices.

COLORS	SX - CK16 - Black [Full Glossy] SZ - Light grey - Iridescent [Full Glossy] SI - Metallic Celeste - CK16 [Full Glossy] SK - White - Blue Violet [Full Glossy]
FRAME	no_code sizes 47-50-53-55-57-59-61
SEATPOST CLAMP	Bianchi Custom
SEATPOST	Velomann Carbon, offset 15 mm, diameter 27.2 mm length: 350 mm
HEADSET	Acros & FSA for internal cable routing
FORK	Bianchi Sprint, Carbon, Aero, integrated head 1,5", disc brake flat mount, thru axle 12x100 mm
STEM	Velomann AL6061, rise -7° Size: 90 mm (47-50 cm); 100 mm (53 cm); 110 mm (55-57 cm); 120 mm (59-61 cm)
HANDLEBAR	Velomann Compact, AL6061, diameter 31.8 mm, reach 80 mm, drop 130 mm Size: 400 mm (47-53 cm); 420 mm (55-59 cm); 440 mm (61 cm)
GRIP / TAPE	Bianchi Hexagon tape, 2.5 mm thickness, black
SADDLE	Velomann Mitora 139.1, steel rails, length 250 mm, width 139 mm

WHEELSET	Velomann V30R, alloy, internal channel width 23 mm, profile height 30 mm, 2 to 1 spoke pattern, j-bend spokes, black, HG11 body, weight: 1790 g
TIRE	Vittoria Rubino V, 28-622, Full Black, G2.0, Graphene + Silica, 100 TPI
SHIFTER	Shimano 105, shifter lever ST-R7120, caliper BR-R7170
REAR DERAILLEUR	Shimano 105, RD-R7100, 12sp
FRONT DERAILLEUR	Shimano 105, FD-R7100
CRANKSET	Shimano 105, FC-R7100, Hollowtech 2, 50x34T Crank length: 170 mm (47-53 cm); 172.5 mm (55-59 cm); 175 mm (61 cm)
BOTTOM BRACKET	Shimano SM-BB72-41B, press fit type for road
CHAIN	Shimano CN-M6100
CASSETTE / FREEWHEEL	Shimano 105, CS-R7100 11-34T, 11-12-13-14-15-17-19-21-24-27-30-34T
BRAKE LEVER	Included in the shifter
BRAKE	Shimano BR-R7170 Hydraulic disc brake
FRONT DISK ROTOR	Shimano SM-RT70 Center Lock with Ice Tech, 160 mm
REAR DISK ROTOR	Shimano SM-RT70 Center Lock with Ice Tech, 160 mm

ENDURANCE

INFINITO

INFINITO | ULTEGRA DI2 4IIII PWM | YUB4D



The image shown is indicative only. Components and graphic detail may differ from actual model. Bianchi reserves the right to amend specifications and/or prices.

COLORS	2K - CK16 - Black [Full Glossy] 2M - Purple Black - Black [Full Glossy]
FRAME	Bianchi Infinito, carbon, head tube 1.5"- 1.5", Internal cable routing, Mechanical/Electronic, tire clearance: 32 mm, Pressfit 86,5x41, Thru axle 12 x 142 mm sizes 44-47-50-53-55-57-59-61
SEATPOST CLAMP	Bianchi Custom
SEATPOST	Velomann SP155T.2, Shaft AL2014, Head AL6061, Seatback 25 mm length: 350 mm (47-57 cm); 380 mm (59-61 cm)
HEADSET	Acros & FSA for internal cable routing
FORK	Bianchi Infinito, carbon, 1.5" head, thru axle 12 x 100 mm
STEM	Velomann AL6061, fully internal cable routing stem, compatible with Acros ICR system Size: 90 mm (47 cm); 100 mm (50-53 cm); 110 mm (55-57 cm); 120 mm (59-61 cm)
HANDLEBAR	Velomann Aero Compact handlebar, alloy, diameter 31.8 mm, reach 74 mm, drop 116 mm Size: 400 mm (47-53 cm); 420 mm (55-57 cm); 440 mm (59-61 cm)
GRIP / TAPE	Bianchi Arrow premium tape, 2.5 mm thickness, full black
SADDLE	Velomann Mitora 139 Lite, open flow, Carbon rails 7x9.1 mm, Carbon-reinforced nylon shell, length 250 mm, width 139 mm

WHEELSET	Velomann Palladium, Carbon rim, 33 mm profile, 700x21c, 24h, HG11 body
TIRE	Pirelli Cinturato Velo TLR, 700x32, ArmourTech, 60 TPI
SHIFTER	Shimano Ultegra Di2, shifter lever ST-R8170, caliper BR-R8170
REAR DERAILLEUR	Shimano Ultegra Di2, RD-R8150, 12sp
FRONT DERAILLEUR	Shimano Ultegra Di2, FD-R8150
CRANKSET	Shimano Ultegra, FC-R8100, 4iiii precision 3 single side power meter, 52x36T Crank length: 170 mm (47-53 cm); 172.5 mm (55-59 cm); 175 mm (61 cm)
BOTTOM BRACKET	Shimano SM-BB72-41B, press fit type for road
CHAIN	Shimano Ultegra, CN-M8100
CASSETTE / FREEWHEEL	Shimano Ultegra, CS-R8101 11-34T, 11-12-13-14-15-17-19-21-24-27-30-34T
BRAKE LEVER	Included in the shifter
BRAKE	Shimano BR-R8170 Hydraulic disc brake
FRONT DISK ROTOR	Shimano RT-CL800 Center Lock with Ice Tech, 160 mm
REAR DISK ROTOR	Shimano RT-CL800 Center Lock with Ice Tech, 160 mm

INFINITO | 105 DI2 | YVBR8



The image shown is indicative only. Components and graphic detail may differ from actual model. Bianchi reserves the right to amend specifications and/or prices.

COLORS	2K - CK16 - Black [Full Glossy] 2M - Purple Black - Black [Full Glossy]
FRAME	Bianchi Infinito, carbon, head tube 1.5"- 1.5", Internal cable routing, Mechanical/Electronic, tire clearance: 32 mm, Pressfit 86,5x41, Thru axle 12 x 142 mm sizes 44-47-50-53-55-57-59-61
SEATPOST CLAMP	Bianchi Custom
SEATPOST	Velomann SP155T.2, Shaft AL2014, Head AL6061, Seatback 25 mm length: 350 mm (47-57 cm); 380 mm (59-61 cm)
HEADSET	Acros & FSA for internal cable routing
FORK	Bianchi Infinito, carbon, 1.5" head, thru axle 12 x 100 mm
STEM	Velomann AL6061, rise -7° Size: 90 mm (47 cm); 100 mm (50-53 cm); 110 mm (55-57 cm); 120 mm (59-61 cm)
HANDLEBAR	Velomann Compact, AL6061, diameter 31.8 mm, reach 80 mm, drop 130 mm Size: 400 mm (47-53 cm); 420 mm (55-57 cm); 440 mm (59-61 cm)
GRIP / TAPE	Bianchi Hexagon tape, 2.5 mm thickness, black
SADDLE	Velomann Mitora 139.1, steel rails, length 250 mm, width 139 mm

WHEELSET	Velomann V30R, alloy, internal channel width 23 mm, profile height 30 mm, 2 to 1 spoke pattern, j-bend spokes, black, HG11 body, weight: 1790 g
TIRE	Pirelli P7 Sport, 32-622, Techbelt
SHIFTER	Shimano 105 Di2, shifter lever ST-R7170, caliper BR-R7170
REAR DERAILLEUR	Shimano 105 Di2, RD-R7150, 12sp
FRONT DERAILLEUR	Shimano 105 Di2, FD-R7150
CRANKSET	Shimano 105, FC-R7100, Hollowtech 2, 50x34T Crank length: 170 mm (47-53 cm); 172.5 mm (55-59 cm); 175 mm (61 cm)
BOTTOM BRACKET	Token Ninja Lite premium bearings
CHAIN	Shimano 105, CN-M7100
CASSETTE / FREEWHEEL	Shimano 105, CS-R7100 11-34T, 11-12-13-14-15-17-19-21-24-27-30-34T
BRAKE LEVER	Included in the shifter
BRAKE	Shimano BR-R7170 Hydraulic disc brake
FRONT DISK ROTOR	Shimano SM-RT70 Center Lock with Ice Tech, 160 mm
REAR DISK ROTOR	Shimano SM-RT70 Center Lock with Ice Tech, 160 mm

INFINITO | 105 12SP | YTB5D



The image shown is indicative only. Components and graphic detail may differ from actual model. Bianchi reserves the right to amend specifications and/or prices.

COLOR	2K: CK16 celeste glossy / black decals 2M: Purple black – glossy/ black - matt decals
FRAME	INFINITO carbon ICR - 1.5"- 1.5", Disc Brake, Mechanical/Electronic Di2, compatible with 32" tire, BBset pressfit 86,5x41, rear dropout 12 x 142mm thru axle sizes 47-50-53-55-57-59-61cm
HEADSET	Acros/FSA for ICR cable routing
FORK	Full Carbon ICR - 28"- 300mm - 1.5" , dropout 12 x 100mm thru axle
SHIFTER	105 hydraulic disc brake for road ST-R7120(L), ST-R7120 (R)
REAR DERAILLEUR	Shimano 105 12sp RD-R7100, 105 12-speed, max 36T
FRONT DERAILLEUR	Shimano 105 12sp FD-R7100, brazed-on type
CRANKSET	105 12sp FC-R7100, hollowtech 2, for rear 12- speed, 170-172,5-175mm, 50x34T Crank Length: 170mm-47~53cm, 172.5mm-55~59cm, 175-61cm
BOTTOM BRACKET	Shimano KSMBB7241B pressfit
CHAIN	Shimano CN-M6100, 12-speed

CASSETTE / FREEWHEEL	105 12sp 11-34T CS-R7100, 12-SPEED,11-12-13-14-15-17-19-21-24-27-30-34T
BRAKE	Shimano BR-R7170 Hydraulic disc brake included in the shifter
DISC ROTOR	Shimano RT-CL800, 160mm front rear
RIM/WHEELSET	Velomann Palladium, 33mm profile, 700x21c, 24h, HG11 body, spoke pattern 2 to 1, tubeless-ready, set 1450 gr, sealed cartridge bearings
TIRE	Pirelli Cinturato™ Velo TLR 32mm (622-32), ArmourTech
STEM	Velomann Viper, Alloy 6061, raise - 7°, Oversize, 1 1/8" Ext: 90mm-47cm, 100mm-50'53cm, 110mm-55~57cm, 120mm-59~61cm
HANDLEBAR	Velomann Compact, Flat Top, alloy 6061 diam. 31,8mm, reach 80mm, drop 130mm Size: 400mm-47~53cm,420mm-55~57cm, 440mm-59"61cm
GRIP / TAPE	Bianchi Hexagon tape, 2.5mm thickness, full black
SEATPOST	Velomann, custom D-shape, alloy shaft 2014, head alloy 6061, Setback 25mm L350mm =47›57cm; L380mm= 59›61cm
SADDLE	Velomann Mitora139, 139x250mm rail in Aisi

INFINITO | 105 12SP | YTB7D



The image shown is indicative only. Components and graphic detail may differ from actual model. Bianchi reserves the right to amend specifications and/or prices.

COLOR	2K: CK16 celeste glossy / black decals 2M: Purple black - glossy/ black - matt decals
FRAME	INFINITO carbon ICR - 1.5"- 1.5", Disc Brake, Mechanical/Electronic Di2, compatible with 32" tire, BBset pressfit 86,5x41, rear dropout 12 x 142mm thru axle sizes 47-50-53-55-57-59-61cm
HEADSET	Acros/FSA for ICR cable routing
FORK	Full Carbon ICR - 28"- 300mm - 1.5" , dropout 12 x 100mm thru axle
SHIFTER	105 hydraulic disc brake for road ST-R7120(L), ST-R7120 (R)
REAR DERAILLEUR	Shimano 105 12sp RD-R7100, 105 12-speed, max 36T
FRONT DERAILLEUR	Shimano 105 12sp FD-R7100, brazed-on type
CRANKSET	105 12sp FC-R7100, hollowtech 2, for rear 12- speed, 170-172,5-175mm, 50x34T Crank Length: 170mm-47~53cm, 172.5mm-55~59cm, 175-61cm
BOTTOM BRACKET	Shimano KSMBB7241B pressfit
CHAIN	Shimano CN-M6100, 12-speed

CASSETTE / FREEWHEEL	105 12sp 11-34T CS-R7100, 12-SPEED,11-12-13-14-15-17-19-21-24-27-30-34T
BRAKE	Shimano BR-R7170 Hydraulic disc brake included in the shifter
DISC ROTOR	Shimano SM-RT70, 160mm front rear
RIM/WHEELSET	Velomann alloy, disc brake, rim profile 30mm, hub TC j-bend, round spokes 2mm black, clincher 622x19C,w\tape, front HH12 - rear HH12/142
TIRE	Pirelli P7 Sport 32mm (622-32), TechBelt, 60tpi
STEM	Velomann Viper, Alloy 6061, raise - 7°, Oversize, 1 1/8" Ext: 90mm-47cm, 100mm-50'53cm, 110mm-55~57cm, 120mm-59~61cm
HANDLEBAR	Velomann Compact, Flat Top, alloy 6061 diam. 31,8mm, reach 80mm, drop 130mm Size: 400mm-47~53cm,420mm-55~57cm, 440mm-59"61cm
GRIP / TAPE	Bianchi Hexagon tape, 2.5mm thickness, full black
SEATPOST	Velomann, custom D-shape, alloy shaft 2014, head alloy 6061, Setback 25mm L350mm =47>57cm; L380mm= 59>61cm
SADDLE	Velomann Mitora139, 139x250mm rail in Aisi

CYCLOCROSS

ZOLDER PRO

ZOLDER PRO | GRX 610 1X12SP | YUB51



The image shown is indicative only. Components and graphic detail may differ from actual model. Bianchi reserves the right to amend specifications and/or prices.

COLOR	YD: Celestial Reef / Glossy YE: Savanna Green / Glossy
FRAME	Zolder Pro carbon cyclocross disc brake flat mount, press fit 86.5x41 headset 1.5" - 11/8", thru axle 12x142 sizes 48-50-52-54-56-58-cm
SEATPOST CLAMP	MX-112C Aluminium clamp, light weight, 31,8mm anti-crimp, black
HEADSET	Fsa Orbit C-40-ACB ; NO.42/ACB, Sealed 1-1/8 ACB Top, 1.5" ACB Btm ; Standard 15mm top cover alloy
FORK	Full carbon 1.5" - 11/8", disc brake flat mount, 1.5" - 11/8", thru axle 12x100
SHIFTER	Shimano GRX 610 12sp Hydraulic disc brake
REAR DERAILLEUR	Shimano GRX 820, 12 speed
CRANKSET	Shimano GRX 610 12sp FC-RX610-1, GRX, 12-speed, 2-pcs FC, 170-172.5-175mm, 40T Crank Length: 170mm-48/52, 172.5mm-54/58
BOTTOM BRACKET	Token Ninja Lite BB4124PS, for 24mm spindle, with premium bearings, threaded design
CHAIN	Shimano CN-M6100,12 speed
CASSETTE / FREEWHEEL	Shimano 105 12sp 11-34T 11-12-13-14-15-17-19-21-24-27-30-34T

BRAKE	Shimano BR-RX410 flat mount hydraulic disc brake included in the shifter
BRAKE LEVER	included
DISC ROTOR	Shimano SM-RT70 rotor for disc brake center lock , with Ice Technology, S 160mm
RIM/WHEELSET	Velomann V30R, alloy, 23mm channel, 30mm profile. 2 to 1 spoke pattern, j-bend spokes, black, HG11 boby, weight : 1790g
TIRE	Vittoria Terreno Mix 33-622/700x33c G2.0, nylon 120TPI, TLR reinforced, color black/black antracite
STEM	Velomann ST199A.2 3D Forged alloy 2014, raise - 8°, height 38mm, Oversize, 1 1/8", sandblast matt finish Ext: 90mm-48-50cm,100mm-52~54cm,110mm-56cm,120mm-58cm
HANDLEBAR	Velomann RA35A Compact, Flat Top, alloy 6061 diam. 31,8mm, reach 80mm, drop 130mm, Size: 400mm- 48~50cm; 420mm-52~58cm ,440mm-58cm
GRIP / TAPE	Bianchi Hexagon tape, 2.5mm thickness, full black
SEATPOST	Velomann SP67T.C carbon shaft UD finish, forged alloy head, 15mm offset L350mm, 27,2mm
SADDLE	Selle Italia Model X SuperFlow

ZOLDER PRO | ULTEGRA 2X12SP | YUB52



The image shown is indicative only. Components and graphic detail may differ from actual model. Bianchi reserves the right to amend specifications and/or prices.

COLOR	YD: Celestial Reef / Glossy YE: Savanna Green / Glossy
FRAME	Zolder Pro carbon cyclocross disc brake flat mount, press fit 86.5x41 headset 1.5" - 11/8", thru axle 12x142 sizes 48-50-52-54-56-58-cm
SEATPOST CLAMP	MX-112C Aluminium clamp, light weight, 31,8mm anti-crimp, black
HEADSET	Fsa Orbit C-40-ACB ; NO.42/ACB, Sealed 1-1/8 ACB Top, 1.5" ACB Btm ; Standard 15mm top cover alloy
FORK	Full carbon 1.5" - 11/8", disc brake flat mount, 1.5" - 11/8", thru axle 12x100
SHIFTER	Shimano Ultegra Di2 hydraulic disc brake for road
REAR DERAILLEUR	Ultegra Di2 12sp RD-R8150, Ultegra Di2 12-speed
FRONT DERAILLEUR	Shimano Ultegra Di2 12sp FD-R8150, Ultegra Di2, 12-speed
CRANKSET	Shimano Ultegra 12sp FC-R8100, hollowtech 2, for rear 12- speed, 170-172mm, 46x36T Crank Length: 170mm-48~54cm, 172.5mm-56~58cm
BOTTOM BRACKET	Token Ninja Lite BB4124PS, for 24mm spindle, with premium bearings, threaded design
CHAIN	Shimano CN-M6100,12 speed

CASSETTE / FREEWHEEL	Shimano 105 12sp 11-34T 11-12-13-14-15-17-19-21-24-27-30-34T
BRAKE	BR-R8170 Hydraulic disc brake included in the shifter
BRAKE LEVER	included
DISC ROTOR	Shimano RT-CL800 center lock type w/Ice Tech, 160mm front rear
RIM/WHEELSET	Velomann V30R, alloy, 23mm channel, 30mm profile. 2 to 1 spoke pattern, j-bend spokes, black, HG11 boby, weight : 1790g
TIRE	Vittoria Terreno Mix 33-622/700x33c G2.0, nylon 120TPI, TLR reinforced, color black/black antracite
STEM	Velomann ST199A.2 3D Forged alloy 2014, raise - 8°, height 38mm, Oversize, 1 1/8", sandblast matt finish Ext: 90mm-48-50cm,100mm-52~54cm,110mm-56cm,120mm-58cm
HANDLEBAR	Velomann RA35A Compact, Flat Top, alloy 6061 diam. 31,8mm, reach 80mm, drop 130mm, Size: 400mm- 48~50cm; 420mm-52~58cm ,440mm-58cm
GRIP / TAPE	Bianchi Hexagon tape, 2.5mm thickness, full black
SEATPOST	Velomann SP67T.C carbon shaft UD finish, forged alloy head, 15mm offset L350mm, 27,2mm
SADDLE	Selle Italia Model X SuperFlow

ZOLDER PRO | FRAMESET | XUB26



ONLY FRAMESET

The image shown is indicative only. Components and graphic detail may differ from actual model. Bianchi reserves the right to amend specifications and/or prices.

COLORS	YD - Celestial Reef [Full Glossy] YE - Savanna Green [Full Glossy]
FRAME	Bianchi Zolder Pro, Carbon, Disc brake flat mount, Pressfit 86.5x41, headset 1.5" - 1" 1/8, Thru axle 12x142 mm sizes 48-50-52-54-56-58
SEATPOST CLAMP	Bianchi Aluminium, diameter 31.8 mm
SEATPOST	-
HEADSET	FSA Orbic C-40-ACB
FORK	Bianchi Zolder Pro, Carbon, Disc brake flat mount, 1.5" head, Thru axle 12x100 mm

TIME TRIAL TRIATHLON

AQUILA

AQUILA RC | FRAMESET | XUB56



The image shown is indicative only. Components and graphic detail may differ from actual model. Bianchi reserves the right to amend specifications and/or prices.

COLORS	ZY - Metallic Celeste / Carbon UD Black [Full Glossy]
FRAME	Bianchi AQUILA, Disc brake: Flat Mount 140/160, Bottom bracket: PressFit 86.5x41, Thru axle: 12x142 mm, Max chainring: 58T (2x) - 62T (1x), Max tire clearance: ETRTO 622-28 mm sizes SM-MD-LG
SEATPOST CLAMP	Bianchi Custom
SEATPOST	Bianchi Custom Airfoil Shape, Offset: Ritchey Rail length: 280 mm (SM); 300 mm (MD); 350 mm (LG)
HEADSET	FSA Custom
FORK	Bianchi Aquila, Disc brake: Flat Mount 140/160, Thru axle: 12x100 mm, Max tire clearance: ETRTO 622-28 mm, Steering tube diameter: 1 1/8""

NEW

AQUILA | DURA ACE DI2 4IIII PWM | YUB56



The image shown is indicative only. Components and graphic detail may differ from actual model. Bianchi reserves the right to amend specifications and/or prices.

COLORS	ZY - Metallic Celeste / Carbon UD Black [Full Glossy] AD - White / Petrol Green - Mint [Full Glossy]
FRAME	Bianchi AQUILA, Disc brake: Flat Mount 140/160, Bottom bracket: PressFit 86.5x41, Thru axle: 12x142 mm, Max chainring: 58T (2x) - 62T (1x), Max tire clearance: ETRTO 622-28 mm sizes SM-MD-LG
SEATPOST CLAMP	Bianchi Custom
SEATPOST	Bianchi Custom Airfoil Shape, Offset: Ritchey Rail length: 280 mm (SM); 300 mm (MD); 350 mm (LG)
HEADSET	FSA Custom
FORK	Bianchi Aquila, Disc brake: Flat Mount 140/160, Thru axle: 12x100 mm, Max tire clearance: ETRTO 622-28 mm, Steering tube diameter: 1 1/8"
STEM	Bianchi Included in the handlebar
HANDLEBAR	Bianchi Reparto Corse by Vision, Diameter of steering tube interface: 1 1/8", Misura: 110/400 mm (SM-MD-LG) - Extensions: Vision JS bend Carbon, comaptible with Vision TFE extensions (not incluse), bridge for TFE not included
GRIP / TAPE	Bianchi Hexagon tape, 2.5 mm thickness, black
SADDLE	Selle Italia Watt, 3D, Carbon rail, Triathlon specific

WHEELSET	Bianchi Reparto Corse RC50R/RC65R SPBTech, Carbon rim, front: profile height 50 mm, rear: profile height 65 mm, 700x21c, 24h, 3K and UD carbon, HG11 body, weight: 1520 g
TIRE	Pirelli P Zero Race SL TLR, 28-622, 120 TPI
SHIFTER	Shimano Dura-Ace Di2, shifter lever ST-R9270; Sprint shifter SW-R9160
REAR DERAILLEUR	Shimano Dura-Ace Di2, RD-R9250, 12sp
FRONT DERAILLEUR	Shimano Dura-Ace Di2, FD-R9250
CRANKSET	Shimano Dura-Ace, FC-R9200, 4iiii precision 3+ dual side power meter, 52x36T Crank length: 170 mm (SM); 172.5 mm (MD-LG)
BOTTOM BRACKET	Shimano SM-BB92-41B, press fit type for road
CHAIN	Shimano Dura-Ace, CN-M9100
CASSETTE / FREEWHEEL	Shimano Dura-Ace, CS-R9200 11-30T, 11-12-13-14-15-16-17-19-21-24-27-30T
BRAKE LEVER	Included in the shifter
BRAKE	Shimano BR-R9270 Hydraulic disc brake
FRONT DISK ROTOR	Shimano RT-CL900 Center Lock with Ice Tech, 160 mm
REAR DISK ROTOR	Shimano RT-CL900 Center Lock with Ice Tech, 160 mm

NEW

AQUILA | FORCE ETAP AXS E1 | YUB57



The image shown is indicative only. Components and graphic detail may differ from actual model. Bianchi reserves the right to amend specifications and/or prices.

COLORS	ZY - Metallic Celeste / Carbon UD Black [Full Glossy] AD - White / Petrol Green - Mint [Full Glossy]
FRAME	Bianchi AQUILA, Disc brake: Flat Mount 140/160, Bottom bracket: PressFit 86.5x41, Thru axle: 12x142 mm, Max chainring: 58T (2x) - 62T (1x), Max tire clearance: ETRTO 622-28 mm sizes SM-MD-LG
SEATPOST CLAMP	Bianchi Custom
SEATPOST	Bianchi Custom Airfoil Shape, Offset: Ritchey Rail length: 280 mm (SM); 300 mm (MD); 350 mm (LG)
HEADSET	FSA Custom
FORK	Bianchi Aquila, Disc brake: Flat Mount 140/160, Thru axle: 12x100 mm, Max tire clearance: ETRTO 622-28 mm, Steering tube diameter: 1 1/8"
STEM	Bianchi Included in the handlebar
HANDLEBAR	Bianchi Reparto Corse by Vision, Diameter of steering tube interface: 1 1/8", Misura: 110/400 mm (SM-MD-LG) - Extensions: Vision JS bend Carbon, comaptible with Vision TFE extensions (not incluse), bridge for TFE not included
GRIP / TAPE	Bianchi Hexagon tape, 2.5 mm thickness, black
SADDLE	Selle Italia Watt, 3D, Manganese rail, Triathlon specific

WHEELSET	Velomann Plutonium, Carbon rim, 50 mm profile, 700x21c, 24h, XDR body
TIRE	Pirelli P Zero Race SL TLR, 28-622, 120 TPI
SHIFTER	Sram S-900 Aero HRD with Remore Switch
REAR DERAILLEUR	Sram Force AXS E1, 12sp
FRONT DERAILLEUR	Sram Force AXS E1
CRANKSET	Sram Force E1, 50x37T Crank length: 165 mm (SM) 170 mm (MD); 172.5 mm (LG)
BOTTOM BRACKET	Sram Press fit Road 86.5x41
CHAIN	Sram Force E1
CASSETTE / FREEWHEEL	Sram Force XG 1270 E1, 10-33, 10-11-12-13-14-15-17-19-21-24-28-33T
BRAKE LEVER	Included in the shifter
BRAKE	Sram Force E1, Hydraulic disc brake
FRONT DISK ROTOR	Sram Paceline, Center Lock, 160 mm
REAR DISK ROTOR	Sram Paceline, Center Lock, 160 mm

NEW

AQUILA | RIVAL ETAP AXS E1 | YUB58



The image shown is indicative only. Components and graphic detail may differ from actual model. Bianchi reserves the right to amend specifications and/or prices.

COLORS	ZY - Metallic Celeste / Carbon UD Black [Full Glossy] AD - White / Petrol Green - Mint [Full Glossy]
FRAME	Bianchi AQUILA, Disc brake: Flat Mount 140/160, Bottom bracket: PressFit 86.5x41, Thru axle: 12x142 mm, Max chainring: 58T (2x) - 62T (1x), Max tire clearance: ETRTO 622-28 mm sizes SM-MD-LG
SEATPOST CLAMP	Bianchi Custom
SEATPOST	Bianchi Custom Airfoil Shape, Offset: Ritchey Rail length: 280 mm (SM); 300 mm (MD); 350 mm (LG)
HEADSET	FSA Custom
FORK	Bianchi Aquila, Disc brake: Flat Mount 140/160, Thru axle: 12x100 mm, Max tire clearance: ETRTO 622-28 mm, Steering tube diameter: 1 1/8"
STEM	Bianchi Included in the handlebar
HANDLEBAR	Bianchi Reparto Corse by Vision, Diameter of steering tube interface: 1 1/8", Misura: 110/400 mm (SM-MD-LG) - Extensions: Vision JS bend Carbon, comaptible with Vision TFE extensions (not incluse), bridge for TFE not included
GRIP / TAPE	Bianchi Hexagon tape, 2.5 mm thickness, black
SADDLE	Selle Italia Watt, 3D, Manganese rail, Triathlon specific

WHEELSET	Velomann V30R, alloy, internal channel width 23 mm, profile height 30 mm, 2 to 1 spoke pattern, j-bend spokes, black, XDR body, weight: 1790 g
TIRE	Pirelli P Zero Race SL TLR, 28-622, 120 TPI
SHIFTER	Sram S-900 Aero HRD with Remore Switch
REAR DERAILLEUR	Sram Rival AXS E1, 12sp
FRONT DERAILLEUR	Sram Rival AXS E1
CRANKSET	Sram Rival E1, 48x35T Crank length: 165 mm (SM) 170 mm (MD); 172.5 mm (LG)
BOTTOM BRACKET	Sram Press fit Road 86.5x41
CHAIN	Sram Rival E1
CASSETTE / FREEWHEEL	Sram Rival XG 1250 D1, 10-36, 10-11-12-13-15-17-19-21-24-28-32-36T
BRAKE LEVER	Included in the shifter
BRAKE	Sram Rival E1, Hydraulic disc brake
FRONT DISK ROTOR	Sram Centerline, Center Lock, 160 mm
REAR DISK ROTOR	Sram Centerline, Center Lock, 160 mm



GRAVEL

RACING | ADVENTURE

IMPULSO RC | IMPULSO PRO | IMPULSO COMP

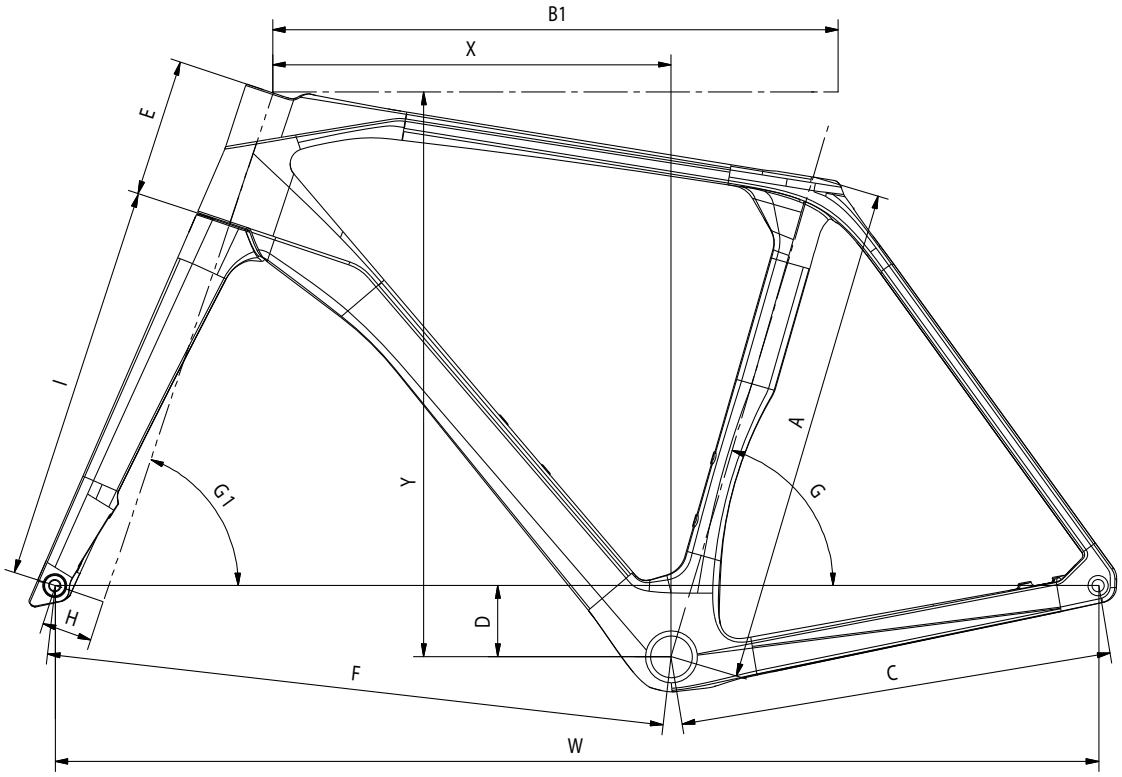

Impulso RC / Impulso PRO / Impulso COMP													
SIZE	A	B1	C	D	E	F	G	G1	H	I	X	Y	W
XS	410	515	425	70	100	592	75°	70,5°	50	391	376	517	1007
SM	450	526	425	70	118	600	74,5°	70,5°	50	391	378	534	1014
MD	490	550	425	70	135	610	74°	71,5°	50	391	391	554	1025
LG	520	572	426	70	162	628	73,5°	71,5°	50	391	401	580	1045
XL	550	600	428	70	190	645	73°	72°	50	391	414	608	1064

IMPULSO RC INTEGRATED HANDLEBAR

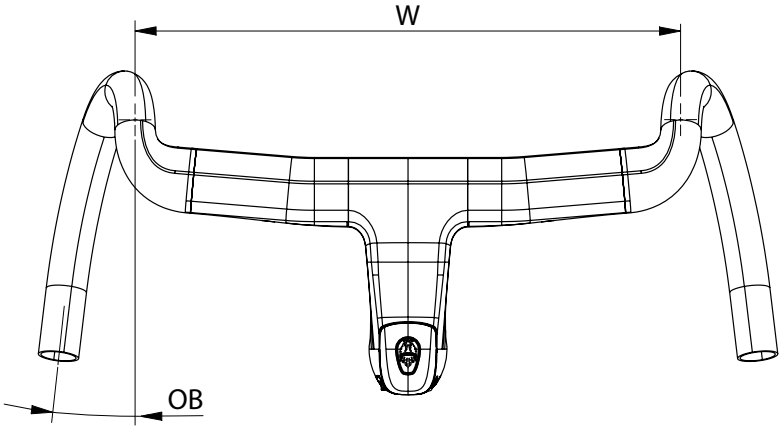

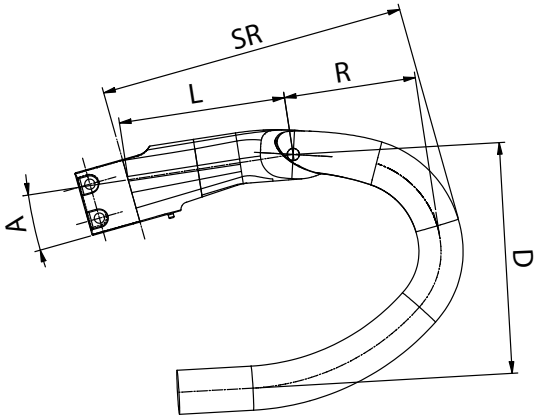

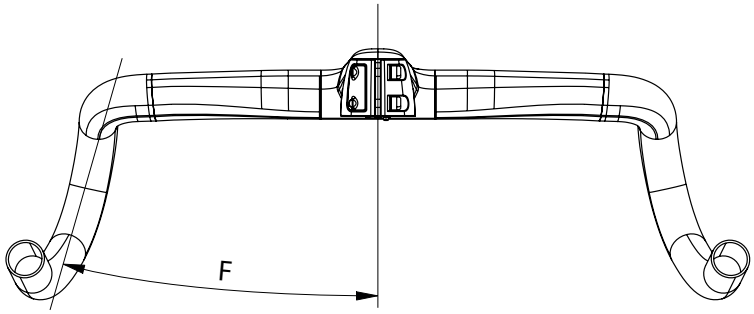

Impulso RC Integrated Handlebar								
Size	Width (W)	Lenght (L)	Reach (R)	Drop (D)	Stem/HB reach (SR)	Outward bend (OB)	Flare (F)	Angle (A)
90x400	400	90	72,6	119,3	167	6,8°	16°	-7°
90x420	420	90	72,6	119,3	167	6,8°	16°	-7°
100x400	400	100	72,6	119,3	177	6,8°	16°	-7°
100x420	420	100	72,6	119,3	177	6,8°	16°	-7°
110x400	400	110	72,6	119,3	187	6,8°	16°	-7°
110x420	420	110	72,6	119,3	187	6,8°	16°	-7°
110x440	440	110	72,6	119,3	187	6,8°	16°	-7°
120x420	420	120	72,6	119,3	197	6,8°	16°	-7°
120x440	440	120	72,6	119,3	197	6,8°	16°	-7°

IMPULSO RC | RED XPLR AXS 13V | YVB80



Immagine a scopo indicativo. Componenti e dettagli grafici potrebbero non corrispondere al modello reale. Bianchi si riserva il diritto di modificare le specifiche.

COLORI	FG - Celeste metallico/CK16 - Grafite [Opaco] G7 - Raudibotn camo - Sabbia [Lucido]
TELAIO	Bianchi Impulso RC, Flat mount 140/160, PressFit 86.5x41 mm, Deragliatore posteriore: aggancio Sram UDH, Compatibilità max corone anteriori: 46-52T Shimano, 43-48T Sram, Passaggio copertura: ETRTO 622-42, Materiale: Fibra di Carbonio taglie XS-SM-MD-LG-XL
MORSETTO REGGISELLA	Bianchi Personalizzato
REGGISELLA	Bianchi Impulso, carbonio, sezione aero, offset 20 mm lunghezza: 300 mm (XS); 350 mm (SM-MD); 380 mm (LG-XL)
SERIE STERZO	Acros Cavi integrati
FORCELLA	Bianchi Impulso, Pinza Flat mount 140/160, Perno passante, OLD: 100 mm, Passaggio copertura: ETRTO 622-42 mm, Diametro cannotto sterzo: 1" 1/8, Materiale: Fibra di Carbonio
ATTACCO MANUBRIO	Bianchi Reparto Corse manubrio integrato, carbonio, per serie sterzo Acros Cavi integrati, drop 120 mm, reach 80 mm, flare 16° Taglie: 90/400 mm (XS-MD) ; 100/400 mm (LG); 110/420 mm (XL)
MANUBRIO	Incluso nell'attacco
MANOPOLE / NASTRO	Bianchi nastro Hexagon, spessore 2,5 mm, nero
SELLA	Bianchi Reparto Corse RC139 Carbon, 139x250 mm, full carbon

RUOTE	Bianchi Reparto Corse RC43, cerchio in Carbonio, altezza profilo 43 mm, 700x24,5C, corpetto XDR
COPERTURE	Pirelli Cinturato Gravel RC, 700x40, 60 TPI, TLR
COMANDI	Sram Red AXS E1
DERAGLIATORE POSTERIORE	Sram Red XPLR AXS E1, 13v
DERAGLIATORE ANTERIORE	no_code
GUARNITURA	Sram Red XPLR, con powermeter Quark, 42T Lunghezza pedivella: 170 mm (XS-SM); 172.5 mm (MD-LG); 175 mm (XL)
MOVIMENTO CENTRALE	Sram Press fit Road Wide 86,5x41
CATENA	Sram Red E1
CASSETTA / RUOTA LIBERA	Sram XG-1391, 10-46T, 10-11-12-13-15-17-19-21-24-28-32-38-46T
LEVE FRENO	Inclusa nel comando
PINZE FRENO	Sram Red AXS E1, Freno a disco idraulico
ROTORE ANTERIORE	Sram Paceline X, Center Lock, 160 mm
ROTORE POSTERIORE	Sram Paceline X, Center Lock, 160 mm

IMPULSO RC | GRX 825 DI2 12SP | YVB81



The image shown is indicative only. Components and graphic detail may differ from actual model. Bianchi reserves the right to amend specifications and/or prices.

COLORS	FG - Metallic Celeste/CK16 - Graphite [Full Matt] G7 - Raudibotn camo - Sand [Full Glossy]
FRAME	Bianchi Impulso RC, Flat mount disc 140/160, PressFit 86.5x41 mm, Thru axle, OLD: 142 mm, Front derailleur: brazed-on type, Rear derailleur: Sram UDH hanger type, Max chainring compatibility: 46-52T Shimano, 43-48T Sram, Tire clearance: ETRTO 622-42, Material: Carbon Fiber composite sizes XS-SM-MD-LG-XL
SEATPOST CLAMP	Bianchi Custom
SEATPOST	Bianchi Impulso, full carbon, aero shape, 20 mm offset length: 300 mm (XS); 350 mm (SM-MD); 380 mm (LG-XL)
HEADSET	Acros for internal cable routing
FORK	Bianchi Impulso, Flat mount disc 140/160, Thru axle, OLD: 100 mm, Tire clearance: ETRTO 622-42 mm, Steerer tube diameter: 1" 1/8, Material: Carbon Fiber composite
STEM	Bianchi Reparto Corse integrated handlebar, carbon, for Acros Integrated Cable Routing headset, drop 120 mm, reach 80 mm, flare 16° Size: 90/400 mm (XS-MD) ; 100/400 mm (LG); 110/420 mm (XL)
HANDLEBAR	Included in the stem
GRIP / TAPE	Bianchi Hexagon tape, 2.5 mm thickness, black
SADDLE	Bianchi Reparto Corse RC139 Carbon, 139x250 mm, full carbon

WHEELSET	Bianchi Reparto Corse RC43, Carbon rim, profile height 43 mm, 700x24,5c, HG11 body
TIRE	Pirelli Cinturato Gravel RC, 700x40, 60 TPI, TLR
SHIFTER	Shimano GRX, shifter lever ST-RX825 Di2, caliper BR-RX820
REAR DERAILLEUR	Shimano GRX Di2, RD-RX825, 12sp
FRONT DERAILLEUR	Shimano GRX Di2, FD-RX825
CRANKSET	Shimano GRX, FC-RX820, 48x31T Crank length: 170 mm (XS-SM); 172.5 mm (MD-LG); 175 mm (XL)
BOTTOM BRACKET	Shimano SM-BB72-41B, press fit type for road
CHAIN	Shimano 105, CN-M7100
CASSETTE / FREEWHEEL	Shimano 105, CS-R7101 11-36T, 11-12-13-14-15-17-19-21-24-28-32-36T
BRAKE LEVER	Included in the shifter
BRAKE	Shimano BR-RX820 Hydraulic disc brake
FRONT DISK ROTOR	Shimano RT-CL800 Center Lock with Ice Tech, 160 mm
REAR DISK ROTOR	Shimano RT-CL800 Center Lock with Ice Tech, 160 mm

NEW

IMPULSO RC | FRAMESET | XTB12



ONLY FRAMESET

The image shown is indicative only. Components and graphic detail may differ from actual model. Bianchi reserves the right to amend specifications and/or prices.

COLORS	FG - Metallic Celeste/CK16 - Graphite [Full Matt] G7 - Raudibotn camo - Sand [Full Glossy]
FRAME	Bianchi Impulso RC, Flat mount disc 140/160, PressFit 86.5x41 mm, Thru axle, OLD: 142 mm, Front derailleur: brazed-on type, Rear derailleur: Sram UDH hanger type, Max chainring compatibility: 46-52T Shimano, 43-48T Sram, Tire clearance: ETRTO 622-42, Material: Carbon Fiber composite sizes XS-SM-MD-LG-XL
SEATPOST CLAMP	Bianchi Custom
SEATPOST	Bianchi Impulso, full carbon, aero shape, 20 mm offset length: 300 mm (XS); 350 mm (SM-MD); 380 mm (LG-XL)
HEADSET	Acros Integrated Cable Routing
FORK	Bianchi Impulso, Flat mount disc 140/160, Thru axle, OLD: 100 mm, Tire clearance: ETRTO 622-42 mm, Steerer tube diameter: 1" 1/8, Material: Carbon Fiber composite

IMPULSO PRO | GRX 820 12SP | YTB83



The image shown is indicative only. Components and graphic detail may differ from actual model. Bianchi reserves the right to amend specifications and/or prices.

COLORS	GK - Terra camo - Graphite [Full Matt] F1 - CK16 - Graphite [Full Matt] F4 - Grey - Black [Full Matt]
FRAME	Bianchi Impulso, Flat mount disc 140/160, PressFit 86.5x41 mm, Thru axle, OLD: 142 mm, Rear derailleur: Sram UDH hanger type, Max chainring compatibility: 46-52T Shimano, 43-48T Sram, Tire clearance: ETRTO 622-42, Material: Carbon Fiber composite sizes XS-SM-MD-LG-XL
SEATPOST CLAMP	Bianchi Custom
SEATPOST	Bianchi Impulso, full carbon, aero shape, 20 mm offset length: 300 mm (XS); 350 mm (SM-MD); 380 mm (LG-XL)
HEADSET	Acros for internal cable routing
FORK	Bianchi Impulso, Flat mount disc 140/160, Thru axle, OLD: 100 mm, Tire clearance: ETRTO 622-42 mm, Steerer tube diameter: 1" 1/8, Material: Carbon Fiber composite
STEM	Velomann AL6061, fully internal cable routing stem, compatible with Acros ICR system Size: 80 mm (XS-SM); 90 mm (MD); 100 mm (LG); 110 mm (XL)
HANDLEBAR	Velomann Gravel, Aluminium, diameter 31.8 mm, reach 70 mm, drop 130 mm, flare 16 deg Size: 400 mm (XS-SM); 420 mm (MD-LG); 440 mm (XL)
GRIP / TAPE	Bianchi Hexagon tape, 2.5 mm thickness, black
SADDLE	Velomann Mitora 149 Hyper, Carbon rails, length 250 mm, width 149 mm

WHEELSET	Velomann Terbium, Carbon rim, 30 mm profile, 700x24,5, XDR body
TIRE	Pirelli Cinturato Gravel H Classic, 40-622
SHIFTER	Shimano GRX, shifter lever ST-RX820, caliper BR-RX820
REAR DERAILLEUR	Shimano GRX, RD-RX820, 12sp
FRONT DERAILLEUR	Shimano GRX, FD-RX820
CRANKSET	Shimano GRX, FC-RX820, 48x31T Crank length: 170 mm (XS-SM); 172.5 mm (MD-LG); 175 mm (XL)
BOTTOM BRACKET	Shimano SM-BB72-41B, press fit type for road
CHAIN	Shimano 105, CN-M7100
CASSETTE / FREEWHEEL	Shimano 105, CS-R7101 11-36T, 11-12-13-14-15-17-19-21-24-28-32-36T
BRAKE LEVER	Included in the shifter
BRAKE	Shimano BR-RX820 Hydraulic disc brake
FRONT DISK ROTOR	Shimano RT-CL800 Center Lock with Ice Tech, 160 mm
REAR DISK ROTOR	Shimano RT-CL800 Center Lock with Ice Tech, 160 mm

IMPULSO COMP | GRX 610 12SP | YUB86



The image shown is indicative only. Components and graphic detail may differ from actual model. Bianchi reserves the right to amend specifications and/or prices.

COLORS	GH - Metallic Celeste camo - Dark Metallic Celeste [Full Glossy] F8 - Terra - Black [Full Glossy] F7 - CK16 - Graphite [Full Glossy]
FRAME	Bianchi Impulso, Flat mount disc 140/160, PressFit 86.5x41 mm, Thru axle, OLD: 142 mm, Sram UDH, Max chainring: 46-52T Shimano, 43-48T Sram, Tire clearance: ETRTO 622-42, Material: Carbon Fiber sizes XS-SM-MD-LG-XL
SEATPOST CLAMP	Bianchi Custom
SEATPOST	Bianchi Impulso, full carbon, aero shape, 20 mm offset length: 300 mm (XS); 350 mm (SM-MD); 380 mm (LG-XL)
HEADSET	Acros for internal cable routing
FORK	Bianchi Impulso, Flat mount disc 140/160, Thru axle, OLD: 100 mm, Tire clearance: ETRTO 622-42 mm, Steerer tube diameter: 1" 1/8, Material: Carbon Fiber composite
STEM	Velomann AL6061, fully internal cable routing stem, compatible with Acros ICR system Size: 80 mm (XS-SM); 90 mm (MD); 100 mm (LG); 110 mm (XL)
HANDLEBAR	Velomann Gravel, Aluminium, diameter 31.8 mm, reach 70 mm, drop 130 mm, flare 16 deg Size: 400 mm (XS-SM); 420 mm (MD-LG); 440 mm (XL)
GRIP / TAPE	Bianchi Hexagon tape, 2.5 mm thickness, black
SADDLE	Velomann Mitora 149 H1, AISI rails, length 250 mm, width 149 mm

WHEELSET	Velomann V24G, Aluminium rim, profile height 24 mm, 700x24c, 24h, Campagnolo body
TIRE	Pirelli Cinturato Gravel H Classic, 40-622
SHIFTER	Shimano GRX, shifter lever ST-RX610, caliper BR-RX400
REAR DERAILLEUR	Shimano GRX, RD-RX820, 12sp
FRONT DERAILLEUR	Shimano GRX, FD-RX820
CRANKSET	Shimano GRX, FC-RX610, 46x30T Crank length: 170 mm (XS-SM); 172.5 mm (MD-LG); 175 mm (XL)
BOTTOM BRACKET	Shimano SM-BB72-41B, press fit type for road
CHAIN	Shimano 105, CN-M7100
CASSETTE / FREEWHEEL	Shimano 105, CS-R7101 11-36T, 11-12-13-14-15-17-19-21-24-28-32-36T
BRAKE LEVER	Included in the shifter
BRAKE	Shimano BR-RX400 Hydraulic disc brake
FRONT DISK ROTOR	Shimano SM-RT70 Center Lock with Ice Tech, 160 mm
REAR DISK ROTOR	Shimano SM-RT70 Center Lock with Ice Tech, 160 mm

ARCADEX PRO | APEX/GX AXS DISC 1X12SP | YTB82



The image shown is indicative only. Components and graphic detail may differ from actual model. Bianchi reserves the right to amend specifications and/or prices.

COLOR	AF - CK16 / Green water - Matt AW - Forest Green / Graphite - Matt
FRAME	Arcadex PRO Disc Brake Specification: Flat Mount 140/160 Bottom Braket Standard: PressFit 86.5 X Ø41 Rear Axle: thru12 OLD (Over-Locknut-Dimension): 142 mm Front Derailleur: Non Compatible Rear Derailleur: SRAM UDH Hanger type Max Chainring Compatibility: 38T-44T Minimun Chainline: 45.5 mm Tire Clearance: ETRTO 622-50 mm SeatPost O.D: Ø27.2 mm Material: Epoxy - SM Carbon Fiber Composite
HEADSET	Bianchi Custom Acros ICR (Internal Cable Rounting) Spacers: 5 mm x1, 10 mm x3 Headtube Cover: Bianchi Costum Compresion Ring: 1.125 Inch Top Bearing: Angular contact Bearing 42x52x7 + seal Bottom Bearing: Angular contact Bearing 40x52x7 + seal Base Plate with seal, Steerer 1.5" (39.78 mm)
FORK	Suspension Fork: RockShox Rudy XPLR Travel: 30 mm Disc Brake Specification: Direct Flat Mount 160/180 Front Axle: thru12 OLD (Over-Locknut-Dimension): 100 mm Tire Clearance: ETRTO 622-50 mm Steer tube Diameter: Tapered 1 1/8" to 1.5" Fork Rake: 51 mm
SHIFTER	Sram Apex AXS HRD Shift System
REAR DERAILLEUR	Sram GX Eagle Transmission (T-type AXS)
CRANKSET	Sram Rival 1 WIDE 40T Crank Length: 170 mm-XS(47)-SM(51), 172.5 mm-MD(55)-LG(58), 175 mm-XL(61)
BOTTOM BRACKET	Sram DUB PressFit Road Wide 86.5 X Ø41

CHAIN	Sram GX Eagle Transmission Flattop
CASSETTE / FREEWHEEL	Sram GX Eagle Transmission, XS 1272 T-Type, 10-52T Driver Body Interface: XD
BRAKE	Sram APEX | Pad Type: Steel-Backed Organic
DISC ROTOR	Sram CenterLine Rotor Hub Interface: Centerlock Rotor Diameter: 160 mm (front&Rear)
WHEELSET	Velomann Terbium clincher and tubeless ready Rim Diameter: 700C Material: Carbon Rim Height: 30 mm Inner Wigth Channel: 25 mm
TIRE	Pirelli Cinturato™ GRAVEL M Classic, 45-622 tan sidewall
STEM	Velomann AICR Alloy Rise: -2° Steerer Diameter: 1-1/8" (28.6 mm) HB interface Diameter: 1-1/4" (31.8 mm) Stem Lengths: 80 mm - XS(47), 90 mm - SM(51), 100 mm-MD(55), 110 mm-LG(58),120 m -XL(61)
HANDLEBAR	Velomann Gravel ICR Alloy Flare: 16° | Drop: 130 mm | Reach 70 mm Interface Diameter: 1 1/4" (31.8 mm) HandleBar Widths: 400 - SX(47) SM(51), 420 - MD(55) LG(58), 440 -XL(61)
TAPE	Bianchi Hexagon tape 2.5 mm thickness, Full black
SEATPOST	Velomann Carbon UD SeatPost O.D: Ø27.2 mm | Seatpost lengths: 300 mm-SX(47), 350 mm-SM(51) MD(55), 400mm-LG(58) XL(61)"
SADDLE	Velomann MITORA 149 H1 cover: soft touch | padding: foam | shell: nylon carbon rails: Aisi Steel | lenght: 250 mm | width: 149 mm weight: 230g ± 2"

NEW

ARCADEX PRO | RIVAL XPLR AXS E1 12SP | YVB82



The image shown is indicative only. Components and graphic detail may differ from actual model. Bianchi reserves the right to amend specifications and/or prices.

COLORS	AF - CK16 - Green water [Full Matt] AW - Forest Green - Graphite - [Full Matt]
FRAME	Bianchi Arcadex, Carbon, Flat mount disc, PressFit 86.5x41 mm, Thru axle, OLD: 142 mm, Rear derailleur: Sram UDH hanger type, Tire clearance: ETRTO 622-50 sizes XS-SM-MD-LG-XL
SEATPOST CLAMP	Bianchi Custom
SEATPOST	Velomann Carbon, offset 15 mm, diameter 27.2 mm length: 300 mm (XS); 350 mm (SM-XL)
HEADSET	Acros for internal cable routing
FORK	RockShox Rudy, 30 mm travel, 1,5" tapered steerer, Thru axle 12x100 mm
STEM	Velomann AL6061, fully internal cable routing stem, compatible with Acros ICR system Size: 80 mm (XS-SM); 90 mm (MD); 100 mm (LG); 110 mm (XL)
HANDLEBAR	Velomann Gravel, Aluminium, diameter 31.8 mm, reach 70 mm, drop 130 mm, flare 16 deg Size: 400 mm (XS-SM); 420 mm (MD-LG); 440 mm (XL)
GRIP / TAPE	Bianchi Hexagon tape, 2.5 mm thickness, black
SADDLE	Velomann Mitora 149 H1, AISI rails, length 250 mm, width 149 mm

WHEELSET	Velomann Terbium, Carbon rim, 30 mm profile, 700x24,5, XDR body
TIRE	Pirelli Cinturato Gravel M, 700x45, 120 TPI
SHIFTER	Sram Rival AXS E1
REAR DERAILLEUR	Sram GX, T-Type, AXS
FRONT DERAILLEUR	no_code
CRANKSET	Sram Rival XPLR E1, 40T Crank length: 165 mm (XS-SM); 170 mm (MD-LG); 172.5 mm (XL)
BOTTOM BRACKET	Sram Press fit Road Wide 86.5x41
CHAIN	Sram GX, T-Type
CASSETTE / FREEWHEEL	Sram XS-1275, 10-52T, 10-12-14-16-18-21-24-28-32-38-44-52T
BRAKE LEVER	Included in the shifter
BRAKE	Sram Rival, Hydraulic disc brake
FRONT DISK ROTOR	Sram Centerline, Center Lock, 160 mm
REAR DISK ROTOR	Sram Centerline, Center Lock, 160 mm

ARCADEX PRO | GRX 820/822 DISC 1X12SP | YTB85



The image shown is indicative only. Components and graphic detail may differ from actual model. Bianchi reserves the right to amend specifications and/or prices.

COLOR	AF - CK16 / Green water - Matt AW - Forest Green / Graphite - Matt
FRAME	Arcadex PRO Disc Brake Specification: Flat Mount 140/160 Bottom Braket Standard: PressFit 86.5 X Ø41 Rear Axle: thru12 OLD (Over-Locknut-Dimension): 142 mm Front Derailleur: Non Compatible Rear Derailleur: SRAM UDH Hanger type Max Chainring Compatibility: 38T-44T Minimun Chainline: 45.5 mm Tire Clearance: ETRTO 622-50 mm SeatPost O.D: Ø27.2 mm Material: Epoxy - SM Carbon Fiber Composite
HEADSET	Bianchi Custom Acros ICR (Internal Cable Rounting) Spacers:5 mm x1,10 mm x3 Headtube Cover: Bianchi Costum Compresion Ring: 1.125 Inch Top Bearing: Angular contact Bearing 42x52x7 + seal Bottom Bearing: Angular contact Bearing 40x52x7 + seal
FORK	Bianchi Arcadex Fork Disc Brake Specification: Flat Mount 140/160 Front Axle: thru12 OLD (Over-Locknut-Dimension): 100 mm Tire Clearance: ETRTO 622-50 mm Steer tube Diameter: 1 1/8" Material: Epoxy - SM Carbon Fiber Composite
SHIFTER	Shimano GRX 820 ST/BL-RX820
REAR DERAILLEUR	Shimano GRX 822 RD-RX822, SGS Maximum Cassette Sprocket 51T
CRANKSET	Shimano GRX 820 FC-RX820-1,40T Crank Length: 170 mm-XS(47)-SM(51), 172.5 mm-MD(55)-LG(58), 175 mm-XL(61)
BOTTOM BRACKET	Shimano SM-BB72-41B, press fit

CHAIN	Shimano CN-M7100
CASSETTE / FREEWHEEL	Shimano CS-M7100-12 speed, 11-51T Driver body Interface: MicroSpline
BRAKE	Shimano Hydraulic Brake, BR-RX820
DISC ROTOR	Shimano SM-RT70 IceTech Hub Interface: Centerlock Rotor Diameter: 160 mm (front&Rear)
WHEELSET	Velomann Terbium clincher and tubeless ready Rim Diameter: 700C Material: Carbon Rim Height: 30 mm Inner Wigth Channel: 25 mm
TIRE	Pirelli Cinturato™ GRAVEL M Classic, 45-622 tan sidewall
STEM	Velomann AICR Alloy Rise: -2° Steerer Diameter: 1-1/8" (28.6 mm) HB interface Diameter: 1-1/4" (31.8 mm) Stem Lengths: 80 mm-XS(47), 90 mm-SM(51), 100 mm-MD(55), 110 mm-LG(58), 120 m-XL(61)
HANDLEBAR	Velomann Gravel ICR Alloy Flare: 16° | Drop: 130 mm | Reach 70 mm | Interface Diameter: 1 1/4" (31.8 mm) | HandleBar Widths: 400 - SX(47) SM(51), 420 - MD(55) LG(58), 440 -XL(61)
TAPE	Bianchi Hexagon tape 2.5 mm thickness, Full black
SEATPOST	Velomann Carbon UD SeatPost O.D: Ø27.2 mm | Seatpost lengths: 300 mm-SX(47), 350 mm- SM(51) MD(55), 400 mm-LG(58) XL(61)
SADDLE	Velomann MITORA 149 H1 cover: soft touch | padding: foam | shell: nylon carbon rails: Aisi Steel | lenght: 250 mm | width: 149 mm weight: 230g ± 2

ARCADEX COMP | APEX EAGLE D1 12SP | YUB88



The image shown is indicative only. Components and graphic detail may differ from actual model. Bianchi reserves the right to amend specifications and/or prices.

COLORS	AY - CK16 - Graphite [Full Glossy] AZ - Metal Sand - Graphite [Full Glossy]
FRAME	Bianchi Arcadex, Carbon, Flat mount disc, PressFit 86.5x41 mm, Thru axle, OLD: 142 mm, Rear derailleur: Sram UDH hanger type, Tire clearance: ETRTO 622-50 sizes XS-SM-MD-LG-XL
SEATPOST CLAMP	Bianchi Custom
SEATPOST	Velomann Carbon, offset 15 mm, diameter 27.2 mm length: 300 mm (XS); 350 mm (SM-XL)
HEADSET	Acros for internal cable routing
FORK	Bianchi Arcadex, Carbon, flat mount disc frake, thru axle 12x100 mm
STEM	Velomann AL6061, rise -7° Size: 80 mm (XS-SM); 90 mm (MD); 100 mm (LG); 110 mm (XL)
HANDLEBAR	Velomann Gravel, Aluminium, diameter 31.8 mm, reach 70 mm, drop 130 mm, flare 16 deg Size: 400 mm (XS-SM); 420 mm (MD-LG); 440 mm (XL)
GRIP / TAPE	Bianchi Hexagon tape, 2.5 mm thickness, black
SADDLE	Velomann Mitora 149 H2, steel rails, length 250 mm, width 149 mm

WHEELSET	Velomann V24G, Aluminium rim, profile height 24 mm, 700x24c, 24h, Campagnolo body
TIRE	Pirelli Cinturato Gravel M, 700x45, 120 TPI
SHIFTER	Sram Apex AXS, D1
REAR DERAILLEUR	Sram Apex Eagle D1, 12sp
FRONT DERAILLEUR	no_code
CRANKSET	Sram Apex D1 Wide, 40T Crank length: 170 mm (XS-SM); 172.5 mm (MD-LG); 175 mm (XL)
BOTTOM BRACKET	Sram Press fit Road Wide 86.5x41
CHAIN	Sram SX Eagle, 12 sp
CASSETTE / FREEWHEEL	Sram PG-1210 Eagle, for HG body, 11-13-15-17-19-22-25-28-32-36-42-50T
BRAKE LEVER	Included in the shifter
BRAKE	Sram Apex, Hydraulic disc brake
FRONT DISK ROTOR	Sram Centerline, Center Lock, 160 mm
REAR DISK ROTOR	Sram Centerline, Center Lock, 160 mm

ARCADEX COMP | GRX 610 12SP | YUB87



The image shown is indicative only. Components and graphic detail may differ from actual model. Bianchi reserves the right to amend specifications and/or prices.

COLORS	AY - CK16 - Graphite [Full Glossy] AZ - Metal Sand - Graphite [Full Glossy]
FRAME	Bianchi Arcadex, Carbon, Flat mount disc, PressFit 86.5x41 mm, Thru axle, OLD: 142 mm, Rear derailleur: Sram UDH hanger type, Tire clearance: ETRTO 622-50 sizes XS-SM-MD-LG-XL
SEATPOST CLAMP	Bianchi Custom
SEATPOST	Velomann Carbon, offset 15 mm, diameter 27.2 mm length: 300 mm (XS); 350 mm (SM-XL)
HEADSET	Acros for internal cable routing
FORK	Bianchi Arcadex, Carbon, flat mount disc frake, thru axle 12x100 mm
STEM	Velomann AL6061, rise -7° Size: 80 mm (XS-SM); 90 mm (MD); 100 mm (LG); 110 mm (XL)
HANDLEBAR	Velomann Gravel, Aluminium, diameter 31.8 mm, reach 70 mm, drop 130 mm, flare 16 deg Size: 400 mm (XS-SM); 420 mm (MD-LG); 440 mm (XL)
GRIP / TAPE	Bianchi Hexagon tape, 2.5 mm thickness, black
SADDLE	Velomann Mitora 149 H2, steel rails, length 250 mm, width 149 mm

WHEELSET	Velomann V24G, Aluminium rim, profile height 24 mm, 700x24c, 24h, Campagnolo body
TIRE	Pirelli Cinturato Gravel M, 700x45, 120 TPI
SHIFTER	Shimano GRX, shifter lever ST-RX610, caliper BR-RX400
REAR DERAILLEUR	Shimano GRX, RD-RX822, 12sp
FRONT DERAILLEUR	no_code
CRANKSET	Shimano GRX, FC-RX610, 40T Crank length: 170 mm (XS-SM); 172.5 mm (MD-LG); 175 mm (XL)
BOTTOM BRACKET	Shimano SM-BB72-41B, press fit type for road
CHAIN	Shimano 105, CN-M7100
CASSETTE / FREEWHEEL	Shimano SLX, CS-M7100, 10-51T, 10-12-14-16-18-21-24-28-33-39-45-51T
BRAKE LEVER	Included in the shifter
BRAKE	Shimano BR-RX410 Hydraulic disc brake
FRONT DISK ROTOR	Shimano SM-RT70 Center Lock with Ice Tech, 160 mm
REAR DISK ROTOR	Shimano SM-RT70 Center Lock with Ice Tech, 160 mm

NEW

ARCADEX AL | GRX 610 12SP | YVBL3



The image shown is indicative only. Components and graphic detail may differ from actual model. Bianchi reserves the right to amend specifications and/or prices.

COLORS	U9 - Turquoise - CK16 [Full Glossy] UB - Light Green - Forest Green [Full Glossy] UP - Burgundy - Coral Red [Full Glossy]
FRAME	Bianchi Arcadex AL, aluminium, hydroformed tubes, tire clearance 50 mm, T47 Bottom bracket, rack and fender compatibility sizes XS-SM-MD-LG-XL
SEATPOST CLAMP	Bianchi Aluminium, diameter 31.8 mm
SEATPOST	Velomann Aluminium, 27,2 mm, Seatback 0 mm length: 300 mm (XS); 350 mm (SM-LG); 400 mm (XL)
HEADSET	Acros for internal cable routing
FORK	Bianchi Arcadex, Carbon, flat mount disc frake, thru axle 12x100 mm
STEM	Velomann AL6061, rise -7° Size: 70 mm (XS); 80 mm (SM); 90 mm (MD); 100 mm (LG); 110 mm (XL)
HANDLEBAR	Velomann Gravel, Aluminium, diameter 31.8 mm, reach 70 mm, drop 130 mm, flare 16 deg Size: 400 mm (XS-SM); 420 mm (MD-LG); 440 mm (XL)
GRIP / TAPE	Bianchi Hexagon tape, 2.5 mm thickness, black
SADDLE	Selle Royal SRX Open

WHEELSET	Velomann V22G, Rim: Aluminium, 622x24c, 24h
TIRE	Pirelli Cinturato Tanwall, 700x45
SHIFTER	Shimano GRX, shifter lever ST-RX610, caliper BR-RX400
REAR DERAILLEUR	Shimano GRX, RD-RX822, 12sp
FRONT DERAILLEUR	no_code
CRANKSET	Shimano GRX, FC-RX610, 40T Crank length: 165 mm (XS-SM); 170 mm (MD-LG); 172.5 mm (XL)
BOTTOM BRACKET	Token T47, 24 mm axle, 86.5 mm width
CHAIN	Shimano 105, CN-M7100
CASSETTE / FREEWHEEL	Shimano SLX, CS-M7100, 10-51T, 10-12-14-16-18-21-24-28-33-39-45-51T
BRAKE LEVER	Included in the shifter
BRAKE	Shimano BR-RX410 Hydraulic disc brake
FRONT DISK ROTOR	Shimano RT-CL700 Center Lock, 160 mm
REAR DISK ROTOR	Shimano RT-CL700 Center Lock, 160 mm

NEW

VIA NIRONE 7 | GRX600 11SP | YUB62



The image shown is indicative only. Components and graphic detail may differ from actual model. Bianchi reserves the right to amend specifications and/or prices.

COLORS	GE - Yellow [Matt] - Graphite [Glossy] RL - Celeste [Matt] - Graphite [Glossy]
FRAME	Bianchi Via Nirone 7, Aluminium, Flat mount disc, BSA, Thru axle, OLD: 142 mm, Front derailleur: band type, Internal cable routing sizes 47-50-53-55-57-59-61
SEATPOST CLAMP	Bianchi Aluminium, diameter 31.8 mm
SEATPOST	Velomann Aluminium, Diameter 27,2 mm, 15 mm offset length: 300 mm (47-50 cm); 350 mm (53-61 cm)
HEADSET	Acros for internal cable routing
FORK	Bianchi Full Carbon, 1,5", disc brake flat mount, thru axle 12x100 mm
STEM	Velomann AL6061, rise -7° Size: 90 mm (47 cm); 100 mm (50-53 cm); 110 mm (55-57 cm); 120 mm (59-61 cm)
HANDLEBAR	Velomann Gravel, Aluminium, diameter 31.8 mm, reach 70 mm, drop 130 mm, flare 16 deg Size: 400 mm (47-53 cm); 420 mm (55-59 cm); 440 mm (61 cm)
GRIP / TAPE	Bianchi Hexagon tape, 2.5 mm thickness, black
SADDLE	Selle Italia Gnd Full-fit, Rail in carbon steel

WHEELSET	Velomann 622x21, 32 holes; Front hub: Aluminium, Thru axle; Rear hub: Formula RXC-142S
TIRE	Pirelli Cinturato Gravel Adventure M, 40-622, Tubeless ready, 60 TPI
SHIFTER	Shimano GRX, shifter lever ST-RX600, caliper BR-RX400
REAR DERAILLEUR	Shimano GRX, RD-RX812, 11sp
FRONT DERAILLEUR	-
CRANKSET	Shimano GRX, FC-RX600, 40T Crank length: 165 mm (47-50 cm); 170 mm (53-55 cm); 172.5 mm (57-59 cm); 175 mm (61 cm)
BOTTOM BRACKET	Shimano BB-RS501, BSA
CHAIN	KMC X11 EPT
CASSETTE / FREEWHEEL	Sunrace CSMS8, 11-42T
BRAKE LEVER	Included in the shifter
BRAKE	Shimano BR-RX400 Hydraulic disc brake
FRONT DISK ROTOR	Shimano SM-RT26, 160 mm
REAR DISK ROTOR	Shimano SM-RT26, 160 mm

NEW

VIA NIRONE 7 | GRX600 11SP | YUB62



The image shown is indicative only. Components and graphic detail may differ from actual model. Bianchi reserves the right to amend specifications and/or prices.

COLORS	GE - Yellow [Matt] - Graphite [Glossy] RL - Celeste [Matt] - Graphite [Glossy]
FRAME	Bianchi Via Nirone 7, Aluminium, Flat mount disc, BSA, Thru axle, OLD: 142 mm, Front derailleur: band type, Internal cable routing sizes 47-50-53-55-57-59-61
SEATPOST CLAMP	Bianchi Aluminium, diameter 31.8 mm
SEATPOST	Velomann Aluminium, Diameter 27,2 mm, 15 mm offset length: 300 mm (47-50 cm); 350 mm (53-61 cm)
HEADSET	Acros for internal cable routing
FORK	Bianchi Full Carbon, 1,5", disc brake flat mount, thru axle 12x100 mm
STEM	Velomann AL6061, rise -7° Size: 90 mm (47 cm); 100 mm (50-53 cm); 110 mm (55-57 cm); 120 mm (59-61 cm)
HANDLEBAR	Velomann Gravel, Aluminium, diameter 31.8 mm, reach 70 mm, drop 130 mm, flare 16 deg Size: 400 mm (47-53 cm); 420 mm (55-59 cm); 440 mm (61 cm)
GRIP / TAPE	Bianchi Hexagon tape, 2.5 mm thickness, black
SADDLE	Selle Italia Gnd Full-fit, Rail in carbon steel

WHEELSET	Velomann 622x21, 32 holes; Front hub: Aluminium, Thru axle; Rear hub: Formula RXC-142S
TIRE	Pirelli Cinturato Gravel Adventure M, 40-622, Tubeless ready, 60 TPI
SHIFTER	Shimano GRX, shifter lever ST-RX600, caliper BR-RX400
REAR DERAILLEUR	Shimano GRX, RD-RX812, 11sp
FRONT DERAILLEUR	-
CRANKSET	Shimano GRX, FC-RX600, 40T Crank length: 165 mm (47-50 cm); 170 mm (53-55 cm); 172.5 mm (57-59 cm); 175 mm (61 cm)
BOTTOM BRACKET	Shimano BB-RS501, BSA
CHAIN	KMC X11 EPT
CASSETTE / FREEWHEEL	Sunrace CSMS8, 11-42T
BRAKE LEVER	Included in the shifter
BRAKE	Shimano BR-RX400 Hydraulic disc brake
FRONT DISK ROTOR	Shimano SM-RT26, 160 mm
REAR DISK ROTOR	Shimano SM-RT26, 160 mm

NEW

VIA NIRONE 7 | GRX610 12SP | YVBMJ



The image shown is indicative only. Components and graphic detail may differ from actual model. Bianchi reserves the right to amend specifications and/or prices.

COLORS	GE - Yellow [Matt] - Graphite [Glossy] RL - Celeste [Matt] - Graphite [Glossy]
FRAME	Bianchi Via Nirone 7, Aluminium, Flat mount disc, BSA, Thru axle, OLD: 142 mm, Front derailleur: band type, Internal cable routing sizes 47-50-53-55-57-59-61
SEATPOST CLAMP	Bianchi Aluminium, diameter 31.8 mm
SEATPOST	Velomann Aluminium, Diameter 27,2 mm, 15 mm offset length: 300 mm (47-50 cm); 350 mm (53-61 cm)
HEADSET	Acros for internal cable routing
FORK	Bianchi Full Carbon, 1,5", disc brake flat mount, thru axle 12x100 mm
STEM	Velomann Aluminium, Diameter 28.6 mm, Barbore 31.8 mm, angle 0 Size: 80 mm (47-53 cm); 100 mm (55 cm); 120 mm (57-61 cm)
HANDLEBAR	Velomann Gravel, Aluminium, diameter 31.8 mm, reach 70 mm, drop 130 mm, flare 16 deg Size: 400 mm (47-53 cm); 420 mm (55-59 cm); 440 mm (61 cm)
GRIP / TAPE	Bianchi Hexagon tape, 2.5 mm thickness, black
SADDLE	Selle Italia Gnd Full-fit, Rail in carbon steel

WHEELSET	Velomann 622x21, 32 holes; Front hub: Aluminium, Thru axle; Rear hub: Shimano FH-TC500
TIRE	Pirelli Cinturato Gravel Adventure M, 40-622, Tubeless ready, 60 TPI
SHIFTER	Shimano GRX, shifter lever ST-RX610, caliper BR-RX400
REAR DERAILLEUR	Shimano GRX, RD-RX822, 12sp
FRONT DERAILLEUR	-
CRANKSET	Shimano GRX, FC-RX610, 40T Crank length: 165 mm (47-50 cm); 170 mm (53-55 cm); 172.5 mm (57-59 cm); 175 mm (61 cm)
BOTTOM BRACKET	Shimano BB-RS501, BSA
CHAIN	Shimano 105, CN-M7100
CASSETTE / FREEWHEEL	Shimano SLX, CS-M7100, 10-45T, 10-12-14-16-18-21-24-28-32-36-40-45T
BRAKE LEVER	Included in the shifter
BRAKE	Shimano BR-RX400 Hydraulic disc brake
FRONT DISK ROTOR	Shimano SM-RT10, 160 mm
REAR DISK ROTOR	Shimano SM-RT10, 160 mm

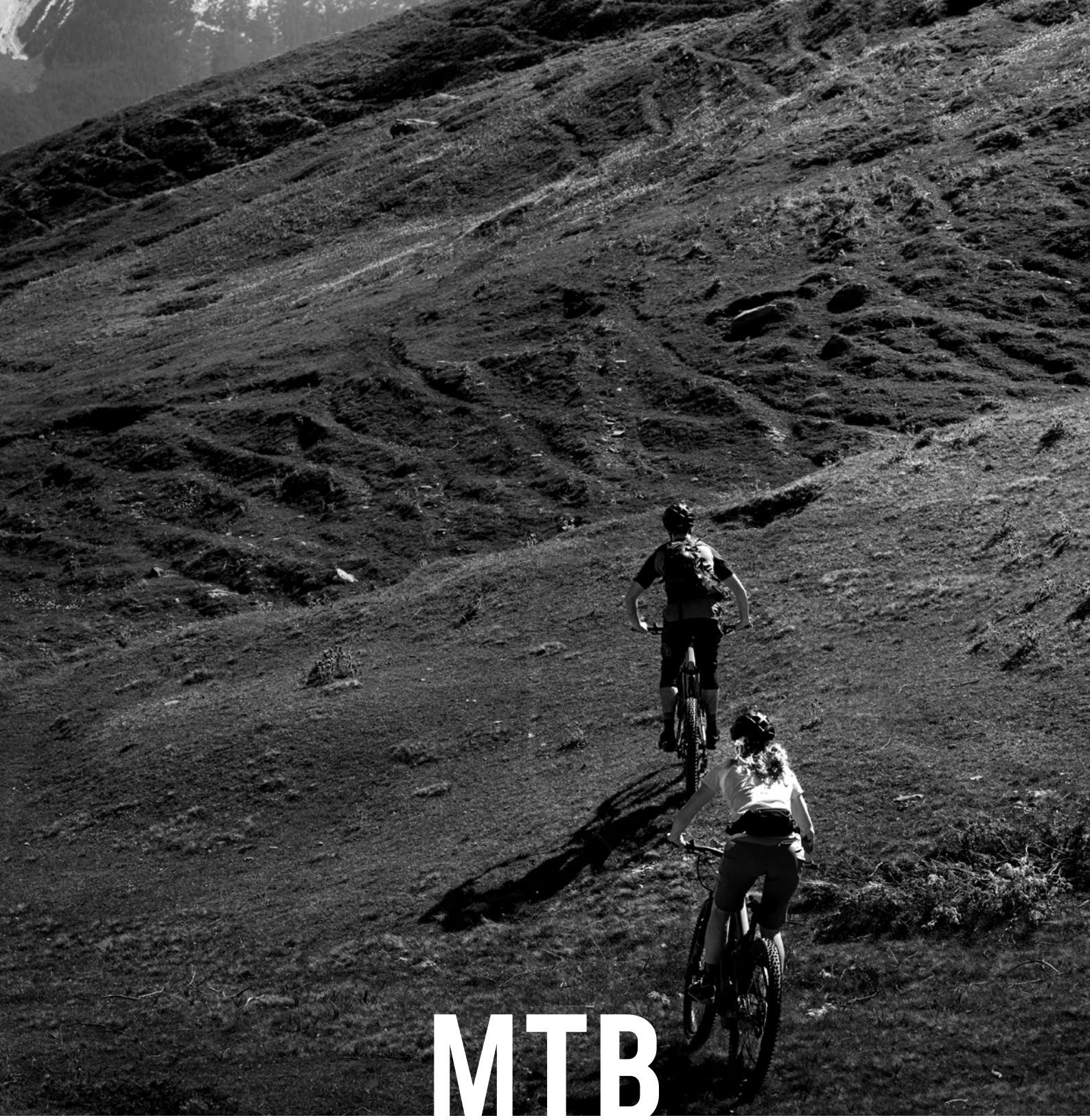

MTB

NITRON 9.2 | SHIMANO XT/SLX 1X12SP | YSBP4



The image shown is indicative only. Components and graphic detail may differ from actual model. Bianchi reserves the right to amend specifications and/or prices.

COLOR	NH: CK16 / Black Full Glossy NF: White/Black full glossy
FRAME	Nitron 29" full carbon monocoque, 1.5" tapered HT, BB92, seatpost diam.27,2mm, high direct mount, PM 160mm carbon dropout 12x148mm BOOST Thru axle, internal cable routing, sizes 15-17-19-21" Size: 38-43- 48-53
BOLTS / HARDWARE	Stainless bolts for waterbottle bosses (15">2pcs, 17,19,21">4pcs)
SEATPOST CLAMP	Promax MX-112C diam.31,8mm
HEADSET	FSA Orbit C-40, NO.42/ACB-A, Anod.Black 1 1/8-1.5 w/ H2001 4.3mm w/FSA logo, NO.42/ACB-A
FORK	Rock Shox SID SL 29", damper Rush RL, Debon Air 100mm w/Tall oneLoc remote left, 1.5 alu HT, 15X110mm Maxle Stealth, 32mm stanchions, magnesium lowers, PM 160mm disc mount, 44mm offset
SHIFTER	Shimano SLX 1x12 I-spec EV, w/o Optical Gear Display, w/2050mm inner
REAR DERAILLEUR	Shimano XT Shadow + Design 12s, RD-M8100-SGS top normal, direct attachment, for 10-51T max
CRANKSET	Shimano XT, 32T, arms lenghts: 170mm-15", 175mm-17/19/21", 52mm CHAINLINE
BOTTOM BRACKET	Shimano Pressfit 41x92mm BB-MT800-PA

CHAIN	Shimano CN-M7100, 12sp, 120 link
CASSETTE / FREEWHEEL	Shimano CS-M7100-12, 12sp, 10-51T
BRAKE	Shimano M6100 w/rear J-Kit only, resin pad, w/SM-MA-F180P/P2 adapter only for front
DISC ROTOR	Shimano SM-RT54 CL 180mm front & 160mm rear, CenterLock
RIM/WHEELSET	Velomann KOM light i25, 29" Rim, 32 hole Pre Anodized Black PV Vinylx6 pcs, 622x25
TIRE	Kenda Booster Pro - 29x2.20, Tubeless Race compound, Tubeless race, 120Tpi, folding, ETRTO 56-622
STEM	Velomann +/-7°, 1,1/8 x diam.31.8mm, size: 70mm-15", 80mm-17", 90mm-19/21"
HANDLEBAR	Velomann Flat top, width 720mm, diam.31,8mm, 9° backsweep, DB Alloy 6061-T6
GRIP / TAPE	T-One Rock T-GP34 single lock grip , TPR, plastic inner body, aluminium clamp
SEATPOST	Velomann, lenght: 350mm-15", 400mm- 17/19/21", diam.27.2mm, 0mm seatback
SADDLE	Velomann, manganese rail, lenght 277mm x width 144mm

NITRON 9 .3 | SHIMANO XT/SLX 1X12SP | YR/YSBP5



The image shown is indicative only. Components and graphic detail may differ from actual model. Bianchi reserves the right to amend specifications and/or prices.

COLOR	NH: CK16 / Black Full Glossy NF: White/Black full glossy
FRAME	Nitron 9.3, 29" full carbon monocoque, 1.5" tapered HT, BB92, seatpost diam.27,2mm, high direct mount, PM 160mm carbon dropout 12x148mm BOOST Thru axle, internal cable routing, sizes 15-17-19-21" Size: 38-43- 48-53
BOLTS / HARDWARE	Stainless bolts for waterbottle bosses (15">2pcs, 17,19,21">4pcs)
SEATPOST CLAMP	Promax MX-112C diam.31,8mm, elegant, stylish, light & strong seat clamp w/angled cut for carbon frames
HEADSET	FSA Orbit C-40, NO.42/ACB-A, Anod.Black 1 1/8-1.5 w/ H2001 4.3mm w/FSA logo, NO.42/ACB-A
FORK	Rock Shox Judy Gold RL 29" Solo Air 100mm w/Tall oneLoc remote left, 1.5 Tapered HT, 15x110mm BOOST Maxle stealth, 30mm stanchions, magnesium lowers, PM 160mm disc mount, 51mm offset
SHIFTER	Shimano SLX 1x12 I-spec EV, w/o Optical Gear Display, w/2050mm inner
REAR DERAILLEUR	Shimano XT Shadow + Design 12sp, RD-M8100-SGS top normal, direct attachment, for 10-51T max
CRANKSET	Shimano, 32T, arms lenghts: 170mm-15", 175mm-17/19/21", 52mm CHAINLINE
BOTTOM BRACKET	Shimano Pressfit 41x92mm

CHAIN	Shimano 12sp, 120 link
CASSETTE / FREEWHEEL	Shimano, 12sp, 10-51T
BRAKE	Shimano M4100 w/rear J-Kit only, w/SM-MA- F180P/P2 adapter only for front
DISC ROTOR	Shimano SM-RT10 CL 180mm front & 160mm rear
RIM/WHEELSET	Velomann KOM light i25 29" Rim, 32 hole Pre Anodized Black PV Vinylx6 pcs, 622x25
TIRE	Kenda Booster Pro - 29x2.20, Tubeless Race compound, Tubeless race, 120Tpi, folding, ETRTO 56-622
STEM	Velomann +/-7°, 1,1/8 x diam.31.8mm, size: 70mm-15", 80mm-17", 90mm-19/21"
HANDLEBAR	Velomann Flat top, width 720mm, diam.31,8mm, 9° backsweep, DB Alloy 6061-T6
GRIP / TAPE	T-One Rock T-GP34 single lock grip , TPR, plastic inner body, aluminium clamp
SEATPOST	Velomann, lenght: 350mm-15", 400mm- 17/19/21", diam.27.2mm, 0mm seatback
SADDLE	Velomann, manganese rail, lenght 277mm x width 144mm

NITRON 9.4 | SHIMANO XT/DEORE 1X12 | YR/YSB07



The image shown is indicative only. Components and graphic detail may differ from actual model. Bianchi reserves the right to amend specifications and/or prices.

COLOR	NH - CK16 / Black Full Glossy NF - White/Black full glossy"
FRAME	Nitron 9.4, 29" full carbon monocoque, 1.5" tapered HT, BB92, seatpost diam.27,2mm, high direct mount, PM 160mm carbon dropout 12x148mm BOOST Thru axle, internal cable routing, sizes 15-17-19-21" Size: 38-43- 48-53
BOLTS / HARDWARE	Stainless bolts for waterbottle bosses (15">2pcs, 17,19,21">4pcs)
SEATPOST CLAMP	Promax MX-112C diam.31,8mm, elegant, stylish, light & strong seat clamp w/angled cut for carbon frames
HEADSET	FSA Orbit C-40, NO.42/ACB-A, Anod.Black 1 1/8-1.5 w/ H2001 4.3mm w/FSA logo, NO.42/ACB-A
FORK	Rock Shox Judy Silver TK 29" Solo Air 100mm w/ Poploc remote left, 1.5 Tapered HT, 15x110mm BOOST Maxle stealth, 30mm stanchions, magnesium lowers, PM 160mm disc mount, 51mm offset
SHIFTER	Shimano Deore 1x12sp, clamp band
REAR DERAILLEUR	Shimano XT 12sp, for 10-51T max
CRANKSET	Shimano, 32T, arms lenghts: 170mm-15", 175mm-17/19/21", 52mm CHAINLINE
BOTTOM BRACKET	Shimano Pressfit 41x92mm

CHAIN	Shimano, 12sp, 120 link
CASSETTE / FREEWHEEL	Shimano, 12sp, 10-51T
BRAKE	Shimano MT200 w/rear J-Kit only, Shimano logo, resin pad, w/SM-MA-F180P/P2 adapter only for front
DISC ROTOR	Shimano SM-RT10 CL 180mm front & 160mm rear, CenterLock
RIM/WHEELSET	Velomann KOM light i25 29" Rim, 32 hole Pre Anodized Black PV Vinylx6 pcs, 622x25
TIRE	Kenda Booster Pro - 29x2.20, Tubeless Race compound, Tubeless race, 120Tpi, folding, ETRTO 56-622
STEM	Velomann +/-7°, 1,1/8 x diam.31.8mm, size: 70mm-15", 80mm-17", 90mm-19/21"
HANDLEBAR	Velomann Flat top, width 720mm, diam.31,8mm, 9° backsweep, DB Alloy 6061-T6
GRIP / TAPE	T-One Rock T-GP34 single lock grip , TPR, plastic inner body, aluminium clamp
SEATPOST	Velomann, lenght: 350mm-15", 400mm-17/19/21", diam.27.2mm, 0mm seatback
SADDLE	Velomann, manganese rail, lenght 277mm x width 144mm

NEW

MAGMA 29S | CUES 9SP | YTBC8



The image shown is indicative only. Components and graphic detail may differ from actual model. Bianchi reserves the right to amend specifications and/or prices.

COLORS	P4 - CK16 - Silver [Glossy] PE - Dark grey - Silver [Glossy] PF - Blue - Silver [Glossy]"
FRAME	Bianchi Magma 29, aluminium, OLD 9x135 QR, post mount sizes 43-48-53
REAR SHOCK	-
FORK	Suntour XCM32-NLO 29", 9x100 QR, 100 mm travel
HEADSET	FSA N.10 for external cable routiung
STEM	Velomann ST92A
HANDLEBAR	Velomann MTB479A, Width: 720 mm, Barebore: 31.8 mm, Rise: 15 mm
GRIP / TAPE	T-One T-GP48B 130 mm
SEAT CLAMP	339QX, 31.8 mm
SEATPOST	Velomann SP-7019, Diameter 27.2 mm, 350 mm

SADDLE	Selle Royal SRX
WHEELSET	Mach1 6KLIXX 29, 622-32, 32 holes
TIRE	Kenda Booster 30 TPI, 29x2,2"
SHIFTER	Shimano CUES SL-U4000, 9sp
REAR DERAILLEUR	Shimano CUES RD-U4020, 9sp
CRANKSET	Shimano FC-U4000, 36x22T
CHAIN	Shimano CN-LG500, 10sp
CASSETTE / FREEWHEEL	Shimano CS-LG300, 9sp, 11-13-15-17-20-23-26-30-36T
BRAKE LEVER	Shimano BL-MT200
BRAKE	Shimano MT-200, 2 pistons, mineral oil
FRONT DISK ROTOR	Shimano SM-RT10, 160 mm
REAR DISK ROTOR	Shimano SM-RT10, 160 mm

NEW

MAGMA 29S | CUES 9SP | YTBC8



The image shown is indicative only. Components and graphic detail may differ from actual model. Bianchi reserves the right to amend specifications and/or prices.

COLORS	P4 - CK16 - Silver [Glossy] PE - Dark grey - Silver [Glossy] PF - Blue - Silver [Glossy]"
FRAME	Bianchi Magma 29, aluminium, OLD 9x135 QR, post mount sizes 43-48-53
REAR SHOCK	-
FORK	Suntour XCM32-NLO 29", 9x100 QR, 100 mm travel
HEADSET	FSA N.10 for external cable routiung
STEM	Velomann ST92A
HANDLEBAR	Velomann MTB479A, Width: 720 mm, Barebore: 31.8 mm, Rise: 15 mm
GRIP / TAPE	T-One T-GP48B 130 mm
SEAT CLAMP	339QX, 31.8 mm
SEATPOST	Velomann SP-7019, Diameter 27.2 mm, 350 mm

SADDLE	Selle Royal SRX
WHEELSET	Mach1 6KLIXX 29, 622-32, 32 holes
TIRE	Kenda Booster 30 TPI, 29x2,2"
SHIFTER	Shimano CUES SL-U4000, 9sp
REAR DERAILLEUR	Shimano CUES RD-U4020, 9sp
CRANKSET	Shimano FC-U4000, 36x22T
CHAIN	Shimano CN-LG500, 10sp
CASSETTE / FREEWHEEL	Shimano CS-LG300, 9sp, 11-13-15-17-20-23-26-30-36T
BRAKE LEVER	Shimano BL-MT200
BRAKE	Shimano MT-200, 2 pistons, mineral oil
FRONT DISK ROTOR	Shimano SM-RT10, 160 mm
REAR DISK ROTOR	Shimano SM-RT10, 160 mm

NEW

MAGMA 29S | CUES 9SP | YTBC8



The image shown is indicative only. Components and graphic detail may differ from actual model. Bianchi reserves the right to amend specifications and/or prices.

COLORS	P4 - CK16 - Silver [Glossy] PE - Dark grey - Silver [Glossy] PF - Blue - Silver [Glossy]"
FRAME	Bianchi Magma 29, aluminium, OLD 9x135 QR, post mount sizes 43-48-53
REAR SHOCK	-
FORK	Suntour XCM32-NLO 29", 9x100 QR, 100 mm travel
HEADSET	FSA N.10 for external cable routiung
STEM	Velomann ST92A
HANDLEBAR	Velomann MTB479A, Width: 720 mm, Barebore: 31.8 mm, Rise: 15 mm
GRIP / TAPE	T-One T-GP48B 130 mm
SEAT CLAMP	339QX, 31.8 mm
SEATPOST	Velomann SP-7019, Diameter 27.2 mm, 350 mm

SADDLE	Selle Royal SRX
WHEELSET	Mach1 6KLIXX 29, 622-32, 32 holes
TIRE	Kenda Booster 30 TPI, 29x2,2"
SHIFTER	Shimano CUES SL-U4000, 9sp
REAR DERAILLEUR	Shimano CUES RD-U4020, 9sp
CRANKSET	Shimano FC-U4000, 36x22T
CHAIN	Shimano CN-LG500, 10sp
CASSETTE / FREEWHEEL	Shimano CS-LG300, 9sp, 11-13-15-17-20-23-26-30-36T
BRAKE LEVER	Shimano BL-MT200
BRAKE	Shimano MT-200, 2 pistons, mineral oil
FRONT DISK ROTOR	Shimano SM-RT10, 160 mm
REAR DISK ROTOR	Shimano SM-RT10, 160 mm



ACTIVE

NEW

SPILLO TOURER | CUES 10SP | YTBH3



The image shown is indicative only. Components and graphic detail may differ from actual model. Bianchi reserves the right to amend specifications and/or prices.

COLORS	IH - CK16 [Matt] - Graphite [Glossy] IK - Grey [Matt] - Graphite [Glossy] IL - Graphite [Matt] - Graphite [Glossy]
FRAME	Bianchi Spillo Tourer 28, aluminium, OLD 9x135 QR, post mount sizes SM-MD
FORK	Suntour NEX-HLO 28", 9x100 QR, 63 mm travel
HEADSET	FSA No.8B - ZS-4D
STEM	Velomann UP3+ adjustable 0°-90°, lenght 70 mm
HANDLEBAR	Velomann MTB10A, width: 660 mm, barbore: 31.8 mm, backsweep: 12°
GRIP / TAPE	Herrmans Oxy 130 mm
SEAT CLAMP	Bianchi Aluminium, diameter 31.8 mm
SEATPOST	Velomann Aluminium, Diameter 27,2 mm, 15 mm offset length: 350 mm
SADDLE	Velomann 2087HRN
WHEELSET	Velomann Aluminium rim, 622x21c, dynamo hub

TIRE	Kenda KWIC JOUR 700x38
SHIFTER	Shimano CUES SL-U6000-10R
REAR DERAILLEUR	Shimano CUES RD-U6020, 10sp
CRANKSET	Shimano FC-U6000, 46x30T Crank length: 170 mm
CHAIN	Shimano CN-LG500, 10sp
CASSETTE / FREEWHEEL	Shimano CS-LG300, 10sp, 11-13-15-17-20-23-26-30-34-39T
BRAKE LEVER	Shimano BL-MT200
BRAKE	Shimano MT-200, 2 pistons, mineral oil
FRONT DISK ROTOR	Shimano SM-RT10, 160 mm
REAR DISK ROTOR	Shimano SM-RT10, 160 mm
PEDALS	SP-877 with reflector
FRONT LIGHT	Buchel UNI LED 15lux, dynamo
REAR LIGHT	Spanninga Dynano rear light
KICKSTAND	Ursus Wave, dropout mount
MUDGUARDS	SKS A46R

NEW

SPILLO TOURER | CUES 10SP | YTBH3



The image shown is indicative only. Components and graphic detail may differ from actual model. Bianchi reserves the right to amend specifications and/or prices.

COLORS	IH - CK16 [Matt] - Graphite [Glossy] IK - Grey [Matt] - Graphite [Glossy] IL - Graphite [Matt] - Graphite [Glossy]
FRAME	Bianchi Spillo Tourer 28, aluminium, OLD 9x135 QR, post mount sizes SM-MD
FORK	Suntour NEX-HLO 28", 9x100 QR, 63 mm travel
HEADSET	FSA No.8B - ZS-4D
STEM	Velomann UP3+ adjustable 0°-90°, lenght 70 mm
HANDLEBAR	Velomann MTB10A, width: 660 mm, barbore: 31.8 mm, backsweep: 12°
GRIP / TAPE	Herrmans Oxy 130 mm
SEAT CLAMP	Bianchi Aluminium, diameter 31.8 mm
SEATPOST	Velomann Aluminium, Diameter 27,2 mm, 15 mm offset length: 350 mm
SADDLE	Velomann 2087HRN
WHEELSET	Velomann Aluminium rim, 622x21c, dynamo hub

TIRE	Kenda KWIC JOUR 700x38
SHIFTER	Shimano CUES SL-U6000-10R
REAR DERAILLEUR	Shimano CUES RD-U6020, 10sp
CRANKSET	Shimano FC-U6000, 46x30T Crank length: 170 mm
CHAIN	Shimano CN-LG500, 10sp
CASSETTE / FREEWHEEL	Shimano CS-LG300, 10sp, 11-13-15-17-20-23-26-30-34-39T
BRAKE LEVER	Shimano BL-MT200
BRAKE	Shimano MT-200, 2 pistons, mineral oil
FRONT DISK ROTOR	Shimano SM-RT10, 160 mm
REAR DISK ROTOR	Shimano SM-RT10, 160 mm
PEDALS	SP-877 with reflector
FRONT LIGHT	Buchel UNI LED 15lux, dynamo
REAR LIGHT	Spanninga Dynano rear light
KICKSTAND	Ursus Wave, dropout mount
MUDGUARDS	SKS A46R

NEW

SPILLO TOURER | CUES 10SP | YTBH3



The image shown is indicative only. Components and graphic detail may differ from actual model. Bianchi reserves the right to amend specifications and/or prices.

COLORS	IH - CK16 [Matt] - Graphite [Glossy] IK - Grey [Matt] - Graphite [Glossy] IL - Graphite [Matt] - Graphite [Glossy]
FRAME	Bianchi Spillo Tourer 28, aluminium, OLD 9x135 QR, post mount sizes SM-MD
FORK	Suntour NEX-HLO 28", 9x100 QR, 63 mm travel
HEADSET	FSA No.8B - ZS-4D
STEM	Velomann UP3+ adjustable 0°-90°, lenght 70 mm
HANDLEBAR	Velomann MTB10A, width: 660 mm, barbore: 31.8 mm, backsweep: 12°
GRIP / TAPE	Herrmans Oxy 130 mm
SEAT CLAMP	Bianchi Aluminium, diameter 31.8 mm
SEATPOST	Velomann Aluminium, Diameter 27,2 mm, 15 mm offset length: 350 mm
SADDLE	Velomann 2087HRN
WHEELSET	Velomann Aluminium rim, 622x21c, dynamo hub

TIRE	Kenda KWIC JOUR 700x38
SHIFTER	Shimano CUES SL-U6000-10R
REAR DERAILLEUR	Shimano CUES RD-U6020, 10sp
CRANKSET	Shimano FC-U6000, 46x30T Crank length: 170 mm
CHAIN	Shimano CN-LG500, 10sp
CASSETTE / FREEWHEEL	Shimano CS-LG300, 10sp, 11-13-15-17-20-23-26-30-34-39T
BRAKE LEVER	Shimano BL-MT200
BRAKE	Shimano MT-200, 2 pistons, mineral oil
FRONT DISK ROTOR	Shimano SM-RT10, 160 mm
REAR DISK ROTOR	Shimano SM-RT10, 160 mm
PEDALS	SP-877 with reflector
FRONT LIGHT	Buchel UNI LED 15lux, dynamo
REAR LIGHT	Spanninga Dynano rear light
KICKSTAND	Ursus Wave, dropout mount
MUDGUARDS	SKS A46R

NEW

SPILLO TOURER STEPTHROUGH | CUES 10SP | YTBH4



The image shown is indicative only. Components and graphic detail may differ from actual model. Bianchi reserves the right to amend specifications and/or prices.

COLORS	IH - CK16 [Matt] - Graphite [Glossy] IK - Grey [Matt] - Graphite [Glossy] IL - Graphite [Matt] - Graphite [Glossy]
FRAME	Bianchi Spillo Tourer 28 Step-thru, aluminium, OLD 9x135 QR, post mount sizes XS
FORK	Suntour NEX-HLO 28", 9x100 QR, 63 mm travel
HEADSET	FSA No.8B - ZS-4D
STEM	Velomann UP3+ adjustable 0°-90°, lenght 70 mm
HANDLEBAR	Velomann MTB10A, width: 660 mm, barbore: 31.8 mm, backsweep: 12°
GRIP / TAPE	Herrmans Oxy 130 mm
SEAT CLAMP	Bianchi Aluminium, diameter 31.8 mm
SEATPOST	Velomann Aluminium, Diameter 27,2 mm, 15 mm offset length: 350 mm
SADDLE	Velomann 2087HRN
WHEELSET	Velomann Aluminium rim, 622x21c, dynamo hub

TIRE	Kenda KWIC JOUR 700x38
SHIFTER	Shimano CUES SL-U6000-10R
REAR DERAILLEUR	Shimano CUES RD-U6020, 10sp
CRANKSET	Shimano FC-U6000, 46x30T Crank length: 170 mm
CHAIN	Shimano CN-LG500, 10sp
CASSETTE / FREEWHEEL	Shimano CS-LG300, 10sp, 11-13-15-17-20-23-26-30-34-39T
BRAKE LEVER	Shimano BL-MT200
BRAKE	Shimano MT-200, 2 pistons, mineral oil
FRONT DISK ROTOR	Shimano SM-RT10, 160 mm
REAR DISK ROTOR	Shimano SM-RT10, 160 mm
PEDALS	SP-877 with reflector
FRONT LIGHT	Buchel UNI LED 15lux, dynamo
REAR LIGHT	Spanninga Dynano rear light
KICKSTAND	Ursus Wave, dropout mount
MUDGUARDS	SKS A46R

NEW

SPILLO TOURER STEPTHROUGH | CUES 10SP | YTBH4



The image shown is indicative only. Components and graphic detail may differ from actual model. Bianchi reserves the right to amend specifications and/or prices.

COLORS	IH - CK16 [Matt] - Graphite [Glossy] IK - Grey [Matt] - Graphite [Glossy] IL - Graphite [Matt] - Graphite [Glossy]
FRAME	Bianchi Spillo Tourer 28 Step-thru, aluminium, OLD 9x135 QR, post mount sizes XS
FORK	Suntour NEX-HLO 28", 9x100 QR, 63 mm travel
HEADSET	FSA No.8B - ZS-4D
STEM	Velomann UP3+ adjustable 0°-90°, lenght 70 mm
HANDLEBAR	Velomann MTB10A, width: 660 mm, barbore: 31.8 mm, backsweep: 12°
GRIP / TAPE	Herrmans Oxy 130 mm
SEAT CLAMP	Bianchi Aluminium, diameter 31.8 mm
SEATPOST	Velomann Aluminium, Diameter 27,2 mm, 15 mm offset length: 350 mm
SADDLE	Velomann 2087HRN
WHEELSET	Velomann Aluminium rim, 622x21c, dynamo hub

TIRE	Kenda KWIC JOUR 700x38
SHIFTER	Shimano CUES SL-U6000-10R
REAR DERAILLEUR	Shimano CUES RD-U6020, 10sp
CRANKSET	Shimano FC-U6000, 46x30T Crank length: 170 mm
CHAIN	Shimano CN-LG500, 10sp
CASSETTE / FREEWHEEL	Shimano CS-LG300, 10sp, 11-13-15-17-20-23-26-30-34-39T
BRAKE LEVER	Shimano BL-MT200
BRAKE	Shimano MT-200, 2 pistons, mineral oil
FRONT DISK ROTOR	Shimano SM-RT10, 160 mm
REAR DISK ROTOR	Shimano SM-RT10, 160 mm
PEDALS	SP-877 with reflector
FRONT LIGHT	Buchel UNI LED 15lux, dynamo
REAR LIGHT	Spanninga Dynano rear light
KICKSTAND	Ursus Wave, dropout mount
MUDGUARDS	SKS A46R

NEW

SPILLO TOURER STEPTHROUGH | CUES 10SP | YTBH4



The image shown is indicative only. Components and graphic detail may differ from actual model. Bianchi reserves the right to amend specifications and/or prices.

COLORS	IH - CK16 [Matt] - Graphite [Glossy] IK - Grey [Matt] - Graphite [Glossy] IL - Graphite [Matt] - Graphite [Glossy]
FRAME	Bianchi Spillo Tourer 28 Step-thru, aluminium, OLD 9x135 QR, post mount sizes XS
FORK	Suntour NEX-HLO 28", 9x100 QR, 63 mm travel
HEADSET	FSA No.8B - ZS-4D
STEM	Velomann UP3+ adjustable 0°-90°, lenght 70 mm
HANDLEBAR	Velomann MTB10A, width: 660 mm, barbore: 31.8 mm, backsweep: 12°
GRIP / TAPE	Herrmans Oxy 130 mm
SEAT CLAMP	Bianchi Aluminium, diameter 31.8 mm
SEATPOST	Velomann Aluminium, Diameter 27,2 mm, 15 mm offset length: 350 mm
SADDLE	Velomann 2087HRN
WHEELSET	Velomann Aluminium rim, 622x21c, dynamo hub

TIRE	Kenda KWIC JOUR 700x38
SHIFTER	Shimano CUES SL-U6000-10R
REAR DERAILLEUR	Shimano CUES RD-U6020, 10sp
CRANKSET	Shimano FC-U6000, 46x30T Crank length: 170 mm
CHAIN	Shimano CN-LG500, 10sp
CASSETTE / FREEWHEEL	Shimano CS-LG300, 10sp, 11-13-15-17-20-23-26-30-34-39T
BRAKE LEVER	Shimano BL-MT200
BRAKE	Shimano MT-200, 2 pistons, mineral oil
FRONT DISK ROTOR	Shimano SM-RT10, 160 mm
REAR DISK ROTOR	Shimano SM-RT10, 160 mm
PEDALS	SP-877 with reflector
FRONT LIGHT	Buchel UNI LED 15lux, dynamo
REAR LIGHT	Spanninga Dynano rear light
KICKSTAND	Ursus Wave, dropout mount
MUDGUARDS	SKS A46R

SPILLO DELUXE | TOURNEY 21SP | Y U B5L



The image shown is indicative only. Components and graphic detail may differ from actual model. Bianchi reserves the right to amend specifications and/or prices.

COLOR	LK: Celeste Vintage
FRAME	Spillo Rubino Deluxe 28"Rigid Alloy 6061 1.1/8" size: 47-55, O.L.D.135mm
SEATPOST CLAMP	Alloy Silver Dia:31.8mm Quick-Release, Silver
HEADSET	1.1/8"X26T Steel Silver
FORK	28"Road 1.1/8"
SHIFTER	Shimano 7-Speed Ez-Fire plus, 2F-alloy, for V- Brake, black, Index Wire/2050mm Left Shifter 3-Speed Ez-Fire plus, 2F-alloy, for V-Brake, black, Index Wire/1800mm
REAR DERAILLEUR	Shimano, RD-TY500, Tourney, 6/7-speed, diretc attachement type, w/wheel type cable guide, bulk
FRONT DERAILLEUR	Shimano, FD-TY510-TS3, Tourney, top-swing, dual-pull, for rear 6/7speed, band type (w/31.8mm adapter), CS angle:63-66 for 48T.CL:47.5/50mm
CRANKSET	Crankset TCXE6-VZ(A4P6) 48X38X28 black/steel silver/steel silver
BOTTOM BRACKET	CH 52-68 diagonal cotterless/bolt L:127mm 4pcs w/ bolt ENM
CHAIN	KMC Z51 1/2"x 3/32" 7-speed
CASSETTE / FREEWHEEL	Shimano AMFTZ5007428 7-speed 14-28 w/thread
BRAKE	V-brake set HJ- 621ADX-SV silver Al. L:103mm 90/2 pipes ENM w/ ID 5mm Pipe cap

BRAKE LEVER	included in the shifter
FRONT HUB	KT-A15F Alloy silver 36H, silver QR, MQSP141NSI A:109-B:126-C:149 M9X100X108
REAR HUB	KT-A1ER Alloy Lathing natural/36H /quick- release 135X145 Threaded FW:40,5mm
RIM/WHEELSET	28/622X19 Freeway D-Wall Al balck 36H D:6.5 HBP
TIRE	700X35C 37-622 C-1880 Xpedium
STEM	MTS-C299N-5 (C297) Adjustable Alloy High polished Silver E:90 DIA:25.4 L:180mm
HANDLEBAR	HL-NR-AL-16 High polished an. Silver alloy W:590 R:26 DIA:25.4 BS:33 DG silver
SEATPOST	SP-242 Alloy silver L:350mm DIA:27.2mm
SADDLE	Selle Royal RIO renna Brown (8073), RVS, silver steel rail, w/clamp
PEDALS	body/PP-Black 2#, 9/16" Boron, BS Ball-Type EN
FRONT LIGHT	Spanninga JOS Illico
REAR LIGHT	SPARK RED
KICKSTAND	CD-122 Alloy, 20"-28" adjustable, Silver/esge black allen bolt dacromet
MUDGUARD / STAY	28" RAPIDO BIA2822-00177 46mm Silver foil,1Nose rear mudflap aid sliding bridge zinc coated

SPILLO DELUXE | TOURNEY 21SP | YUB5M



The image shown is indicative only. Components and graphic detail may differ from actual model. Bianchi reserves the right to amend specifications and/or prices.

COLOR	LK: Celeste Vintage
FRAME	Spillo Rubino Deluxe 28"Rigid Step Through Alloy 6061 1.1/8" size 43-47-51, O.L.D.135mm
SEATPOST CLAMP	Alloy Silver Dia:31.8mm Quick-Release, Silver
HEADSET	1.1/8"X26T Steel Silver
FORK	28"Road 1.1/8"
SHIFTER	Shimano 7-Speed Ez-Fire plus, 2F-alloy, for V- Brake, black, Index Wire/2050mm Left Shifter 3-Speed Ez-Fire plus, 2F-alloy, for V-Brake, black, Index Wire/1800mm
REAR DERAILLEUR	Shimano, RD-TY500, Tourney, 6/7-speed, diretc attachement type, w/wheel type cable guide, bulk
FRONT DERAILLEUR	Shimano, FD-TY510-TS3, Tourney, top-swing, dual-pull, for rear 6/7speed, band type (w/31.8mm adapter), CS angle:63-66 for 48T.CL:47.5/50mm
CRANKSET	Crankset TCXE6-VZ(A4P6) 48X38X28 black/steel silver/steel silver
BOTTOM BRACKET	CH 52-68 diagonal cotterless/bolt L:127mm 4pcs w/bolt ENM
CHAIN	KMC Z51 1/2"x 3/32" 7-speed
CASSETTE / FREEWHEEL	Shimano AMFTZ5007428 7-speed 14-28 w/thread
BRAKE	V-brake set HJ- 621ADX-SV silver Al. L:103mm 90/2 pipes ENM w/ ID 5mm Pipe cap

BRAKE LEVER	included in the shifter
FRONT HUB	KT-A15F Alloy silver 36H, silver QR, MQSP141NSI A:109-B:126-C:149 M9X100X108
REAR HUB	KT-A1ER Alloy Lathing natural/36H /quick- release 135X145 Threaded FW:40,5mm
RIM/WHEELSET	28/622X19 Freeway D-Wall Al balck 36H D:6.5 HBP
TIRE	700X35C 37-622 C-1880 Xpedium
STEM	MTS-C299N-5 (C297) Adjustable Alloy High polished Silver E:90 DIA:25.4 L:180mm
HANDLEBAR	HL-NR-AL-16 High polished an. Silver alloy W:590 R:26 DIA:25.4 BS:33 DG silver
SEATPOST	SP-242 Alloy silver L:350mm DIA:27.2mm
SADDLE	Selle Royal RIO renna Brown (8073), RVS, silver steel rail, w/clamp
PEDALS	body/PP-Black 2#, 9/16" Boron, BS Ball-Type EN
FRONT LIGHT	Spanninga JOS Illico
REAR LIGHT	SPARK RED
KICKSTAND	CD-122 Alloy, 20"-28" adjustable, Silver/esge black allen bolt dacromet
MUDGUARD / STAY	28" RAPIDO BIA2822-00177 46mm Silver foil,1Nose rear mudflap aid sliding bridge zinc coated

NEW

XR24 | TOURNEY 8SP | YTB7R



The image shown is indicative only. Components and graphic detail may differ from actual model. Bianchi reserves the right to amend specifications and/or prices.

COLORS	7X - Acid Yellow [Glossy] 7U - CK16 [Glossy] 8A - Carina - Silver [Glossy]
FRAME	Bianchi XR24, Aluminium, Disc Brake, for 24" wheels sizes 33
REAR SHOCK	-
FORK	Zoom Suspended fork for 24", 50mm travel
HEADSET	NECO Headset for 1-1/8"
STEM	Bianchi Stem alloy, lenght 50mm
HANDLEBAR	Bianchi Width 580mm, barebore 25.4mm, rise 16mm, backsweep 9°
GRIP / TAPE	Bianchi Rubber grips
SEAT CLAMP	Alloy 31.8
SEATPOST	SP-7019, 27.2mm, 0mm seatback

SADDLE	DDK Memory foam saddle
WHEELSET	Mach1 ER20 24", 32 holes
TIRE	Rubena Ocelot, 24x2.1", 54-507
SHIFTER	Shimano SL-M315, Tourney 8sp
REAR DERAILLEUR	Shimano RD-TY800, Tourney 8sp
CRANKSET	32T, lenght 152mm
CHAIN	KMC 8sp
CASSETTE / FREEWHEEL	Shimano CS-HG31, 8sp, 11-13-15-17-20-23-26-30T
BRAKE LEVER	Shimano BL-T4000 for mechanical disc brake
BRAKE	Shimano BR-TX80 mechanical disc brake, Tourney
FRONT DISK ROTOR	Shimano SM-RT10, 160 mm
REAR DISK ROTOR	Shimano SM-RT10, 160 mm

NEW

XR24 | TOURNEY 8SP | YTB7R



The image shown is indicative only. Components and graphic detail may differ from actual model. Bianchi reserves the right to amend specifications and/or prices.

COLORS	7X - Acid Yellow [Glossy] 7U - CK16 [Glossy] 8A - Carina - Silver [Glossy]
FRAME	Bianchi XR24, Aluminium, Disc Brake, for 24" wheels sizes 33
REAR SHOCK	-
FORK	Zoom Suspended fork for 24", 50mm travel
HEADSET	NECO Headset for 1-1/8"
STEM	Bianchi Stem alloy, lenght 50mm
HANDLEBAR	Bianchi Width 580mm, barebore 25.4mm, rise 16mm, backsweep 9°
GRIP / TAPE	Bianchi Rubber grips
SEAT CLAMP	Alloy 31.8
SEATPOST	SP-7019, 27.2mm, 0mm seatback

SADDLE	DDK Memory foam saddle
WHEELSET	Mach1 ER20 24", 32 holes
TIRE	Rubena Ocelot, 24x2.1", 54-507
SHIFTER	Shimano SL-M315, Tourney 8sp
REAR DERAILLEUR	Shimano RD-TY800, Tourney 8sp
CRANKSET	32T, lenght 152mm
CHAIN	KMC 8sp
CASSETTE / FREEWHEEL	Shimano CS-HG31, 8sp, 11-13-15-17-20-23-26-30T
BRAKE LEVER	Shimano BL-T4000 for mechanical disc brake
BRAKE	Shimano BR-TX80 mechanical disc brake, Tourney
FRONT DISK ROTOR	Shimano SM-RT10, 160 mm
REAR DISK ROTOR	Shimano SM-RT10, 160 mm

NEW

XR24 | TOURNEY 8SP | YTB7R



The image shown is indicative only. Components and graphic detail may differ from actual model. Bianchi reserves the right to amend specifications and/or prices.

COLORS	7X - Acid Yellow [Glossy] 7U - CK16 [Glossy] 8A - Carina - Silver [Glossy]
FRAME	Bianchi XR24, Aluminium, Disc Brake, for 24" wheels sizes 33
REAR SHOCK	-
FORK	Zoom Suspended fork for 24", 50mm travel
HEADSET	NECO Headset for 1-1/8"
STEM	Bianchi Stem alloy, lenght 50mm
HANDLEBAR	Bianchi Width 580mm, barebore 25.4mm, rise 16mm, backsweep 9°
GRIP / TAPE	Bianchi Rubber grips
SEAT CLAMP	Alloy 31.8
SEATPOST	SP-7019, 27.2mm, 0mm seatback

SADDLE	DDK Memory foam saddle
WHEELSET	Mach1 ER20 24", 32 holes
TIRE	Rubena Ocelot, 24x2.1", 54-507
SHIFTER	Shimano SL-M315, Tourney 8sp
REAR DERAILLEUR	Shimano RD-TY800, Tourney 8sp
CRANKSET	32T, lenght 152mm
CHAIN	KMC 8sp
CASSETTE / FREEWHEEL	Shimano CS-HG31, 8sp, 11-13-15-17-20-23-26-30T
BRAKE LEVER	Shimano BL-T4000 for mechanical disc brake
BRAKE	Shimano BR-TX80 mechanical disc brake, Tourney
FRONT DISK ROTOR	Shimano SM-RT10, 160 mm
REAR DISK ROTOR	Shimano SM-RT10, 160 mm

NEW

XR20 | TOURNEY 7SP | YTB15



The image shown is indicative only. Components and graphic detail may differ from actual model. Bianchi reserves the right to amend specifications and/or prices.

COLORS	7C - CK16 - Graphite [Glossy] 7E - Black - Fluo Red [Glossy]
FRAME	Bianchi XR20, Aluminium, V-Brake, for 20" wheels sizes 28
REAR SHOCK	-
FORK	Bianchi XR20, Aluminium, V-Brake, for 20" wheels
HEADSET	NECO Headset for 1-1/8"
STEM	Bianchi Stem alloy, lenght 50mm
HANDLEBAR	Bianchi Width 560mm, barebore 25.4mm, rise 16mm, backsweep 9°
GRIP / TAPE	Bianchi Rubber grips
SEAT CLAMP	Alloy 31.8
SEATPOST	SP-7019, 27.2mm, 0mm seatback

SADDLE	DDK Memory foam saddle
WHEELSET	Mach1 ER10 20", 32 holes
TIRE	Rubena Rubena Cheetah, 20x2.1", 54-406
SHIFTER	Shimano SL-M315, Tourney 7sp
REAR DERAILLEUR	Shimano RD-TY300D, Tourney 7sp
CRANKSET	32T, lenght 140mm
CHAIN	KMC 7sp
CASSETTE / FREEWHEEL	Shimano CS-HG200, 7sp, 12-14-16-18-21-24-28T
BRAKE LEVER	V-brake BL-42G
BRAKE	V-brake TX-122
FRONT DISK ROTOR	-
REAR DISK ROTOR	-

NEW

XR20 | TOURNEY 7SP | YTB15



The image shown is indicative only. Components and graphic detail may differ from actual model. Bianchi reserves the right to amend specifications and/or prices.

COLORS	7C - CK16 - Graphite [Glossy] 7E - Black - Fluo Red [Glossy]
FRAME	Bianchi XR20, Aluminium, V-Brake, for 20" wheels sizes 28
REAR SHOCK	-
FORK	Bianchi XR20, Aluminium, V-Brake, for 20" wheels
HEADSET	NECO Headset for 1-1/8"
STEM	Bianchi Stem alloy, lenght 50mm
HANDLEBAR	Bianchi Width 560mm, barebore 25.4mm, rise 16mm, backsweep 9°
GRIP / TAPE	Bianchi Rubber grips
SEAT CLAMP	Alloy 31.8
SEATPOST	SP-7019, 27.2mm, 0mm seatback

SADDLE	DDK Memory foam saddle
WHEELSET	Mach1 ER10 20", 32 holes
TIRE	Rubena Rubena Cheetah, 20x2.1", 54-406
SHIFTER	Shimano SL-M315, Tourney 7sp
REAR DERAILLEUR	Shimano RD-TY300D, Tourney 7sp
CRANKSET	32T, lenght 140mm
CHAIN	KMC 7sp
CASSETTE / FREEWHEEL	Shimano CS-HG200, 7sp, 12-14-16-18-21-24-28T
BRAKE LEVER	V-brake BL-42G
BRAKE	V-brake TX-122
FRONT DISK ROTOR	-
REAR DISK ROTOR	-

NEW

XR16 | SINGLE SPEED | YTB14



The image shown is indicative only. Components and graphic detail may differ from actual model. Bianchi reserves the right to amend specifications and/or prices.

COLORS	6D - CK16 - Graphite [Glossy] 6E - Blue - Red [Glossy] 6F - Fluo Green - Graphite [Glossy]
FRAME	Bianchi XR16, Aluminium, V-Brake, for 16" wheels sizes 24
REAR SHOCK	-
FORK	Bianchi XR16, Aluminium, V-Brake, for 16" wheels
HEADSET	NECO Headset for 1-1/8"
STEM	Bianchi Stem alloy, lenght 40mm
HANDLEBAR	Bianchi Width 520mm, barebore 25.4mm, rise 0mm, backsweep 6°
GRIP / TAPE	Bianchi Rubber grips
SEAT CLAMP	Alloy 31.8
SEATPOST	SP-7019, 27.2mm, 0mm seatback

SADDLE	DDK Memory foam saddle
WHEELSET	Mach1 KID 16", 20 holes
TIRE	Rubena Cheetah, 16x2.1", 54-305
SHIFTER	-
REAR DERAILLEUR	-
CRANKSET	28T, lenght 127mm
CHAIN	Hebie Single speed with chainlooper
CASSETTE / FREEWHEEL	18T
BRAKE LEVER	V-brake BL-42G
BRAKE	V-brake TX-122
FRONT DISK ROTOR	-
REAR DISK ROTOR	-

NEW

XR16 | SINGLE SPEED | YTB14



The image shown is indicative only. Components and graphic detail may differ from actual model. Bianchi reserves the right to amend specifications and/or prices.

COLORS	6D - CK16 - Graphite [Glossy] 6E - Blue - Red [Glossy] 6F - Fluo Green - Graphite [Glossy]
FRAME	Bianchi XR16, Aluminium, V-Brake, for 16" wheels sizes 24
REAR SHOCK	-
FORK	Bianchi XR16, Aluminium, V-Brake, for 16" wheels
HEADSET	NECO Headset for 1-1/8"
STEM	Bianchi Stem alloy, lenght 40mm
HANDLEBAR	Bianchi Width 520mm, barebore 25.4mm, rise 0mm, backsweep 6°
GRIP / TAPE	Bianchi Rubber grips
SEAT CLAMP	Alloy 31.8
SEATPOST	SP-7019, 27.2mm, 0mm seatback

SADDLE	DDK Memory foam saddle
WHEELSET	Mach1 KID 16", 20 holes
TIRE	Rubena Cheetah, 16x2.1", 54-305
SHIFTER	-
REAR DERAILLEUR	-
CRANKSET	28T, lenght 127mm
CHAIN	Hebie Single speed with chainlooper
CASSETTE / FREEWHEEL	18T
BRAKE LEVER	V-brake BL-42G
BRAKE	V-brake TX-122
FRONT DISK ROTOR	-
REAR DISK ROTOR	-

NEW

XR16 | SINGLE SPEED | YTB14



The image shown is indicative only. Components and graphic detail may differ from actual model. Bianchi reserves the right to amend specifications and/or prices.

COLORS	6D - CK16 - Graphite [Glossy] 6E - Blue - Red [Glossy] 6F - Fluo Green - Graphite [Glossy]
FRAME	Bianchi XR16, Aluminium, V-Brake, for 16" wheels sizes 24
REAR SHOCK	-
FORK	Bianchi XR16, Aluminium, V-Brake, for 16" wheels
HEADSET	NECO Headset for 1-1/8"
STEM	Bianchi Stem alloy, lenght 40mm
HANDLEBAR	Bianchi Width 520mm, barebore 25.4mm, rise 0mm, backsweep 6°
GRIP / TAPE	Bianchi Rubber grips
SEAT CLAMP	Alloy 31.8
SEATPOST	SP-7019, 27.2mm, 0mm seatback

SADDLE	DDK Memory foam saddle
WHEELSET	Mach1 KID 16", 20 holes
TIRE	Rubena Cheetah, 16x2.1", 54-305
SHIFTER	-
REAR DERAILLEUR	-
CRANKSET	28T, lenght 127mm
CHAIN	Hebie Single speed with chainlooper
CASSETTE / FREEWHEEL	18T
BRAKE LEVER	V-brake BL-42G
BRAKE	V-brake TX-122
FRONT DISK ROTOR	-
REAR DISK ROTOR	-

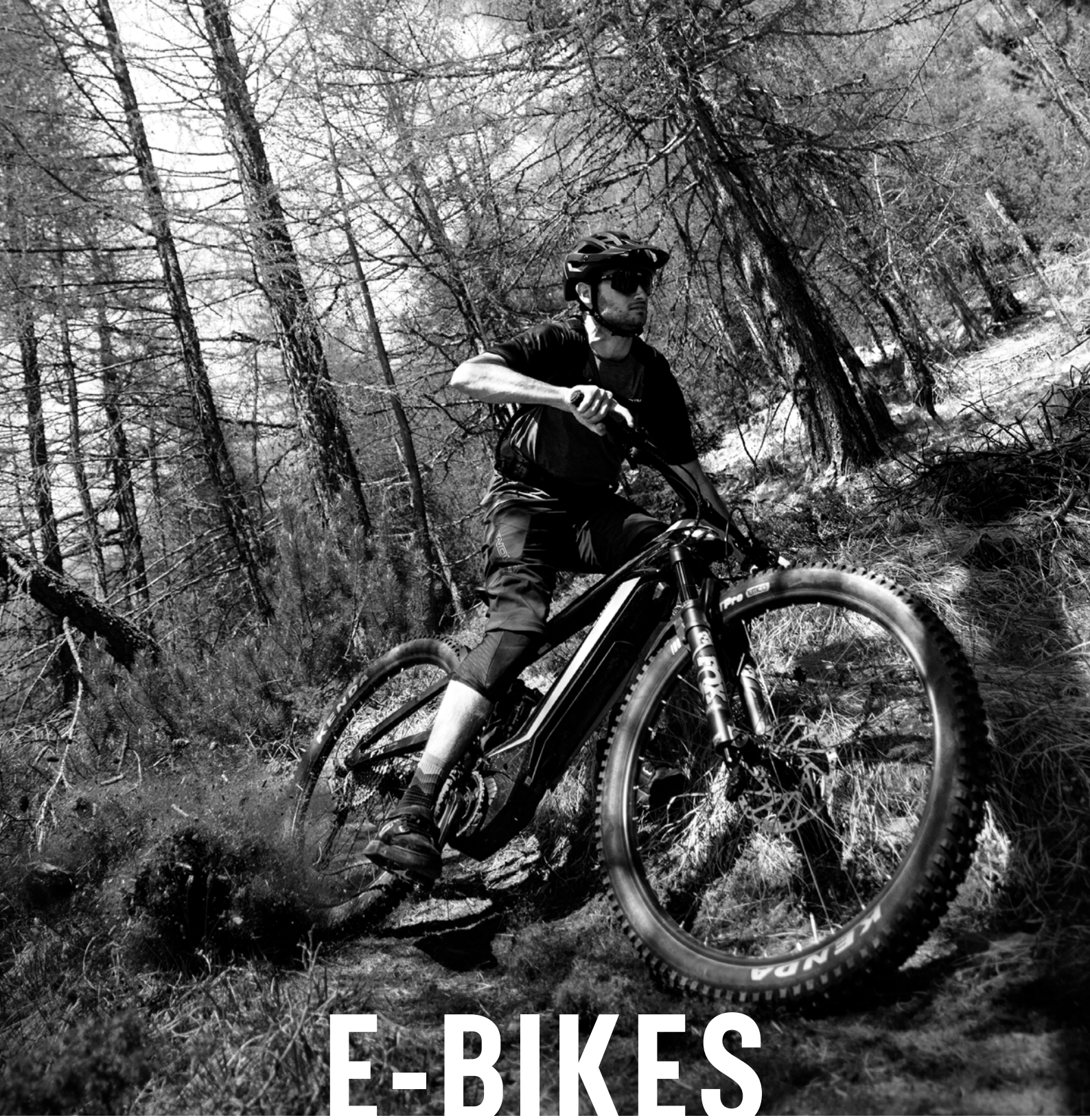

E-BIKES

E-ROAD | E-MTB | E-TOURER | E-URBAN

E-ROAD

E-OLTRE | DURA-ACE 2X12SP X30 250 | YUBN7



The image shown is indicative only. Components and graphic detail may differ from actual model. Bianchi reserves the right to amend specifications and/or prices.

COLOR	ZQ: Celeste metallic / CK16-Graphite Full Matt
FRAME	Oltre e-road carbon, fully internal cable routing, mechanic and electronic groupsets, BB pressfit, disc brake flat mount, OLD 135mm sizes: 47, 50, 53, 55, 57, 59, 61
SEATPOST CLAMP	included in the frame
HEADSET	Acros / FSA, internal cable routing ICR
FORK	Full carbon aero road ICR, integrated head , disc brake flat mount, thru axle 12x100
SHIFTER	Shimano Dura-Ace Di2 12 speed
REAR DERAILLEUR	Shimano Dura-Ace Di2 12 speed RD-R9250
FRONT DERAILLEUR	Shimano Dura-Ace Di2 12 speed FD-R9250
CRANKSET	Shimano Dura-Ace Di2 12 speed, FC-R9200, hollowtech 2, 52x36T Crank Length: 47, 50, 53 - 170mm 55, 57, 59 - 172.5mm 61 - 175mm
BOTTOM BRACKET	Mahle torque sensor BB
CHAIN	Shimano Ultegra 12 sp
CASSETTE / FREEWHEEL	Shimano Ultegra 12sp 11-34T 11-12-13-14-15-17-19-21-24-27-30-34T

BRAKE	included in the shifter
DISC ROTOR	Shimano RT86 6bolt,160mm rear Shimano MT800, centerlock 160mm front
RIM/WHEELSET	Velomann Plutonium, carbon, 21-622, profile 50mm, 24hole front, 32 hole rear, tubeless ready
TIRE	Vittoria Rubino V 28-622 TLR, G2.0, 100TPI
STEM	Reparto Corse integrated handlebar, carbon, for Acros ICR system drop 125mm, reach 80mm Ext: 90/380 (47cm) ; 100/400 (50-53cm) ; 110/400 (55-57cm); 120/420 (59-61cm)
HANDLEBAR	included in the stem
GRIP / TAPE	Bianchi Arrow premium tape, 2.5mm thickness, full black
SEATPOST	Full carbon aero shape, special Clamp type with alloy head adjustable and reversible +/- 35mm; lenghts: 300mm =47› 50cm; 350mm= 53›61
SADDLE	Velomann Mitora Lite 139 saddle 139x250mm, carbon rail 7x9,1mm
MOTOR UNIT	Mahle X30 Drive unit, 45Nm, 250W iWoc ONE head unit, with e-shifters
BATTERY	Mahle 'iX250w Battery Pack

E-OLTRE | ULTEGRA 2X12SP X30 250 | YUBN9



The image shown is indicative only. Components and graphic detail may differ from actual model. Bianchi reserves the right to amend specifications and/or prices.

COLOR	ZQ: Celeste metallic / CK16-Graphite Full Matt
FRAME	Oltre e-road carbon, fully internal cable routing, mechanic and electronic groupsets, BB pressfit, disc brake flat mount, OLD 135mm sizes: 47, 50, 53, 55, 57, 59, 61
SEATPOST CLAMP	included in the frame
HEADSET	Acros / FSA, internal cable routing ICR
FORK	Full carbon aero road ICR, integrated head , disc brake flat mount, thru axle 12x100
SHIFTER	Shimano Ultegra Di2 12 speed
REAR DERAILLEUR	Shimano Ultegra Di2 12 speed RD-R8150
FRONT DERAILLEUR	Shimano Ultegra Di2 12 speed FD-R8150
CRANKSET	Shimano Ultegra Di2 12 speed, FC-R8100, hollowtech 2, 50x34T Crank Length: 47, 50, 53 - 170mm 55, 57, 59 - 172.5mm 61 - 175mm
BOTTOM BRACKET	Mahle torque sensor BB
CHAIN	Shimano 105 12 speed
CASSETTE / FREEWHEEL	Shimano 105 12 speed, 11-34 11-12-13-14-15-17-19-21-24-27-30-34T

BRAKE	included in the shifter
DISC ROTOR	Shimano RT86 6bolt,160mm rear Shimano MT800, centerlock 160mm front
RIM/WHEELSET	Velomann Plutonium, carbon, 21-622, profile 50mm, 24hole front, 32 hole rear, tubeless ready
TIRE	Vittoria Rubino V 28-622 TLR, G2.0, 100TPI
STEM	Velomann, AL6061, fully internal cable routing stem, compatible with Acros AICR system Ext: 90mm (47), 100mm(50/53), 110mm(55/57), 120mm(59/61)
HANDLEBAR	Velomann Aero Compact handlebar, diam. 31,8mm, reach 74mm, drop 116mm, Size: 400mm-47~53cm, 420mm-55~61cm
GRIP / TAPE	Bianchi Hexagon tape, 2.5mm thickness, black
SEATPOST	Full carbon aero shape, special Clamp type with alloy head adjustable and reversible +/- 35mm; lenghts: 300mm =47› 50cm; 350mm= 53›61
SADDLE	Velomann Gnd Full-fit, carbon steel rail, 262x145
MOTOR UNIT	Mahle X30 Drive unit, 45Nm, 250W iWoc ONE head unit, with e-shifters
BATTERY	Mahle 'iX250w Battery Pack

E-OLTRE | 105 2X12SP X30 250 | YUBN8



The image shown is indicative only. Components and graphic detail may differ from actual model. Bianchi reserves the right to amend specifications and/or prices.

COLOR	ZQ: Celeste metallic / CK16-Graphite Full Matt
FRAME	Oltre e-road carbon, fully internal cable routing, mechanic and electronic groupsets, BB pressfit, disc brake flat mount, OLD 135mm sizes: 47, 50, 53, 55, 57, 59, 61
SEATPOST CLAMP	included in the frame
HEADSET	Acros / FSA, internal cable routing ICR
FORK	Full carbon aero road ICR, integrated head , disc brake flat mount, thru axle 12x100
SHIFTER	Shimano 105 12 speed
REAR DERAILLEUR	Shimano 105 12 speed RD-R7100
FRONT DERAILLEUR	Shimano 105 12 speed FD-R7100
CRANKSET	Shimano 105 12 speed, FC-R7100, hollowtech 2, 50x34T Crank Length: 47, 50, 53 - 170mm 55, 57, 59 - 172.5mm 61 - 175mm
BOTTOM BRACKET	Mahle torque sensor BB
CHAIN	Shimano 105 12 speed
CASSETTE / FREEWHEEL	Shimano 105 12 speed, 11-34 11-12-13-14-15-17-19-21-24-27-30-34T

BRAKE	included in the shifter
DISC ROTOR	Shimano RT86 6bolt,160mm rear Shimano MT800, centerlock 160mm front
RIM/WHEELSET	Velomann Plutonium, carbon, 21-622, profile 50mm, 24hole front, 32 hole rear, tubeless ready
TIRE	Vittoria Rubino V 28-622 TLR, G2.0, 100TPI
STEM	Velomann Viper, Alloy 6061, raise - 7°, semi-integrated cable routing Ext:90mm-47cm, 100mm-50~53cm, 110mm-55~57cm, 120mm-59~61cm
HANDLEBAR	Velomann Aero Compact, alloy 6061 diam. 31,8mm, reach 74mm, drop 116mm Size: 400mm-47~53cm,420mm-55~59cm,440mm-61cm
GRIP / TAPE	Bianchi Hexagon tape, 2.5mm thickness, black
SEATPOST	Full carbon aero shape, special Clamp type with alloy head adjustable and reversible +/- 35mm; lenghts: 300mm =47› 50cm; 350mm= 53›61
SADDLE	Velomann Gnd Full-fit, carbon steel rail, 262x145
MOTOR UNIT	Mahle X30 Drive unit, 45Nm, 250W iWoc ONE head unit
BATTERY	Mahle 'iX250w Battery Pack

E-MTB

E-OMNIA FX-TYPE | GX 12 S P | YSB1FF



The image shown is indicative only. Components and graphic detail may differ from actual model. Bianchi reserves the right to amend specifications and/or prices.

COLOR	4J: Blue Navy-CK16 full glossy 4K: Dark graphite-grey full matt BC - Blu Notte / CK16 OR - Black / Grey
FRAME	e-OMNIA FX-Type ALU sizes: 43, 48, 53 - 12x148 mm thru axle dropouts (special dropout for external derailleur) - Post mount 180 disc brake type - 160/150mm travel front - 150mm travel rear
REAR SHOCK	Fox Float, Performance, 185/55, EVOL, Shaft Trunnion, 3 position lever
SEATPOST CLAMP	custom integrated seatpostclamp
HEADSET	FSA NO.55R/558 1.5
FORK	Fox 36 Float eBike optimized 29, Rhythm, 160mm travel, 1.5 tapered HT, QR 15x110mm BOOST axle, minimum 180mm rotor, maximum 230mm rotor, 44mm rake, 58mm crown
SHIFTER	SRAM SX Eagle, 12sp
REAR DERAILLEUR	SRAM GX Eagle, 12sp
CRANKSET	FSA CK-762/IS Forged Alu crank 165 mm ISIS SRAM Eagle 34T
BOTTOM BRACKET	included in the motor
CHAIN	SRAM SX Eagle, 12sp
CASSETTE / FREEWHEEL	SRAM PG1210, 12sp, 11-50T

BRAKE	Shimano, BL-MT501, BR-MT520, 4 piston
DISC ROTOR	Shimano, SM-RT30, 203MM
RIM/WHEELSET	H1900 Spline 27,5 rear" 35mm & 29 front 30mm, 15x110TA front, 12x148TA rear , TL-ready rim w/ eyelets including tubeless band and valve, straight pull spokes, centerlock
TIRE	Front: Pirelli Scorpion E-MTB M 29x2.6 TLR, 60tpi Rear: Pirelli Scorpion E-MTB R 27.5x2.6 TLR, 60tpi
STEM	Velomann +/-0°, 1,1/8 x diam.35mm, 50mm for 15,17,19,21
HANDLEBAR	Velomann, width 780mm, diam.35mm, rise 18mm, backsweep 8°
GRIP / TAPE	T-One Rock T-GP34 single lock grip, TPR, 130mm, plastic inner body, aluminium clamp
SEATPOST	Velomann, diam.31,6mm, internal remote cable routing, 120mm/150mm travel
SADDLE	Velomann Gnd Full-fit Start Up, carbon steel rail, 262x145
FRONT LIGHT	Spanninga custom integrated light, 40 lux
REAR LIGHT	Spanninga custom integrated light
MOTOR UNIT	Oli EDGE, 90 Nm
BATTERY	630Wh integrated battery

E-VERTIC FX



Bianchi

GEOMETRY

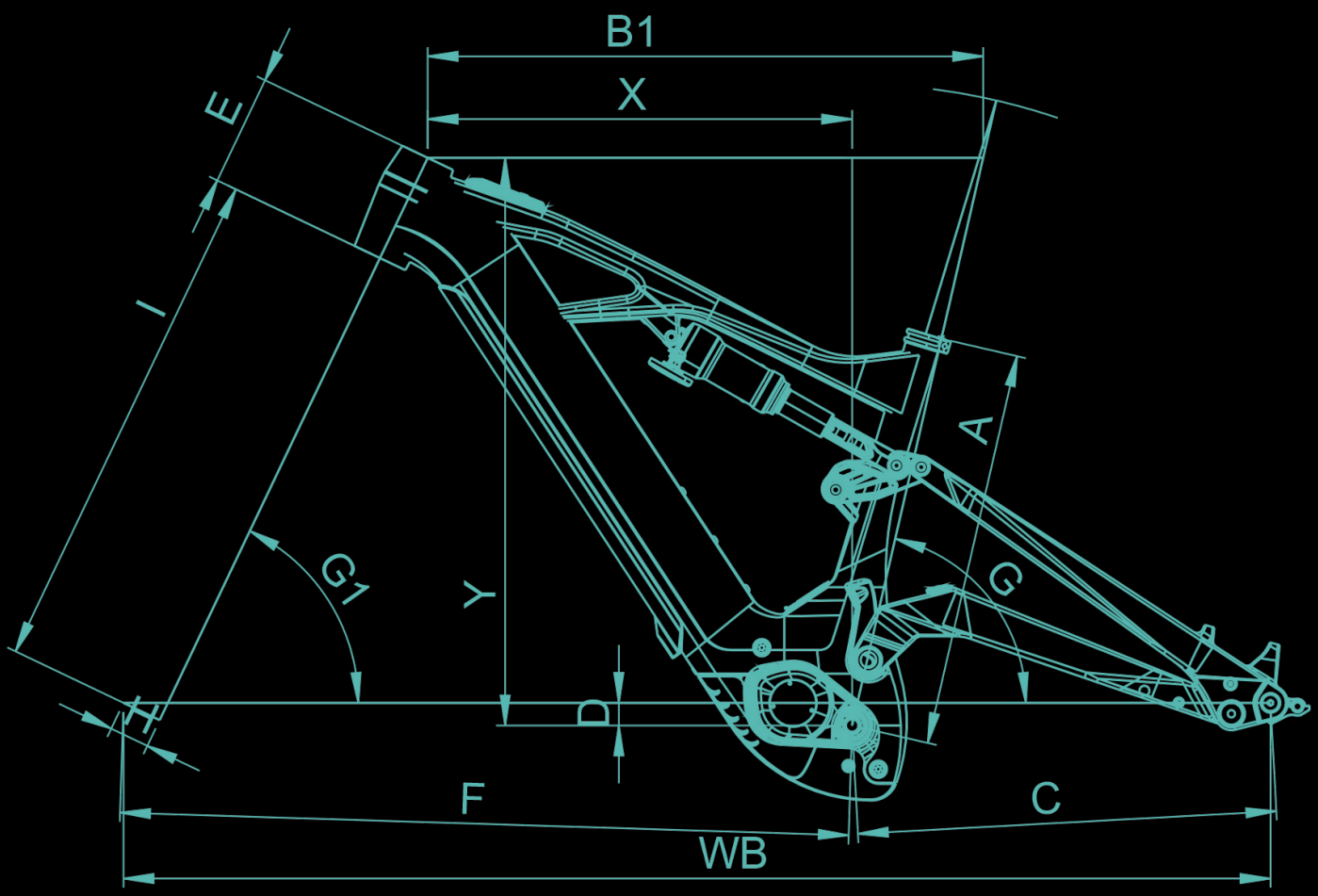

E-VERTIC FX													
SIZE	A	B1	C	D	E	F	G	G1	H	I	X	Y	WB
S	400	589	461	25	120	779	77°	64.5°	44	561	445	623	1239
M	437.5	611	461	25	120	801	77°	64.5°	44	561	467	623	1261
L	480	636	461	25	130	829	77°	64.5°	44	561	490	632	1288
XL	530	659	461	25	145	855	77°	64.5°	44	561	510	645	1315

NEW

E-VERTIC FX 9.1 | SX 12SP | YUBA8



The image shown is indicative only. Components and graphic detail may differ from actual model. Bianchi reserves the right to amend specifications and/or prices.

COLORS	ET - Graphite/Grey Silver - Iridescent [Full Glossy] EV - Greenish Water/Metallic Celeste - Acid [Full Glossy]
FRAME	Bianchi e-Vertic FX, aluminium, 12x148 mm rear thru axle, Post mount 180 disc brake type, Front travel 150 mm, Rear travel 140 mm, Internal cable routing in steerer, 800 Wh battery compatible, sizes 40-44-48-53
REAR SHOCK	RockShox Deluxe Select, 210/52.5 mm for size SM, 210/55 mm for sizes MD, LG, XL, Debonair Progressive, Damper Type R, Rebound tune R55, Compression tune C34, External rebound adjustment
FORK	RockShox Lyrik 29", 150 mm travel, Steerer tube 1,5" tapered, 35 mm stanchions, Maxle Stealth 15x110 Boost axle, Rotor: minimum 180 mm, maximum 220 mm, 44 mm rake
HEADSET	FSA 1.5" for tapered fork steerer, Dual side internal cable routing, Head Block system
STEM	Velomann 1" 1/8, 35 mm barbore Size: 50 mm
HANDLEBAR	Velomann Aluminum, Rise 18 mm, Barbore 35 mm, Size: 780 mm
GRIP / TAPE	Herrmans Luna lock 130 mm
SEAT CLAMP	Bianchi Custom
SEATPOST	Velomann Diameter 31.6 mm, Internal cable routing length: 100 mm - SM, 125 mm - MD, 150 mm - LG/XL

MOTOR / DISPLAY	Bosch Performance Line CX BDU3840 - Kiox 300
BATTERY	Bosch Powertube 800 Wh
SADDLE	Velomann Velomann Gnd Full-fit Start Up, Carbon-steel rail, 262 mm x 145 mm
WHEELSET	Velomann Rim: V22M, 622x28, 32 hole, Tubeless ready; Hubs: Shimano TC500 thru xale
TIRE	Pirelli Scorpion 29x2.6 E-MTB R, 60TPI
SHIFTER	Sram SX Eagle, single click
REAR DERAILLEUR	Sram SX Eagle, 12 sp
CRANKSET	FSA CK-745/IS, Aluminium forged - 165 mm Crank length: 165 mm
CHAIN	Sram SX Eagle, 12 sp
CASSETTE / FREEWHEEL	Sram PG-1210 Eagle, for HG body, 11-13-15-17-19-22-25-28-32-36-42-50T
BRAKE LEVER	Sram DB4, included in the brake
BRAKE	Sram DB4, 4 pistons calipers, mineral oil
FRONT DISK ROTOR	Sram Centerline, 200 mm
REAR DISK ROTOR	Sram Centerline, 200 mm

NEW

E-VERTIC FX 9.2 | SX 12SP | YUBA7



The image shown is indicative only. Components and graphic detail may differ from actual model. Bianchi reserves the right to amend specifications and/or prices.

COLORS	ET - Graphite/Grey Silver - Iridescent [Full Glossy] EV - Greenish Water/Metallic Celeste - Acid [Full Glossy]
FRAME	Bianchi e-Vertic FX, aluminium, 12x148 mm rear thru axle, Post mount 180 disc brake type, Front travel 150 mm, Rear travel 140 mm, Internal cable routing in steerer, 800 Wh battery compatible, sizes 40-44-48-53
REAR SHOCK	RockShox Deluxe Select, 210/52.5 mm for size SM, 210/55 mm for sizes MD, LG, XL, Debonair Progressive, Damper Type R, Rebound tune R55, Compression tune C34, External rebound adjustment
FORK	RockShox Psylo Silver RC 29", 150 mm travel, Steerer tube 1,5" tapered, 35 mm stanchions, Maxle Stealth 15x110 Boost axle, Rotor: minimum 180 mm, maximum 220 mm, 44 mm rake
HEADSET	FSA 1.5" for tapered fork steerer, Dual side internal cable routing, Head Block system
STEM	Velomann 1" 1/8, 35 mm barbore Size: 50 mm
HANDLEBAR	Velomann Aluminum, Rise 18 mm, Barbore 35 mm, Size: 780 mm
GRIP / TAPE	Herrmans Luna lock 130 mm
SEAT CLAMP	Bianchi Custom
SEATPOST	Velomann Diameter 31.6 mm, Internal cable routing length: 100 mm - SM, 125 mm - MD, 150 mm - LG/XL

MOTOR / DISPLAY	Bosch Performance Line CX BDU3840 - Intuvia 100
BATTERY	Bosch Powertube 800 Wh
SADDLE	Velomann Velomann Gnd Full-fit Start Up, Carbon-steel rail, 262 mm x 145 mm
WHEELSET	Velomann Rim: V22M, 622x28, 32 hole, Tubeless ready; Hubs: Shimano TC500 thru xale
TIRE	Pirelli Scorpion 29x2.6 E-MTB M, 60TPI
SHIFTER	Sram SX Eagle, single click
REAR DERAILLEUR	Sram SX Eagle, 12 sp
CRANKSET	FSA CK-745/IS, Aluminium forged - 165 mm Crank length: 165 mm
CHAIN	Sram SX Eagle, 12 sp
CASSETTE / FREEWHEEL	Sram PG-1210 Eagle, for HG body, 11-13-15-17-19-22-25-28-32-36-42-50T
BRAKE LEVER	Sram DB4, included in the brake
BRAKE	Sram DB4, 4 pistons calipers, mineral oil
FRONT DISK ROTOR	Sram Centerline, 200 mm
REAR DISK ROTOR	Sram Centerline, 200 mm

NEW

E-VERTIC FX | GX AXS 12SP | YVB2D



The image shown is indicative only. Components and graphic detail may differ from actual model. Bianchi reserves the right to amend specifications and/or prices.

COLORS	F2 - Chrome Orange/White - Graphite
FRAME	Bianchi e-Vertic FX, aluminium, 12x148 mm rear thru axle, Post mount 180 disc brake type, Front travel 150 mm, Rear travel 140 mm, Internal cable routing in steerer, 800 Wh battery compatible, sizes 44-48-53
REAR SHOCK	Fox Float DPS Performance, 210/55, EVOL
FORK	Fox 38 Float Factory, Kashima coating, 150 mm travel, 1,5" tapered steerer, Kabolt 15x110 mm axle, Minimum rotor: 180 mm, Maximum rotor: 230 mm, FIT4 cartridge, 3 position lever
HEADSET	FSA 1.5" for tapered fork steerer, Dual side internal cable routing, Head Block system
STEM	FSA Comet ST-OS-173, Diameter 28.6 mm, Barbore 35 mm Size: 50 mm
HANDLEBAR	FSA Comet HB-XC-302L, Rise 15 mm, Diameter 35 mm, Width 800 mm
GRIP / TAPE	Herrmans Luna lock 130 mm
SEAT CLAMP	Bianchi Custom
SEATPOST	Velomann Dropper, Diameter 31.6 mm, internal cable routing length: 125 mm - MD, 150 mm - LG/XL

MOTOR / DISPLAY	Bosch Performance Line CX BDU3840 - Kiox 300
BATTERY	Bosch Powertube 800 Wh
SADDLE	Velomann Velomann Gnd Full-fit Start Up, Carbon-steel rail, 262 mm x 145 mm
WHEELSET	Velomann 622x30, 32 hole; Front hub: Shimano HB-TC500; Rear hub: Shimano FH-MT510
TIRE	Pirelli Scorpion 29x2.6 E-MTB, 60TPI
SHIFTER	Sram GX AXS Eagle
REAR DERAILLEUR	Sram GX AXS Eagle 12sp
CRANKSET	Crank length: 165 mm
CHAIN	Sram SX Eagle, 12 sp
CASSETTE / FREEWHEEL	Sram PG-1210 Eagle, for HG body, 11-13-15-17-19-22-25-28-32-36-42-50T
BRAKE LEVER	Magura MT7, included in the brake
BRAKE	Magura MT7, 4 piston
FRONT DISK ROTOR	Magura MDR-C, Centerlock, 203 mm
REAR DISK ROTOR	Magura MDR-C, Centerlock, 203 mm

NEW

E-VERTIC FX | GX AXS 12SP | YVB3D



The image shown is indicative only. Components and graphic detail may differ from actual model. Bianchi reserves the right to amend specifications and/or prices.

COLORS	F2 - Chrome Orange/White - Graphite
FRAME	Bianchi e-Vertic FX, aluminium, 12x148 mm rear thru axle, Post mount 180 disc brake type, Front travel 150 mm, Rear travel 140 mm, Internal cable routing in steerer, 800 Wh battery compatible, sizes 40-44-48-53
REAR SHOCK	RockShox Deluxe Select, 210/55 mm, Debonair Progressive, Damper Type R, Rebound tune R55, Compression tune C34, External rebound adjustment
FORK	RockShox ZEB Select 29B", Travel 150 mm, 15x110 Boost, 38 mm stanchions, 44 mm rake
HEADSET	FSA 1.5" for tapered fork steerer, Dual side internal cable routing, Head Block system
STEM	FSA Comet ST-OS-173, Diameter 28.6 mm, Barbore 35 mm Size: 50 mm
HANDLEBAR	FSA Comet HB-XC-302L, Rise 15 mm, Diameter 35 mm, Width 800 mm
GRIP / TAPE	Herrmans Luna lock 130 mm
SEAT CLAMP	Bianchi Custom
SEATPOST	Velomann Diameter 31.6mm, internal cable routing length: 100 mm - SM, 125 mm - MD, 150 mm - LG/XL

MOTOR / DISPLAY	Bosch Performance Line CX BDU3840 - Kiox 300
BATTERY	Bosch Powertube 800 Wh
SADDLE	Velomann Velomann Gnd Full-fit Start Up, Carbon-steel rail, 262 mm x 145 mm
WHEELSET	Velomann 622x30, 32 hole; Front hub: Shimano HB-TC500; Rear hub: Shimano FH-MT510
TIRE	Pirelli Scorpion 29x2.6 E-MTB, 60TPI
SHIFTER	Sram GX AXS Eagle
REAR DERAILLEUR	Sram GX AXS Eagle 12sp
CRANKSET	Crank length: 165 mm
CHAIN	Sram SX Eagle, 12 sp
CASSETTE / FREEWHEEL	Sram PG-1210 Eagle, for HG body, 11-13-15-17-19-22-25-28-32-36-42-50T
BRAKE LEVER	Magura MT7, included in the brake
BRAKE	Magura MT7, 4 piston
FRONT DISK ROTOR	Magura MDR-C, Centerlock, 203 mm
REAR DISK ROTOR	Magura MDR-C, Centerlock, 203 mm

NEW

E-VERTIC FX | XT 12SP | YVB1D



The image shown is indicative only. Components and graphic detail may differ from actual model. Bianchi reserves the right to amend specifications and/or prices.

COLORS	ET - Graphite/Grey Silver - Iridescent [Full Glossy] EV - Greenish Water/Metallic Celeste - Acid [Full Glossy] F3 - Fading Green – Sand [Full Glossy]
FRAME	Bianchi e-Vertic FX, aluminium, 12x148 mm rear thru axle, Post mount 180 disc brake type, Front travel 150 mm, Rear travel 140 mm, Internal cable routing in steerer, 800 Wh battery compatible, sizes 40-44-48-53
REAR SHOCK	RockShox Deluxe Select, 210/55 mm, Debonair Progressive, Damper Type R, Compression tune L, External rebound adjustment
FORK	RockShox Psylo 29", 150 mm travel, Steerer tube 1,5" tapered, 35 mm stanchions, Maxle Stealth 15x110 Boost axle, Rotor: minimum 180 mm, maximum 220 mm, 44 mm rake
HEADSET	FSA 1.5" for tapered fork steerer, Dual side internal cable routing, Head Block system
STEM	FSA Comet ST-OS-173, Diameter 28.6 mm, Barbore 35 mm Size: 50 mm
HANDLEBAR	FSA Comet HB-XC-302L, Rise 15 mm, Diameter 35 mm, Width 800 mm
GRIP / TAPE	Herrmans Luna lock 130 mm
SEAT CLAMP	Bianchi Custom
SEATPOST	Velomann Diameter 31.6mm, internal cable routing length: 100 mm - SM, 125 mm - MD, 150 mm - LG/XL

MOTOR / DISPLAY	Bosch Performance Line CX BDU3840 - Intuvia 100
BATTERY	Bosch Powertube 800 Wh
SADDLE	Velomann Velomann Gnd Full-fit Start Up, Carbon-steel rail, 262 mm x 145 mm
WHEELSET	Velomann 622x30, 32 hole; Front hub: Shimano HB-TC500; Rear hub: Shimano FH-MT510
TIRE	Pirelli Scorpion 29x2.6 E-MTB, 60TPI
SHIFTER	Shimano Deore SL-M6100, Rapidfire Plus
REAR DERAILLEUR	Shimano XT, RD-M8100, 12sp, Shadow plus design
CRANKSET	Crank length: 165 mm
CHAIN	Shimano CN-M6100
CASSETTE / FREEWHEEL	Shimano Deore, CS-M6100, 10-51T, 10-12-14-16-18-21-24-28-33-39-45-51T
BRAKE LEVER	Sram DB4, included in the brake
BRAKE	Sram DB4, 4 pistons calipers, mineral oil
FRONT DISK ROTOR	Sram Centerline, 200 mm
REAR DISK ROTOR	Sram Centerline, 200 mm


THE NEW
T-TRONIK X
Bianchi

GEOMETRY

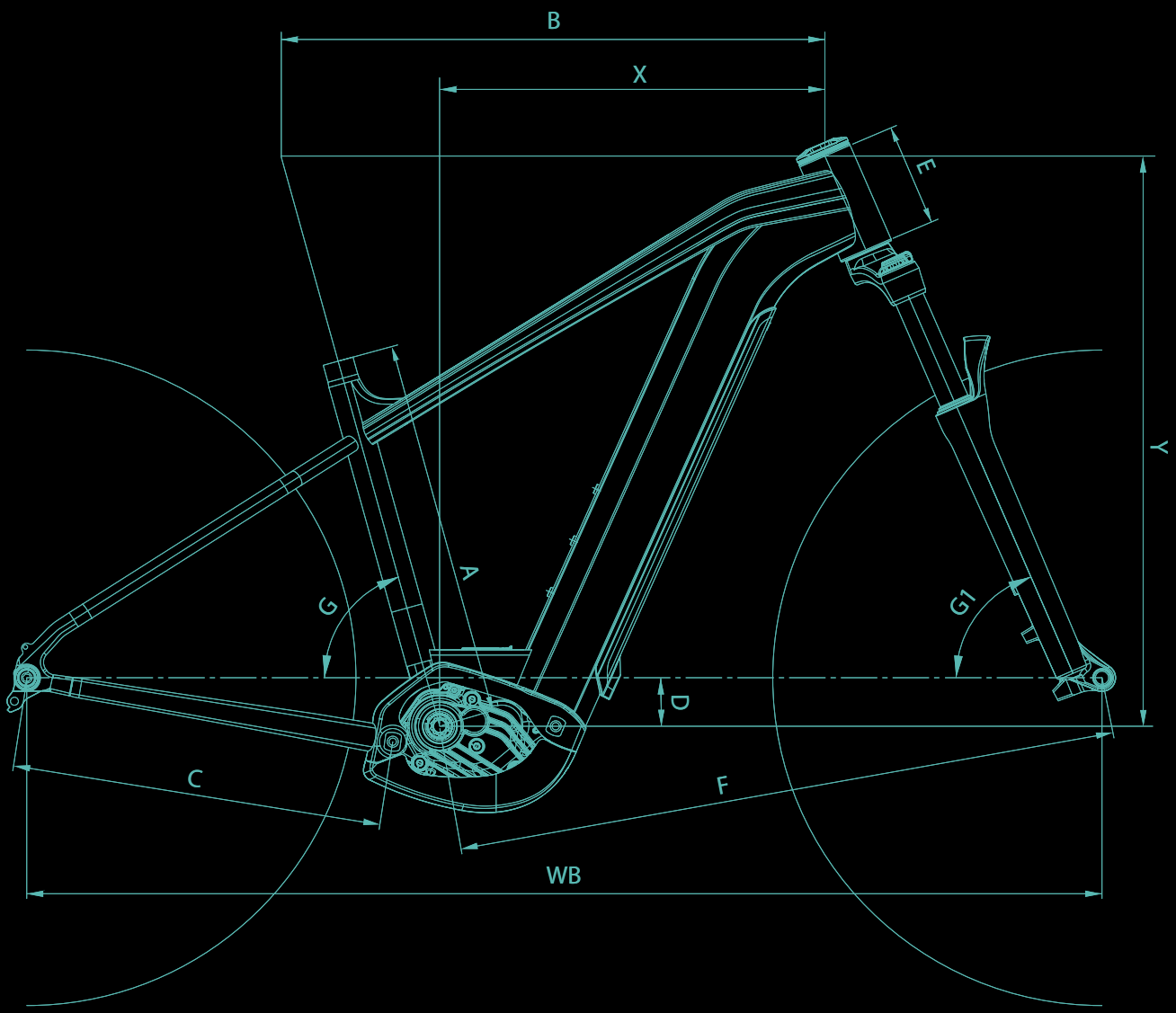

T-Tronik X											
SIZE	A	B	C	D	E	F	G	G1	X	Y	WB
S	400	591	470	55	100	724	74.5°	66.5°	415	634	1189
M	430	615	470	55	116	750	74.5°	66.5°	435	648	1215
L	480	638	470	55	131	776	74.5°	66.5°	455	661	1241
XL	520	662	470	55	146	802	74.5°	66.5°	475	675	1267

NEW

T-TRONIK X 9.1 | DEORE 10SP | YVB7T



The image shown is indicative only. Components and graphic detail may differ from actual model. Bianchi reserves the right to amend specifications and/or prices.

COLORS	YN - Dark Celeste metallic/Celeste metallic [Full Matt] YP - White/Iridescent Blu-Violet [Full Glossy]
FRAME	Bianchi T-Tronik X, aluminium, 12x148 mm rear thru axle, Post mount 180 disc brake type, Front travel 120 mm, Internal cable routing in steerer, 800 Wh battery compatible sizes SM-MD-LG-XL
REAR SHOCK	no_code
FORK	Suntour XCR34X, Air, 120 mm travel, Steerer tube 1,5" tapered, 34 mm stanchions, 15x110 Boost axle, Rotor: minimum 180 mm, maximum 203 mm
HEADSET	Acros Acros Integrated Cable Routing
STEM	Velomann Viper0, alloy, Diameter 28.6 mm, Barbore 31,8 mm Size: 60 mm
HANDLEBAR	Velomann Aluminium, Rise 15 mm, Barbore 31.8 mm, Width 740 mm Size: 740 mm
GRIP / TAPE	Herrmans Luna lock 130 mm
SEAT CLAMP	Ursus Alloy, Quick Release, Diameter 34,9 mm
SEATPOST	Velomann AL2014, Diameter: 31,6 mm, Seatback: 0 mm for size SM; Dropper, travel 125 mm for size MD-LG; Dropper, travel 150 mm for size XL

MOTOR / DISPLAY	Bosch Performance Line CX BDU3840 - Purion 200
BATTERY	Bosch Powertube 800 Wh
SADDLE	Velomann Velomann Gnd Full-fit Start Up, Carbon-steel rail, 262 mm x 145 mm
WHEELSET	Velomann 622x30, 32 hole; Front hub: Shimano TC500 Thru axle; Rear hub: Shimano TC500 Thru axle
TIRE	Obor Mike Bear, 29"x2,35", 60 TPI
SHIFTER	Shimano Deore SL-M4100, Rapidfire Plus
REAR DERAILLEUR	Shimano Deore, RD-M4120, 10sp, Shadow design
CRANKSET	FSA CK-320/IS, Aluminium DieCast, Crank length: 170 mm
CHAIN	KMC e10S EPT, Anti-Rust
CASSETTE / FREEWHEEL	Sunrace CSMS2, 11-42T
BRAKE LEVER	Sram Guide T, included in the brake
BRAKE	Sram Guide T, 4 piston
FRONT DISK ROTOR	Sram Centerline, 200 mm
REAR DISK ROTOR	Sram Centerline, 180 mm

NEW

T-TRONIK X 9.2 | DEORE 10SP | YVB8T



The image shown is indicative only. Components and graphic detail may differ from actual model. Bianchi reserves the right to amend specifications and/or prices.

COLORS	YN - Dark Celeste metallic/Celeste metallic [Full Matt] YP - White/Iridescent Blu-Violet [Full Glossy]
FRAME	Bianchi T-Tronik X, aluminium, 12x148 mm rear thru axle, Post mount 180 disc brake type, Front travel 120 mm, Internal cable routing in steerer, 800 Wh battery compatible sizes SM-MD-LG-XL
REAR SHOCK	no_code
FORK	Suntour XCR34X, Air, 120 mm travel, Steerer tube 1,5" tapered, 34 mm stanchions, 15x110 Boost axle, Rotor: minimum 180 mm, maximum 203 mm
HEADSET	FSA 1.5" for tapered fork steerer, Dual side internal cable routing
STEM	Velomann Viper0, alloy, Diameter 28.6 mm, Barbore 31,8 mm Size: 60 mm
HANDLEBAR	Velomann Aluminium, Rise 15 mm, Barbore 31.8 mm, Width 740 mm Size: 740 mm
GRIP / TAPE	Herrmans Luna lock 130 mm
SEAT CLAMP	Ursus Alloy, Quick Release, Diameter 34,9 mm
SEATPOST	Velomann AL2014, Diameter: 31,6 mm, Seatback: 0 mm for size SM; Dropper, travel 125 mm for size MD-LG; Dropper, travel 150 mm for size XL

MOTOR / DISPLAY	Bosch Performance Line BDU3460, 75 Nm - Purion 200
BATTERY	Bosch Powertube 600 Wh Horizontal
SADDLE	Velomann Velomann Gnd Full-fit Start Up, Carbon-steel rail, 262 mm x 145 mm
WHEELSET	Velomann 622x30, 32 hole; Front hub: Shimano TC500 Thru axle; Rear hub: Shimano TC500 Thru axle
TIRE	Obor Mike Bear, 29"x2,35", 60 TPI
SHIFTER	Shimano Deore SL-M4100, Rapidfire Plus
REAR DERAILLEUR	Shimano Deore, RD-M4120, 10sp, Shadow design
CRANKSET	FSA CK-320/IS, Aluminium DieCast, Crank length: 170 mm
CHAIN	KMC e10S EPT, Anti-Rust
CASSETTE / FREEWHEEL	Sunrace CSMS2, 11-42T
BRAKE LEVER	Shimano Deore BL-MT401
BRAKE	Shimano Deore BR-MT410, 2 piston, resin pad
FRONT DISK ROTOR	Promax DT-203H, 203 mm
REAR DISK ROTOR	Promax DT-180CLA, 180 mm

E-TOURER

NEW

T-TRONIK X 9.2 TREKKING | DEORE 10SP | YVB9T



The image shown is indicative only. Components and graphic detail may differ from actual model. Bianchi reserves the right to amend specifications and/or prices.

COLORS	YN - Dark Celeste metallic/Celeste metallic [Full Matt] YP - White/Iridescent Blu-Violet [Full Glossy]
FRAME	Bianchi T-Tronik X, aluminium, 12x148 mm rear thru axle, Post mount 180 disc brake type, Front travel 120 mm, Internal cable routing in steerer, 800 Wh battery compatible sizes SM-MD-LG-XL
FORK	Suntour XCR34X, Air, 120 mm travel, Steerer tube 1,5" tapered, 34 mm stanchions, 15x110 Boost axle, Rotor: minimum 180 mm, maximum 203 mm
HEADSET	FSA 1.5" for tapered fork steerer, Dual side internal cable routing
STEM	Velomann Viper0, alloy, Diameter 28.6 mm, Barbore 31,8 mm Size: 60 mm
HANDLEBAR	Velomann Aluminium, Rise 15 mm, Barbore 31.8 mm, Width 740 mm Size: 740 mm
GRIP / TAPE	Herrmans Luna lock 130 mm
SEAT CLAMP	Ursus Alloy, Quick Release, Diameter 34,9 mm
SEATPOST	Velomann AL2014, Diameter: 31,6 mm, Seatback: 0 mm for size SM; Dropper, travel 125 mm for size MD-LG; Dropper, travel 150 mm for size XL
SADDLE	Velomann Velomann Gnd Full-fit Start Up, Carbon-steel rail, 262 mm x 145 mm
WHEELSET	Velomann 622x30, 32 hole; Front hub: Shimano TC500 Thru axle; Rear hub: Shimano TC500 Thru axle

MOTOR / DISPLAY	Bosch Performance Line BDU3460, 75 Nm - Purion 200
BATTERY	Bosch Powertube 600 Wh Horizontal
TIRE	Rubena Cityhopper, 28"x2,00"; Antipuncture, Reflex
SHIFTER	Shimano Deore SL-M4100, Rapidfire Plus
REAR DERAILLEUR	Shimano Deore, RD-M4120, 10sp, Shadow design
CRANKSET	FSA CK-320/IS, Aluminium DieCast, Crank length: 170 mm
CHAIN	KMC e10S EPT, Anti-Rust
CASSETTE / FREEWHEEL	Sunrace CSMS2, 11-42T
BRAKE LEVER	Shimano Deore BL-MT401
BRAKE	Shimano Deore BR-MT410, 2 piston, resin pad
FRONT DISK ROTOR	Promax DT203H, 203 mm
REAR DISK ROTOR	Promax DT180CLA, 180 mm
PEDALS	FPD NW-91K, PP black body, Steel cage
FRONT LIGHT	Spanninga X&O 50, 50lux
REAR LIGHT	Spanninga Pimento large, w/ reflector
KICKSTAND	Ursus MOOI PLUS, 40Kg max system weight
MUDGUARDS	Marcon Primo 65, alluminium

E-OMNIA T-TYPE

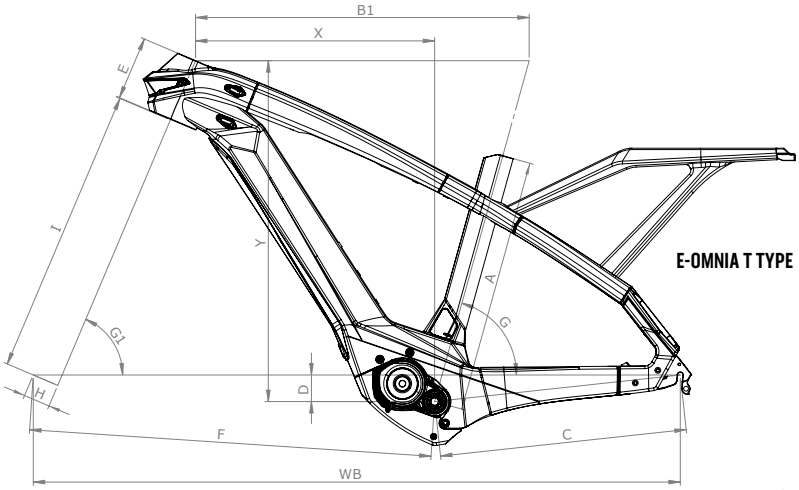

E-OMNIA T TYPE

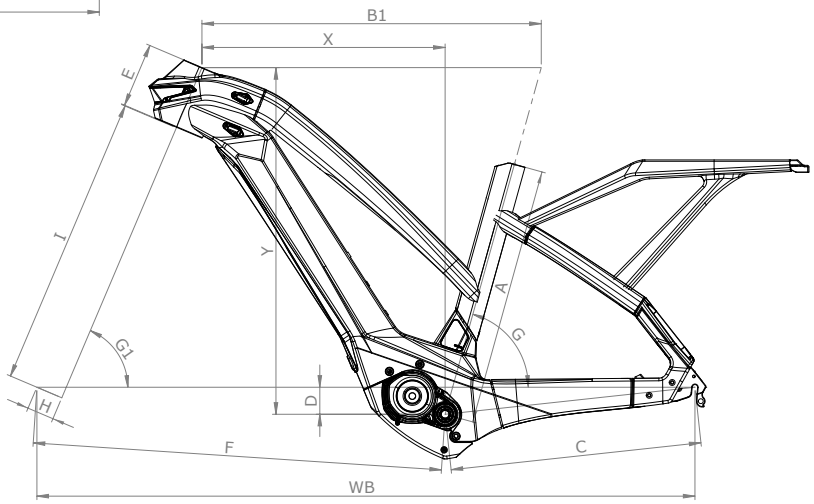

E-OMNIA T TYPE STEP-THROUGH

E-Omnia T Type													
SIZE	A	B1	C	D	E	F	G	G1	H	I	X	Y	WB
M	440	607	465	50	116	732	74.5°	67°	47	541	430	637	1192
L	480	628	465	50	121	753	74.5°	67°	47	541	450	641	1214
XL	520	649	465	50	126	775	74.5°	67°	47	541	470	646	1236

E-OMNIA T-TYPE | STEP-THROUGH DEORE 10SP | YTB5E



The image shown is indicative only. Components and graphic detail may differ from actual model. Bianchi reserves the right to amend specifications and/or prices.

COLOR	4D - CK16/dark celeste full matt 4E - Metal Brown/Graphite full matt 4F - Metal grey/graphite full matt
FRAME	E-OMNIA T-Type Step-through chain drive ALU sizes: 43-48-53 - 12x148mm thru-axle dropouts (special dropout for external derailleur) - Post mount 180 disc brake type - Internal cable routing in DT - Frame lock compatible - 625Wh compatible - custom rear carrier integrated in the frame design
HEADSET	NO.55R/558 1.5"
FORK	Sram XCM34-Boost NLO DS 29", 120mm travel, 1.5" tapered HT, w/ 15AH2-110 TA, minimum 160mm rotor, maximum 203mm rotor, 34mm stanchions, Coil w/ preload adjuster
SHIFTER	Shimano, SL-M4100-R, DEORE, RIGHT, 10-SPEED
REAR DERAILLEUR	Shimano, RD-M4120, DEORE, SGS 10/11-SPEED
CRANKSET	FSA CK-320/IS Die cast AL crank 170mm ISIS
BOTTOM BRACKET	included in the motor
CHAIN	KMC e10S NPBK
CASSETTE / FREEWHEEL	Sunrace, 10sp, 11-42T
BRAKE	Shimano MT-200
DISC ROTOR	CDM-80FD, 180mm

FRONT HUB	Formula CL-811 for Center Lock, 32h, 15x110mm TA
REAR HUB	Shimano, FH-MT400-B, CENTER LOCK DISC, 8-11-SPEED FOR 12MM THRU TYPE AXLE, 32H OLD:148MM
RIM/WHEELSET	Velomann Tubeless Ready 29", 25-622
TIRE	Vittoria e-Randonneur, 50-622
STEM	Velomann, diam. 31,8, size: 90mm for SM, 110mm for LG, MD
HANDLEBAR	Velomann, 31.8/680mm, RISE 20MM, SWEEP 15°
GRIP / TAPE	Hermans Grip 130
SEATPOST	Velomann, 31.6*350, suspension seatpost
SADDLE	Velomann, steel rail, no clamp, 285x187mm
PEDALS	VP VPE-527 ED, axle 7mm boron steel, EPB system size 116x103mm with reflector
FRONT LIGHT	Spanninga custom integrated light, 40 lux
REAR LIGHT	Spanninga custom integrated light
REAR CARRIER / PLATE	custom rear carrier integrated into the frame design
KICKSTAND	Velomann load 35kg
MUDGUARD / STAY	SKS PET Mudguards A65 R /28
MOTOR UNIT	OLI Edge, 90Nm, 250W Display High Vision
BATTERY	Internal battery 630Wh

E-OMNIA T-TYPE | DEORE 10SP | YTB4E



The image shown is indicative only. Components and graphic detail may differ from actual model. Bianchi reserves the right to amend specifications and/or prices.

COLOR	4D - CK16/dark celeste full matt 4E - Metal Brown/Graphite full matt 4F - Metal grey/graphite full matt
FRAME	E-OMNIA T-Type chain drive ALU sizes: 43-48-53 - 12x148mm thru-axle dropouts (special dropout for external derailleur) - Post mount 180 disc brake type - Internal cable routing in DT - Frame lock compatiblex - 625Wh compatible - custom rear carrier integrated in the frame design
HEADSET	NO.55R/558 1.5"
FORK	Sram XCM34-Boost NLO DS 29", 120mm travel, 1.5" tapered HT, w/ 15AH2-110 TA, minimum 160mm rotor, maximum 203mm rotor, 34mm stanchions, Coil w/ preload adjuster
SHIFTER	Shimano, SL-M4100-R, DEORE, RIGHT, 10-SPEED
REAR DERAILLEUR	Shimano, RD-M4120, DEORE, SGS 10/11-SPEED
CRANKSET	FSA CK-320/IS Die cast AL crank 170mm ISIS
BOTTOM BRACKET	included in the motor
CHAIN	KMC e10S NPBK
CASSETTE / FREEWHEEL	Sunrace, 10sp, 11-42T
BRAKE	Shimano MT-200
DISC ROTOR	CDM-80FD, 180mm

FRONT HUB	Formula CL-811 for Center Lock, 32h, 15x110mm TA
REAR HUB	Shimano, FH-MT400-B, CENTER LOCK DISC, 8-11-SPEED FOR 12MM THRU TYPE AXLE, 32H OLD:148MM
RIM/WHEELSET	Velomann Tubeless Ready 29", 25-622
TIRE	Vittoria e-Randonneur, 50-622
STEM	Velomann, diam. 31,8, size: 90mm for SM, 110mm for LG, MD
HANDLEBAR	Velomann, 31.8/680mm, RISE 20MM, SWEEP 15°
GRIP / TAPE	Hermans Grip 130
SEATPOST	Velomann, 31.6*350, suspension seatpost
SADDLE	Velomann, steel rail, no clamp, 285x187mm
PEDALS	VP VPE-527 ED, axle 7mm boron steel, EPB system size 116x103mm with reflector
FRONT LIGHT	Spanninga custom integrated light, 40 lux
REAR LIGHT	Spanninga custom integrated light
REAR CARRIER / PLATE	custom rear carrier integrated into the frame design
KICKSTAND	Velomann load 35kg
MUDGUARD / STAY	SKS PET Mudguards A65 R /28
MOTOR UNIT	OLI Edge, 90Nm, 250W Display High Vision
BATTERY	Internal battery 630Wh

E SPILLO CLASSIC | ALTUS 1X8SP | YSBT2



The image shown is indicative only. Components and graphic detail may differ from actual model. Bianchi reserves the right to amend specifications and/or prices.

COLOR	ST: Gun Metal/Black Full Mtt SU: CK16/Black Full Glossy
FRAME	E-Spillo Classic , Alu PG 6061,V-brake, O.L.D.139mm for rear hub motor unit, sizes: 47, 53cm
SEATPOST CLAMP	MX-112 Alloy, diam. 31,8mm
HEADSET	VP-MH305C Semi-integrated
FORK	Bianchi Steel, V-Brake
SHIFTER	Shimano Altus 8sp
REAR DERAILLEUR	Shimano Altus 8sp
CRANKSET	Prowheel Ounce-248AC 48T, crank length 170mm
BOTTOM BRACKET	axle length:124mm, w/speed sensor
CHAIN	Kmc Z8.1 8sp
CASSETTE / FREEWHEEL	Shimano CS-HG200-8, 8sp, 12-14-16-18-21-24-28-32T
BRAKE	V-Brake Alloy
BRAKE LEVER	V-Brake levers 4 fingers
FRONT HUB	Formula FM-21, 36hole, 14G, O.L.D. 100mm, w/QR
REAR HUB	EGoing Rear hub motor unit

RIM/WHEELSET	Spectra 622-19
TIRE	Spectra Unda Regular 700x37, 37-622 27TPI
STEM	Alloy adjustable, diam. 25,4mm, ext: 85mm, quill length: 180mm
HANDLEBAR	Alloy, width 590mm, rise 26mm, diam. 25.4mm, 33° backsweep
GRIP / TAPE	Herrmans 130mm
SEATPOST	Alloy diam. 27.2mm, length: 350mm
SADDLE	Selle Royal Wave
FRONT LIGHT	Retro Sport for ebike, 20lux. 0,5w LED IP144
REAR LIGHT	included in the SR11 battery
REAR CARRIER	AtranVelo Sport 28" Aluminium
KICKSTAND	Atranvelo KS Rex Atran 235
MUDGUARD	Steel
MOTOR UNIT	EGoing Rear hub motor unit 36V,250W, OLD 135mm w/418Wh rear carrier SR11 battery, w/led display, w/ speed sensor

E SPILLO CLASSIC | ALTUS 1X8SP | YSBT3



The image shown is indicative only. Components and graphic detail may differ from actual model. Bianchi reserves the right to amend specifications and/or prices.

COLOR	ST: Gun Metal/Black Full Mtt
FRAME	E-Spillo Classic Step Thru, Alu PG 6061,V-brake, O.L.D.139mm for rear hub motor unit, sizes: 43, 47cm
SEATPOST CLAMP	MX-112 Alloy, diam. 31,8mm
HEADSET	VP-MH305C Semi-integrated
FORK	Bianchi Steel, V-Brake
SHIFTER	Shimano Altus 8sp
REAR DERAILLEUR	Shimano Altus 8sp
CRANKSET	Prowheel Ounce-248AC 48T, crank length 170mm
BOTTOM BRACKET	axle length:124mm, w/speed sensor
CHAIN	Kmc Z8.1 8sp
CASSETTE / FREEWHEEL	Shimano CS-HG200-8, 8sp, 12-14-16-18-21-24-28-32T
BRAKE	V-Brake Alloy
BRAKE LEVER	V-Brake levers 4 fingers
FRONT HUB	Formula FM-21, 36hole, 14G, O.L.D. 100mm, w/QR
REAR HUB	EGoing Rear hub motor unit
RIM/WHEELSET	Spectra 622-19
TIRE	Spectra Unda Regular 700x37, 37-622 27TPI

STEM	Alloy adjustable, diam. 25,4mm, ext: 85mm, quill length: 180mm
HANDLEBAR	Alloy, width 590mm, rise 26mm, diam. 25.4mm, 33° backsweep
GRIP / TAPE	Herrmans 130mm
SEATPOST	Alloy diam. 27.2mm, length: 350mm
SADDLE	Selle Royal Wave
FRONT LIGHT	Retro Sport for ebike, 20lux. 0,5w LED IP144
REAR LIGHT	included in the SR11 battery
KICKSTAND	Atranvelo KS Rex Atran 235
MUDGUARD	Steel
MOTOR UNIT	EGoing Rear hub motor unit 36V,250W, OLD 135mm w/418Wh rear carrier SR11 battery, w/led display, w/ speed sensor

E-URBAN

NEW

T-TRONIK C 8.2 BELT | NEXUS 5SP | YVB3A



The image shown is indicative only. Components and graphic detail may differ from actual model. Bianchi reserves the right to amend specifications and/or prices.

COLORS	YF - Graphite - Sage Green [Full Matt] YI - Rose Metallic - Bordeaux [Full Matt] YJ - Celeste Metallic - Dark Celeste Metallic [Full Glossy]
FRAME	Bianchi T-Tronik C, aluminium, 9x135mm rear quick release, Post mount 160 disc brake type, Front travel 80 mm, Internal cable routing in steerer, 800 Wh battery compatible, sizes SM-MD-LG-XL
FORK	Suntour NVX32 29", Coil, 80 mm travel, Steerer tube 1,5" tapered, 32 mm stanchions, 15x110 Boost axle, Rotor: minimum 180 mm, maximum 203 mm
HEADSET	FSA 1.5" for tapered fork steerer, Dual side internal cable routing
STEM	Velomann Aluminium, Adjustable, Barbore: 31,8 mm
HANDLEBAR	Velomann Wien, Aluminium, Rise 20 mm, Barbore 31.8 mm, Backsweep 15° Size: 680 mm
GRIP / TAPE	Herrmans Luna Lock 90-130 mm
SEAT CLAMP	Ursus Alloy, Quick Release, Diameter 34,9 mm
SEATPOST	Velomann Suspended 50 mm for size SM; Dropper suspended, 80 mm travel + 40 mm suspension for size MD, LG, XL
SADDLE	Selle Royal Essenza
WHEELSET	Velomann 622x25, 32 hole; Front hub: Shimano TC500 Thru axle; Rear hub: Shimano Nexus 5sp; Spoke pattern 4x8

MOTOR / DISPLAY	Bosch Performance Line BDU3460, 75 Nm - Purion 200
BATTERY	Bosch Powertube 600 Wh Horizontal
TIRE	Rubena Cityhopper, 28"x2,00"; Antipuncture, Reflex
SHIFTER	Shimano Nexus 5 SL-C7000-5, Revoshifter
REAR DERAILLEUR	Shimano Included in the rear hub
CRANKSET	FSA CK-320/IS, Aluminium DieCast, Crank length: 170 mm
CHAIN	Gates CDC 130T
CASSETTE / FREEWHEEL	Gates CDX 32T
BRAKE LEVER	Shimano Deore BL-MT401
BRAKE	Shimano Deore BR-MT410, 2 piston, resin pad
FRONT DISK ROTOR	Shimano SM-RT10, 180 mm
REAR DISK ROTOR	Shimano SM-RT10, 180 mm
PEDALS	VP VPE-889P, w/reflectors
FRONT LIGHT	Lezyne Mini E65, 65 lux
REAR LIGHT	Spanninga Pimento large, w/ reflector
KICKSTAND	Ursus MOOI PLUS, 40Kg max system weight
MUDGUARDS	Marcon Primo 65, alluminium

NEW

T-TRONIK C 8.2 CHAIN | DEORE 10SP | YVB1A



The image shown is indicative only. Components and graphic detail may differ from actual model. Bianchi reserves the right to amend specifications and/or prices.

COLORS	YF - Graphite - Sage Green [Full Matt] YI - Rose Metallic - Bordeaux [Full Matt] YJ - Celeste Metallic - Dark Celeste Metallic [Full Glossy]
FRAME	Bianchi T-Tronik C, aluminium, 9x135mm rear quick release, Post mount 160 disc brake type, Front travel 80 mm, Internal cable routing in steerer, 800 Wh battery compatible, sizes SM-MD-LG-XL
FORK	Suntour NVX32 29", Coil, 80 mm travel, Steerer tube 1,5" tapered, 32 mm stanchions, 15x110 Boost axle, Rotor: minimum 180 mm, maximum 203 mm
HEADSET	FSA 1.5" for tapered fork steerer, Dual side internal cable routing
STEM	Velomann Aluminium, Adjustable, Barbore: 31,8 mm
HANDLEBAR	Velomann Wien, Aluminium, Rise 20 mm, Barbore 31.8 mm, Backsweep 15° Size: 680 mm
GRIP / TAPE	Herrmans Oxy 130 mm
SEAT CLAMP	Ursus Alloy, Quick Release, Diameter 34,9 mm
SEATPOST	Velomann Suspended 50 mm for size SM; Dropper suspended, 80 mm travel + 40 mm suspension for size MD, LG, XL
SADDLE	Selle Royal Essenza
WHEELSET	Velomann 622x25, 32 hole; Front hub: Shimano TC500 Thru axle; Rear hub: Formula CL-1422 Quick Release; Spoke pattern 4x8

MOTOR / DISPLAY	Bosch Performance Line BDU3460, 75 Nm - Purion 200
BATTERY	Bosch Powertube 600 Wh Horizontal
TIRE	Rubena Cityhopper, 28"x2,00"; Antipuncture, Reflex
SHIFTER	Shimano Deore SL-M4100, Rapidfire Plus
REAR DERAILLEUR	Shimano Deore, RD-M4120, 10sp, Shadow design
CRANKSET	FSA CK-320/IS, Aluminium DieCast, Crank length: 170 mm
CHAIN	KMC e10S EPT, Anti-Rust
CASSETTE / FREEWHEEL	Sunrace CSMS2, 11-42T
BRAKE LEVER	Shimano Deore BL-MT401
BRAKE	Shimano Deore BR-MT410, 2 piston, resin pad
FRONT DISK ROTOR	Shimano SM-RT10, 180 mm
REAR DISK ROTOR	Shimano SM-RT10, 180 mm
PEDALS	VP VPE-889P, w/reflectors
FRONT LIGHT	Lezyne Mini E65, 65 lux
REAR LIGHT	Spanninga Pimento large, w/ reflector
KICKSTAND	Ursus MOOI PLUS, 40Kg max system weight
MUDGUARDS	Marcon Primo 65, alluminium

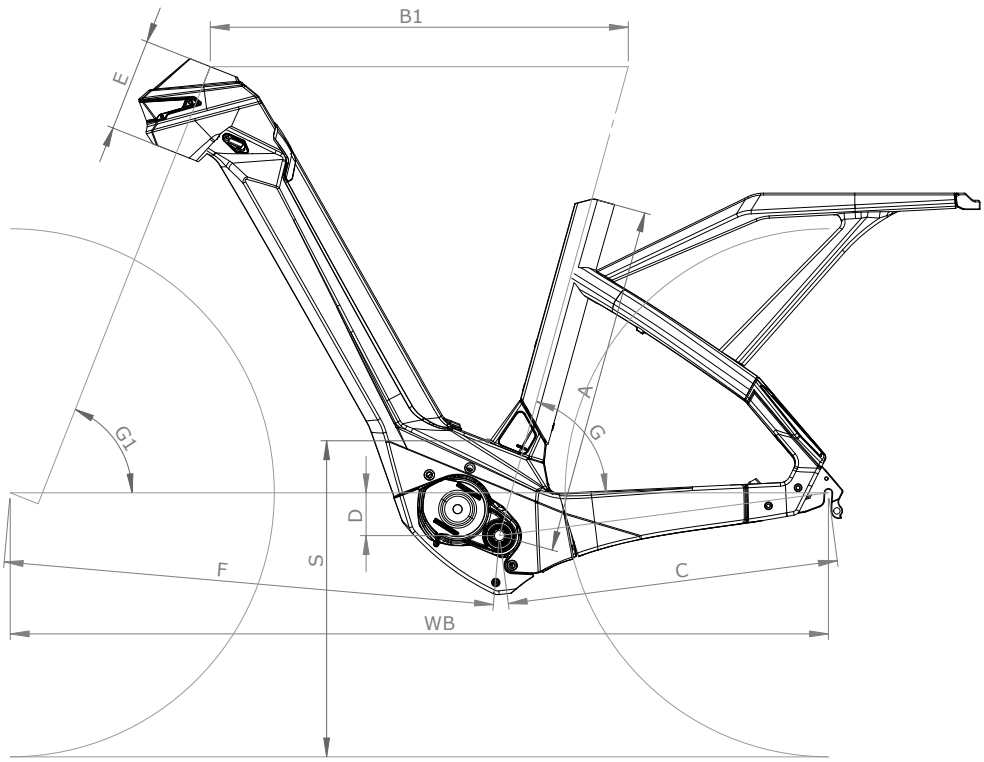

E-Omnia C type									
SIZE	A	B1	C	D	E	G	G1	S	WB
S	450	600	465	60	130	74.5°	68.5°	443	1147
M	500	615	465	60	135	74.5°	68.5°	443	1162
L	550	630	465	60	135	74°	68.5°	443	1177

E-OMNIA C-TYPE KEY FEATURES

- Battery options 500Wh/625Wh
- Torque 85Nm
- Integrated front (40lux), rear and side led lights
- Visibility-range of 100 metres, and visibility to others at 500 metres
- Bianchi custom mudguard
- Integrated seat clamp

E-OMNIA C-TYPE | DEORE 10SP | YSBE8F



The image shown is indicative only. Components and graphic detail may differ from actual model. Bianchi reserves the right to amend specifications and/or prices.

COLOR	4G - CK16 / Dark celeste full MATT 4H - Metal Brown / Graphite full MATT 4I - Metal Grey / Graphite full matt 3T - CK16 full GLOSSY
FRAME	E-OMNIA C-Type chain drive ALU sizes: 45-50-55 - 9x135 mm quick release dropouts (special dropout for external derailleur) - Post mount 180 disc brake type - Internal cable routing in DT - Frame lock compatible - 625Wh compatible - custom rear carrier integrated in the frame design
SEATPOST CLAMP	custom integrated seatpostclamp
HEADSET	FSA NO.55R/558 1.5
FORK	Suntour XCM34-Boost LOR DS 29, 100mm travel, 1.5 tapered HT, w/ 15AH2-110 TA, minimum 160mm rotor, maximum 203mm rotor, 34mm stanchions
SHIFTER	Shimano, SL-M4100-R, Deore, 10-SPEED
REAR DERAILLEUR	Shimano, RD-M4120, DEORE, SGS 10/11-SPEED
CRANKSET	FSA Metropolis, AL-8/IS FSA Alloy E-bike ISIS Crank, ISIS / 170mm, FSA Chainline 50mm, FSA Chainring
BOTTOM BRACKET	included in the motor
CHAIN	KMC e10S NPBK, 1/2 x 11/128
CASSETTE / FREEWHEEL	Sunrace CSMS2 TAY, 10sp, 11-42T
BRAKE	Promax, DSK-925
DISC ROTOR	Promax DSK-925, 180mm, center lock
FRONT HUB	Formula CL-811 for Center Lock, 32h, 15x110mm TA

REAR HUB	Formula CL-1422 Center lock, 32hole, 14G, O.L.D. 135mm AXEL145mm
RIM/WHEELSET	Velomann E-Sport Tubeless Ready 29, 25-622, 32 hole
TIRE	Vittoria e-Randonneur, 50-622
STEM	Velomann 31.8, L70MM
HANDLEBAR	Velomann, 31.8*630 / Rise 34mm / Back Sweep 41°
GRIP / TAPE	Herrmans Grip
SEATPOST	Velomann 31.6*350, suspension seatpost
SADDLE	Velomann, 256x220, 612gr.
PEDALS	VP, axle 7mm boron steel, EPB system, size 112x83,3mm, reflector included
CHAINRING PROTECTOR	ChainGuard 38T PLasticBlack custom for Omnia C-Type
FRONT LIGHT	Spanninga custom integrated light, 40 lux
REAR LIGHT	Spanninga custom integrated light
REAR CARRIER / PLATE	custom rear carrier integrated into the frame design
KICKSTAND	Velomann load 35kg
MUDGUARD / STAY	SKS PET Mudguards A65 R /28
MOTOR UNIT	Bosch Performance Line CX, 250W, 85Nm, Purion display
BATTERY	Bosch Powertube 625Wh integrated battery

E-OMNIA C-TYPE | DEORE 10SP | YTB1E



The image shown is indicative only. Components and graphic detail may differ from actual model. Bianchi reserves the right to amend specifications and/or prices.

COLOR	4G - CK16/Dark celeste full matt 4H - Metal Brown/Graphite full matt 4I - Metal grey/graphite full matt
FRAME	E-OMNIA C-Type chain drive ALU sizes: 45-50-55 - 9x135 mm quick release dropouts (special dropout for external derailleur) - Post mount 180 disc brake type - Internal cable routing in DT - Frame lock compatible - 625Wh compatible - custom rear carrier integrated in the frame design
HEADSET	NO.55R/558 1.5"
FORK	Sram XCM34-Boost NLO DS 29", 120mm travel, 1.5" tapered HT, w/ 15AH2-110 TA, minimum 160mm rotor, maximum 203mm rotor, 34mm stanchions, Coil w/ preload adjuster
SHIFTER	Shimano, SL-M4100-R, DEORE, RIGHT, 10-SPEED
REAR DERAILLEUR	Shimano, RD-M4120, DEORE, SGS 10/11-SPEED
CRANKSET	FSA Metropolis, AL-8/IS FSA Alloy E-bike ISIS Crank, ISIS / 170mm
BOTTOM BRACKET	included in the motor
CHAIN	KMC e10S NPBK
CASSETTE / FREEWHEEL	Sunrace, 10sp, 11-42T
BRAKE	Shimano MT-200
DISC ROTOR	CDM-80FD, 180mm

FRONT HUB	Formula CL-811 for Center Lock, 32h, 15x110mm TA
REAR HUB	Formula CL-1422 Center lock, 32hole, 14G, O.L.D. 135mm AXEL145mm, for Shimano 8/9/10speed with Quick release QR22
RIM/WHEELSET	Velomann Tubeless Ready 29", 25-622
TIRE	Vittoria e-Randonneur, 50-622
STEM	Velomann, diam. 31,8, size: 90mm for SM, 110mm for LG, MD
HANDLEBAR	Velomann, 31.8*630 / Rise 34mm / Back Sweep 41°
GRIP / TAPE	Hermans Grip 130
SEATPOST	Velomann, 31.6*350, suspension seatpost
SADDLE	Velomann, steel rail, 254x183mm
PEDALS	VPE-889P, axle 7mm boron steel, EPB system, size 112x83,3mm, reflector included
FRONT LIGHT	Spanninga custom integrated light, 40 lux
REAR LIGHT	Spanninga custom integrated light
REAR CARRIER / PLATE	custom rear carrier integrated into the frame design
KICKSTAND	Velomann load 35kg
MUDGUARD / STAY	SKS PET Mudguards A65 R /28
MOTOR UNIT	OLI Edge, 90Nm, 250W Display High Vision
BATTERY	Internal battery 630Wh

E SPILLO CITY | ALTUS 1X8SP | YSBT1



The image shown is indicative only. Components and graphic detail may differ from actual model. Bianchi reserves the right to amend specifications and/or prices.

COLOR	SO: Grey Glossy
FRAME	E-Spillo City Step Thru Frame Aluminium O.L.D.139mm for rear hub motor unit, size 45cm
SEATPOST CLAMP	MX27 31.8mm
HEADSET	VP-MH305C Semi-integrated
FORK	Bianchi Steel, V-Brake
SHIFTER	Shimano Altus 8sp
REAR DERAILLEUR	Shimano Altus 8sp
CRANKSET	Prowheel PRA-11C 38T, crank length: 170mm
BOTTOM BRACKET	axle length:124mm, w/speed sensor
CHAIN	Kmc Z8.1 8sp
CASSETTE / FREEWHEEL	Shimano CS-HG200-8, 8sp, 12-14-16-18-21-24-28-32T
BRAKE	V-Brake Alloy
BRAKE LEVER	V-Brake levers 4 fingers
FRONT HUB	Formula FM-21, 36hole, 14G, O.L.D. 100mm, w/QR
REAR HUB	EGoing Rear hub motor unit

RIM/WHEELSET	Spectra 622-19
TIRE	Duramax Regular H-480, Tire sport Pergo 40-622 27TPI
STEM	STQ ALsbbk 25,4/85 180mm 4BOLT MTSD-367N-5 black
HANDLEBAR	HB CITY steel diam.25.4mm,610mm/44°/rise 66mm
GRIP / TAPE	Herrmans Ergo TPE 120 mm
SEATPOST	Alloy, diam 27,2mm, length 300mm
SADDLE	Selle Royal Aurorae
FRONT LIGHT	Breeze Evo Classic, black case, 0,5W LED, 15 lux,
REAR LIGHT	integrated in the battery
KICKSTAND	Atranvelo KS Rex Atran 235
MUDGUARD	Steel
MOTOR UNIT	EGoing Rear hub motor unit 36V,250W,OLD 135MM w/318Wh rear carrier battery

#RIDEBIANCHI

BIANCHI

F.I.V. E BIANCHI S.P.A
VIA DELLE BATTAGLIE, 5 24047 TREVIGLIO / BG

BIANCHI.COM